Set No._____

SPECIFICATIONS
for

VILLAGE OF MAEYSTOWN

PROPOSED CONNECTION
WITH
FOUNTAIN WATER DISTRICT

VILLAGE PRESIDENT

Terryl Walster

VILLAGE BOARD

Carmen Lewis
David Braswell
Carla Coats
Fay Ross
Julie Whitlock
Michele Doerr

Janice Schepees – Village Clerk
Mike Fausz – Village Treasurer

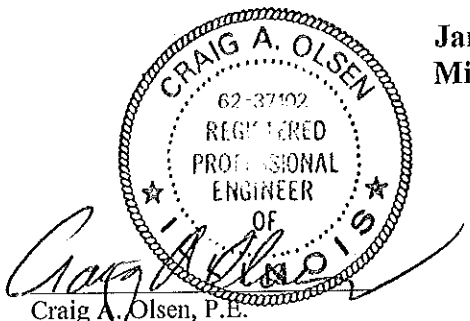

Craig A. Olsen, P.E.
Illinois Register No. 062-037102
Expires: November 30, 2017

DATE: November, 2016
FILE: 40038-403
Design Firm Registration No.: 184-002692
Expires: April 30, 2017

Prepared by:

HENEGHAN & ASSOCIATES, P.C.
ENGINEERS – SURVEYORS
838 East McCord Street
Centralia, IL 62801
(618) 533-6525 Fax: (618) 533-6652

Intentionally Blank

Front End Documents For USDA Projects

Advertisement For Bids	RUS Bulletin 1780-26, Attachment E
Instructions to Bidders	RUS Bulletin 1780-26, Attachment F
Bid Form	RUS Bulletin 1780-26, Attachment G
Bid Bond	EJCDC No. C-430 (2013 Edition)
Notice of Award	EJCDC No. C-510 (2013 Edition)
Agreement Between Owner and Contractor(s)	EJCDC No. C-520 (2013 Edition)
General Conditions	EJCDC No. C-700 (2007 Edition)
Performance Bond	EJCDC No. C-610 (2013 Edition)
Payment Bond	EJCDC No. C-615A (March 2008)
Application for Payment	EJCDC No. C-620 (2013 Edition)
Field Order	Guide 11B, Illinois Instruction 1780
Work Change Directive	Guide 11C, Illinois Instruction 1780
Change Order	EJCDC No. C-941 (2013 Edition)
Notice to Proceed	EJCDC No. C-550 (2013 Edition)
Certificate of Substantial Completion	EJCDC No. C-625 (2013 Edition)
Prevailing Rate of Hourly Wages (when required)	Supplied by Illinois Department of Labor
Certificate of Owner's Attorney and Agency Concurrence	RUS Bulletin 1780-26, Exhibit I
Addendum to Rural Development Supplemental General Conditions (Construction Sign)	1780 Guide 10 (10/22/2014)
Construction Contractors Affirmative Action Goals	1780 Guide 12
Certification Regarding Debarment, Suspension, Ineligibility and Voluntary Exclusion – Lower Tier Covered Transactions	Form AD 1048
Compliance Statement	Form RD 400-6 (Rev. 4-00)
Certification for Contracts, Grants, and Loans	RD Instruction 1940-Q Exhibit A-1
Water & Sewer Line Construction Standards and Policies – IL	1-7
Partial Wavier of Lien	PLW-1
Final Wavier of Lien	FLW-1

* Forms and RUS Bulletins may be found at http://www.usda.gov/rus/water/ees/englib/index.htm
* Illinois Engineering Documents may be found at http://www.rurdev.usda.gov/il/eng.htm

Technical Provisions

Section 14 - General Requirements	14-1 to 14-9
Section 21 - Concrete - Plain and Reinforcement	21-1 to 21-7
Section 31 - Surface Replacement and Site Work	31-1 to 31-24
Section 41 - Installation of Water Main and Appurtenances	41-1 to 41-8
Section 51 - Polyvinyl Chloride (PVC) Water Main	51-1 to 51-6
Section 52 - Restrained-Joint (PVC) Water Main, Rubber Ring Joints	52-1
Section 53 - Ductile Iron Pipe	53-1 to 53-3
Section 54 - Boring Water Mains	54-1 to 54-5
Section 57 - Valves, Hydrants, and Appurtenances	57-1 to 57-5
Section 64 - Master Meter Station	64-1 to 64-24
Section 82 - Electrical	82-1 to 82-5
Section 84 - Telemetry	84-1 to 84-2
Section 111 - Subsurface Investigation and Design-Construction Recommendations	111-1

Permits

County Highway Permit – Monroe County

NPDES Permit (NOT REQUIRED)

NRCS Standard Drawings

Advertisement for Bids

Village of Maeystown
Owner

c/o Terryl Walster, Village President

1030 Mill Street, Maeystown, IL 62256
Address

Separate sealed **Bids** for the construction of:

Proposed Connection with Fountain Water District will be received by Village of Maeystown at the office of the Village located at 1030 Mill Street, Maeystown, IL 62256 until **7:00 PM** prevailing time on **January 11, 2017** and then at said office publicly opened and read aloud.

There will be no Pre-Bid meeting held for this project. The ENGINEER is available at 618-533-6525 Monday thru Friday, 8:00 AM to 4:30 PM or at wfcox@heneghanassoc.com. Arrangements can be made to meet with the ENGINEER if desired prior to bid opening. The site is available for inspection on January 4, 2017 from 10:30 AM until 2:30 PM. The existing plant will be open during that time. The ENGINEER will be on site at the existing treatment plant to answer any questions. In the event of inclement weather an alternate date will be made available. Questions, concerns, etc. may be directed to the ENGINEER at any time via the above email or phone number.

The Contract Documents may be examined at the following locations:

838 East McCord, Centralia, IL 62801

Village of Maeystown, 1030 Mill Street, Maeystown, IL 62256

Southern Illinois Builders Association, 1468 Green Mount Road, O'Fallon, Illinois 62269

Dodge/Agc Plan Room, 6330 Knox Industrial Drive, St. Louis, Missouri 63139

www.dodge.construction.com

Heneghan and Associates Website - http://haengr.com/projects_water.html Note: A payment of ten dollars ($10) to Heneghan and Associates will ensure you will be placed on the plan holders list and receive addendums. Please call 618-533-6525.

Copies of the Contract Documents may be obtained at the Issuing Office, Heneghan and Associates, P.C., located at 838 East McCord, Centralia, IL 62801 upon payment of $80.00 for each set ($90.00 if shipped via UPS).

December 6, 2016
Date

Terryl Walster
President

Intentionally Blank

Instructions to Bidders

TABLE OF ARTICLES

	Page
Article 1 - Defined Terms	1
Article 2 - Copies of Bidding Documents	2
Article 3 - Qualifications of Bidders	2
Article 4 - Examination of Bidding Documents, Other Related Data, and Site	2
Article 5 - Pre-Bid Conference	5
Article 6 - Site and Other Areas	5
Article 7 - Interpretations and Addenda	5
Article 8 - Bid Security	6
Article 9 - Contract Times	6
Article 10 - Liquidated Damages	7
Article 11 - Substitute and "Or-Equal" Items	7
Article 12 - Subcontractors, Suppliers, and Others	7
Article 13 - Preparation of Bid	8
Article 14 - Basis of Bid; Comparison of Bids	9
Article 15 - Submittal of Bid	9
Article 16 - Modification and Withdrawal of Bid	10
Article 17 - Opening of Bids	10
Article 18 - Bids to Remain Subject to Acceptance	10
Article 19 - Evaluation of Bids and Award of Contract	10
Article 20 - Contract Security and Insurance	11
Article 21 - Signing of Agreement	11
Article 22 - Sales and Use Taxes	12
Article 23 - Contracts to be Assigned	12
Article 24 - Wage Rate Requirements	12
Article 25 - Monroe County Licensing Requirements	12

ARTICLE 1 - DEFINED TERMS

1.01 Terms used in these Instructions to Bidders will have the meanings indicated in the General Conditions and Supplementary Conditions. Additional terms used in these Instructions to Bidders have the meanings indicated below:

A. Issuing Office--The office from which the Bidding Documents are to be issued and where the bidding procedures are to be administered.

ARTICLE 2 - COPIES OF BIDDING DOCUMENTS

2.01 Complete sets of the Bidding Documents in the number and for the deposit sum, if any, stated in the Advertisement for Bids may be obtained from the Issuing Office.

The deposit will not be refunded.

2.02 Complete sets of Bidding Documents must be used in preparing Bids; neither Owner nor Engineer assumes any responsibility for errors or misinterpretations resulting from the use of incomplete sets of Bidding Documents.

2.03 Owner and Engineer in making copies of Bidding Documents available on the above terms do so only for the purpose of obtaining Bids for the Work and do not confer a license or grant for any other use.

ARTICLE 3 - QUALIFICATIONS OF BIDDERS

3.01 To demonstrate Bidder's qualifications to perform the Work, within five days of Owner's request, Bidder shall submit written evidence such as financial data, previous experience, present commitments, and such other data as may be called for below.

ARTICLE 4 - EXAMINATION OF BIDDING DOCUMENTS, OTHER RELATED DATA, AND SITE

4.01 Subsurface and Physical Conditions

A. The Supplementary Conditions identify:

1. Those reports of explorations and tests of subsurface conditions at or contiguous to the Site that Engineer has used in preparing the Bidding Documents.

2. Those drawings of physical conditions in or relating to existing surface and subsurface structures at or contiguous to the Site (except Underground Facilities) that Engineer has used in preparing the Bidding Documents.

B. Copies of reports and drawings referenced in paragraph 4.01.A will be made available by Owner to any Bidder on request. Those reports and drawings are not part of the Contract Documents, but the "technical data" contained therein upon which Bidder is entitled to rely as provided in paragraph 4.02 of the General Conditions has been identified and established in paragraph 4.02 of the Supplementary Conditions. Bidder is responsible for any interpretation or conclusion Bidder draws from any "technical data" or any other data, interpretations, opinions, or information contained in such reports or shown or indicated in such drawings.

4.02 Underground Facilities

A. Information and data shown or indicated in the Bidding Documents with respect to existing Underground Facilities at or contiguous to the Site is based upon information and data furnished to Owner and Engineer by owners of such Underground Facilities, including Owner, or others.

4.03 Hazardous Environmental Condition

A. The Supplementary Conditions identify those reports and drawings relating to a Hazardous Environmental Condition identified at the Site, if any, that ENGINEER has used in preparing the Bidding Documents.

B. Copies of reports and drawings referenced in paragraph 4.03.A will be made available by Owner to any Bidder on request. Those reports and drawings are not part of the Contract Documents, but the "technical data" contained therein upon which Bidder is entitled to rely as provided in paragraph 4.06 of the General Conditions has been identified and established in paragraph 4.06 of the Supplementary Conditions. Bidder is responsible for any interpretation or conclusion Bidder draws from any "technical data" or any other data, interpretations, opinions, or information contained in such reports or shown or indicated in such drawings.

4.04 Provisions concerning responsibilities for the adequacy of data furnished to prospective Bidders with respect to subsurface conditions, other physical conditions and Underground Facilities, and possible changes in the Bidding Documents due to differing or unanticipated conditions appear in paragraphs 4.02, 4.03, and 4.04 of the General Conditions. Provisions concerning responsibilities for the adequacy of data furnished to prospective Bidders with respect to a Hazardous Environmental Condition at the Site, if any, and possible changes in the Contract Documents due to any Hazardous Environmental Condition uncovered or revealed at the Site which was not shown or indicated in the Drawings or Specifications or identified in the Contract Documents to be within the scope of the Work appear in paragraph 4.06 of the General Conditions.

4.05 On request, Owner will provide Bidder access to the Site to conduct such examinations, investigations, explorations, tests, and studies as Bidder deems necessary for submission of a Bid. Bidder shall fill all holes and clean up and restore the Site to its former condition upon completion of such explorations, investigations, tests, and studies. Bidder shall comply with all applicable Laws and Regulations relative to locating of excavation and utility.

4.06 Additional Owner Provided Information:

A. Reference is made to Article 7 of the Supplementary Conditions for the identification of the general nature of other work that is to be performed at the Site by Owner or others (such as utilities and other prime contractors) that relates to the Work contemplated by these Bidding Documents. On request, Owner will provide to each Bidder for examination access to or copies of Contract Documents (other than portions thereof related to price) for such other work.

B. Paragraph 6.13.C of the General Conditions states that if an Owner safety program exists it will be noted in the Supplementary Conditions.

4.07 It is the responsibility of each Bidder before submitting a Bid to:

A. Examine and carefully study the Bidding Documents, the other related data identified in the Bidding Documents, and any Addenda;

B. Visit the Site and become familiar with and satisfy Bidder as to the general, local, and Site conditions that may affect cost, progress, and performance of the Work;

C. Become familiar with and satisfy Bidder as to all Federal, State, and local Laws and Regulations that may affect cost, progress, or performance of the Work;

D. Carefully study all: (1) reports of explorations and tests of subsurface conditions at or contiguous to the Site and all drawings of physical conditions in or relating to existing surface or subsurface structures at or contiguous to the Site (except Underground Facilities) which have been identified in the Supplementary Conditions as provided in paragraph 4.02 of the General Conditions, and (2) reports and drawings of Hazardous Environmental Conditions at the Site which have been identified in the Supplementary Conditions as provided in paragraph 4.06 of the General Conditions;

E. Obtain and carefully study (or accept consequences for not doing so) all additional or supplementary examinations, investigations, explorations, tests, studies, and data concerning conditions (surface, subsurface, and Underground Facilities) at or contiguous to the Site which may affect cost, progress, or performance of the Work or which relate to any aspect of the means, methods, techniques, sequences, and procedures of construction to be employed by Bidder, including applying any specific means, methods, techniques, sequences, and procedures of construction expressly required by the Bidding Documents, and safety precautions and programs incident thereto;

F. Agree at the time of submitting its Bid that no further examinations, investigations, explorations, tests, studies, or data are necessary for the determination of its Bid for performance of the Work at the price(s) bid and within the times and in accordance with the other terms and conditions of the Bidding Documents;

G. Become aware of the general nature of the work to be performed by Owner and others at the Site that relates to the Work as indicated in the Bidding Documents;

H. Correlate the information known to Bidder, information and observations obtained from visits to the Site, reports and drawings identified in the Bidding Documents, and all additional examinations, investigations, explorations, tests, studies, and data with the Bidding Documents;

I. Promptly give Engineer written notice of all conflicts, errors, ambiguities, or discrepancies that Bidder discovers in the Bidding Documents and confirm that the written resolution thereof by Engineer is acceptable to Bidder; and

J. Determine that the Bidding Documents are generally sufficient to indicate and convey understanding of all terms and conditions for the performance of the Work.

4.08 The submission of a Bid will constitute an incontrovertible representation by Bidder that Bidder has complied with every requirement of this Article 4, that without exception the Bid is premised upon performing and furnishing the Work required by the Bidding Documents and applying any specific means, methods, techniques, sequences, and procedures of construction that may be shown or indicated or expressly required by the Bidding Documents, that Bidder has given Engineer written notice of all conflicts, errors, ambiguities, and discrepancies that Bidder has discovered in Bidding Documents and the written resolutions thereof by Engineer are acceptable to Bidder, and that the Bidding Documents are generally sufficient to indicate and convey understanding of all terms and conditions for performing and furnishing the Work.

ARTICLE 5 - PRE-BID CONFERENCE

5.01 A pre-Bid conference will not be held for this project. All bidders are encouraged to visit the project site. The ENGINEERS are available to meet with any prospective bidder and to answer any and all questions prior to bidding. Please call the ENGINEER'S office at (618) 533-6525 during the normal office hours of 8:00 A.M. through 4:30 P.M., Monday through Friday. ENGINEER will transmit to all prospective Bidders of record such Addenda as ENGINEERS consider necessary in response to questions arising during the bidding process. The ENGINEERS will have the site available for inspection on January 4, 2017 from 10:30 AM until 2:30 PM, specifically the existing treatment plant where the demolition will occur. The ENGINEERS will be present during this time to answer any questions. Attendance during this time is not mandatory but it is suggested to better view the interior of the building. The building is normally locked as it is an operating water treatment facility.

ARTICLE 6 - SITE AND OTHER AREAS

6.01 The Site is identified in the Bidding Documents. Easements for permanent structures or permanent changes in existing facilities are to be obtained and paid for by Owner unless otherwise provided in the Bidding Documents. All additional lands and access thereto required for temporary construction facilities, construction equipment, or storage of materials and equipment to be incorporated in the Work are to be obtained and paid for by Contractor.

ARTICLE 7 - INTERPRETATIONS AND ADDENDA

7.01 All questions about the meaning or intent of the Bidding Documents are to be submitted to Engineer in writing. Interpretations or clarifications considered necessary by Engineer in response to such questions will be issued by Addenda mailed or delivered to all parties recorded by Engineer as having received the Bidding Documents. Questions received less than five days prior to the date for opening of Bids may not be

answered. Only questions answered by Addenda will be binding. Oral and other interpretations or clarifications will be without legal effect.

7.02 Addenda may be issued to clarify, correct, or change the Bidding Documents as deemed advisable by Owner or Engineer.

7.03 Quantities will be updated and made available to all pre-bid attendees in the form of an updated Bid Form the day of pre-bid. This form will be included in the addenda following the pre-bid meeting and will include any updates as a result of the pre-bid meeting.

7.04 An updated NPDES Permit will be included in the addendum following the pre-bid meeting as the current NPDES included in the bid package was obtained some time ago.

ARTICLE 8 - BID SECURITY

8.01 A Bid must be accompanied by Bid security made payable to Owner in an amount of 5 % of Bidder's maximum Bid price and in the form of a certified check or a Bid bond (EJCDC No. C-430, 2007 Edition) issued by a surety meeting the requirements of paragraphs 5.01 and 5.02 of the General Conditions.

8.02 The Bid security of the Successful Bidder will be retained until such Bidder has executed the Contract Documents, furnished the required contract security and met the other conditions of the Notice of Award, whereupon the Bid security will be returned. If the Successful Bidder fails to execute and deliver the Contract Documents and furnish the required contract security within 21 days after the Notice of Award, Owner may annul the Notice of Award and the Bid security of that Bidder will be forfeited. The Bid security of other Bidders whom Owner believes to have a reasonable chance of receiving the award may be retained by Owner until the earlier of seven days after the Effective Date of the Agreement or 61 days after the Bid opening, whereupon Bid security furnished by such Bidders will be returned.

8.03 Bid security of other Bidders whom OWNER believes do not have a reasonable chance of receiving the award will be returned within seven days after the Bid opening.

ARTICLE 9 - CONTRACT TIMES

9.01 The number of days within which, or the dates by which, the Work is to be substantially completed and ready for final payment are set forth in the Agreement.

ARTICLE 10 - LIQUIDATED DAMAGES

10.01 Provisions for liquidated damages are set forth in the Agreement.

ARTICLE 11 - SUBSTITUTE AND "OR-EQUAL" ITEMS

11.01 The Contract, if awarded, will be on the basis of materials and equipment specified or described in the Bidding Documents, or "or-equal" materials and equipment as defined in paragraph 6.05 of the General Conditions, or those substitute materials and equipment approved by the Engineer and identified by Addendum. The materials and equipment described in the Bidding Documents establish a standard of required type, function and quality to be met by any proposed substitute or "or-equal" item. Request for Engineer's clarification of materials and equipment considered "or-equal" prior to the Effective Date of the Agreement must be received by the Engineer at least 5 days prior to the date for receipt of Bids. No item of material or equipment will be considered by Engineer as a substitute unless written request for approval has been submitted by Bidder and has been received by Engineer at least 15 days prior to the date for receipt of Bids. Each request shall conform to the requirements of paragraph 6.05 of the General Conditions. The burden of proof of the merit of the proposed item is upon the Bidder. Engineer's decision of approval or disapproval of a proposed item will be final. If Engineer approves any proposed substitute item, such approval will be set forth in an Addendum issued to all prospective Bidders. Bidders shall not rely upon approvals made in any other manner.

ARTICLE 12 - SUBCONTRACTORS, SUPPLIERS, AND OTHERS

12.01 If the Supplementary Conditions require the identity of certain Subcontractors, Suppliers, individuals, or entities to be submitted to Owner in advance of a specified date prior to the Effective Date of the Agreement, the apparent Successful Bidder, and any other Bidder so requested, shall within five days after Bid opening, submit to Owner a list of all such Subcontractors, Suppliers, individuals, or entities proposed for those portions of the Work for which such identification is required. Such list shall be accompanied by an experience statement with pertinent information regarding similar projects and other evidence of qualification for each such Subcontractor, Supplier, individual, or entity if requested by Owner. If Owner or Engineer, after due investigation, has reasonable objection to any proposed Subcontractor, Supplier, individual, or entity, Owner may, before the Notice of Award is given, request apparent Successful Bidder to submit a substitute, without an increase in the Bid.

12.02 If apparent Successful Bidder declines to make any such substitution, Owner may award the Contract to the next lowest responsible Bidder that proposes to use acceptable Subcontractors, Suppliers, individuals, or entities. Declining to make requested substitutions will not constitute grounds for forfeiture of the Bid security of

any Bidder. Any Subcontractor, Supplier, individual, or entity so listed and against which Owner and Engineer makes no written objection prior to the giving of the Notice of Award will be deemed acceptable to Owner and Engineer subject to revocation of such acceptance after the Effective Date of the Agreement as provided in paragraph 6.06 of the General Conditions.

12.03 Contractor shall not be required to employ any Subcontractor, Supplier, individual, or entity against whom Contractor has reasonable objection.

12.04 The Contractor shall not award work to Subcontractor(s) in excess of the limits stated in SC 6.06.

ARTICLE 13 - PREPARATION OF BID

13.01 The Bid form is included with the Bidding Documents. Additional copies may be obtained from Engineer.

13.02 All blanks on the Bid form shall be completed in ink and the Bid signed in ink. Erasures or alterations shall be initialed in ink by the person signing the Bid From. A Bid price shall be indicated for each section, Bid item, alternative, adjustment unit price item, lump sum, and unit price item listed therein, or the words "No Bid," "No Change," or "Not Applicable" entered.

13.03 A Bid by a corporation shall be executed in the corporate name by the president or a vice-president or other corporate officer accompanied by evidence of authority to sign. The corporate seal shall be affixed and attested by the secretary or an assistant secretary. The corporate address and state of incorporation shall be provided on the Bid Form.

13.04 A Bid by a partnership shall be executed in the partnership name and signed by a partner (whose title must appear under the signature), accompanied by evidence of authority to sign. The official address of the partnership shall be provided on the Bid Form.

13.05 A Bid by a limited liability company shall be executed in the name of the firm by a member and accompanied by evidence of authority to sign. The state of formation of the firm and the official address of the firm shall be shown.

13.06 A Bid by an individual shall show the Bidder's name and business address.

13.07 A Bid by a joint venture shall be executed by each joint venturer in the manner indicated on the Bid form. The official address of the joint venture must be provided on the Bid Form.

13.08 All names shall be printed in ink below the signatures.

13.09 The Bid shall contain an acknowledgment of receipt of all Addenda, the numbers and dates of which shall be filled in on the Bid form.

13.10 The postal and email addresses and telephone number for communication regarding the

Bid shall be shown.

13.11 The Bid shall contain evidence of Bidder's authority and qualification to do business in the state or locality where the Project is located or Bidder shall covenant in writing to obtain such qualification prior to award of the Contract and attach such covenant to the Bid. Bidder's state contractor license number, if any, shall also be shown on the Bid Form.

ARTICLE 14 - BASIS OF BID; COMPARSION OF BIDS

14.01 Unit Price

A. Bidders shall submit a LUMP SUM BID for Work listed in the Bid schedule.

B. The LUMP SUM BID has been broken down into various areas of work. The entire bid form must be completely filled out at the time the bid is submitted for consideration. The breakdown will be utilized as a basis for the work-in-progress payments. Also the breakdown will be utilized in the event that bids would come in "Over Budget", the OWNER may delete one or more of the items, say one of the Truck Fill Equipment. Award of the project will be based on the "Total" Sum of Lump Sum Bid and any items deleted would be removed after award via "Change Order".

C. Discrepancies between the indicated sum of any column of figures and the correct sum thereof will be resolved in favor of the correct sum. Discrepancies between words and figures will be resolved in favor of the words.

14.02 Allowances

A. For cash allowances the Bid price shall include such amounts as the Bidder deems proper for Contractor's overhead, costs, profit, and other expenses on account of cash allowances, if any, named in the Contract Documents, in accordance with Paragraph 11.02.B of the General Conditions.

ARTICLE 15 - SUBMITTAL OF BID

15.01 With each copy of the Bidding Documents, a Bidder is furnished one separate unbound copy of the Bid Form, and the Bid bond form. The unbound copy of the Bid Form is to be completed and submitted with all the attachments outlined in Article 7 of the Bid Form.

15.02 A Bid shall be submitted no later than the date and time prescribed and at the place indicated in the Advertisement for Bids and shall be enclosed in an opaque sealed envelope plainly marked with the Project title (and, if applicable, the designated portion of the Project for which the Bid is submitted), the name and address of Bidder, and shall be accompanied by the Bid security and other required documents. If a Bid is sent by mail or other delivery system, the sealed envelope containing the Bid shall

be enclosed in a separate envelope plainly marked on the outside with the notation "BID ENCLOSED." When using the mail or other delivery system, the Bidder is totally responsible for the mail or other delivery system delivering the Bid at the place and prior to the time indicated in the Advertisement for Bid. A mailed Bid shall be addressed to Owner at address in Article 1.01 of Bid Form.

ARTICLE 16 - MODIFICATION AND WITHDRAWAL OF BID

16.01 A Bid may be modified or withdrawn by an appropriate document duly executed in the manner that a Bid must be executed and delivered to the place where Bids are to be submitted prior to the date and time for the opening of Bids.

16.02 If within 24 hours after Bids are opened any Bidder files a duly signed written notice with Owner and promptly thereafter demonstrates to the reasonable satisfaction of Owner that there was a material and substantial mistake in the preparation of its Bid, that Bidder may withdraw its Bid, and the Bid security will be returned. Thereafter, if the Work is rebid or negotiated, that Bidder will be disqualified from further bidding on the Work. This provision to withdraw a Bid without forfeiting the Bid security does not apply to Bidder's errors in judgment in preparing the Bid.

ARTICLE 17 - OPENING OF BIDS

17.01 Bids will be opened at the time and place indicated in the Advertisement for Bids and, unless obviously non-responsive, read aloud publicly. An abstract of the amounts of the Bids and major alternates, if any, will be made available to Bidders after the opening of Bids.

ARTICLE 18 - BIDS TO REMAIN SUBJECT TO ACCEPTANCE

18.01 All Bids will remain subject to acceptance for the period of time stated in the Bid Form, but Owner may, at its sole discretion, release any Bid and return the Bid security prior to the end of this period.

ARTICLE 19 - EVALUATION OF BIDS AND AWARD OF CONTRACT

19.01 Owner reserves the right to reject any or all Bids, including without limitation, nonconforming, nonresponsive, unbalanced, or conditional Bids. Owner further reserves the right to reject the Bid of any Bidder whom it finds, after reasonable inquiry and evaluation, to be non-responsible. Owner also reserves the right to waive

all informalities not involving price, time, or changes in the Work and to negotiate contract terms with the Successful Bidder.

19.02 More than one Bid for the same Work from an individual or entity under the same or different names will not be considered. Reasonable grounds for believing that any Bidder has an interest in more than one Bid for the Work may be cause for disqualification of that Bidder and the rejection of all Bids in which that Bidder has an interest.

19.03 In evaluating Bids, Owner will consider whether or not the Bids comply with the prescribed requirements, and such alternates, unit prices and other data, as may be requested in the Bid Form or prior to the Notice of Award.

19.04 In evaluating Bidders, Owner will consider the qualifications of Bidders and may consider the qualifications and experience of Subcontractors, Suppliers, and other individuals or entities proposed for those portions of the Work for which the identity of Subcontractors, Suppliers, and other individuals or entities must be submitted as provided in the Supplementary Conditions.

19.05 Owner may conduct such investigations as Owner deems necessary to establish the responsibility, qualifications, and financial ability of Bidders, proposed Subcontractors, Suppliers, individuals, or entities to perform the Work in accordance with the contract Documents.

19.06 If the Contract is to be awarded, Owner will award the Contract to the responsible Bidder whose Bid, conforming with all the material terms and conditions of the Instructions to Bidders, is lowest, price and other factors considered. If detailed in the bid form, factors such as discounts, transportation costs, and life cycle costs may be used to determine which bidder, if any, is to be offered the award.

ARTICLE 20 - CONTRACT SECURITY AND INSURANCE

20.01 Article 5 of the General Conditions, as may be modified by the Supplementary Conditions, sets forth Owner's requirements as to performance and payment bonds and insurance. When the Successful Bidder delivers the executed Agreement to Owner, it shall be accompanied by such bonds.

ARTICLE 21 - SIGNING OF AGREEMENT

21.01 When Owner gives a Notice of Award to the Successful Bidder, it shall be accompanied by the required number of unsigned counterparts of the Agreement with the other Contract Documents which are identified in the Agreement as attached thereto. Within 15 days thereafter, Successful Bidder shall sign and deliver the required number of counterparts of the Agreement and attached documents to Owner. Owner shall deliver one fully signed counterpart to Successful Bidder with a complete set of the Drawings with appropriate identification at loan closing. It is anticipated

that loan closing will occur within ninety (90) days after the Owner gives a Notice of Award.

21.02 This Contract is expected to be funded in whole with funds provided by the United States Department of Agriculture, Rural Development (RD). Refer to General Conditions for Federal requirements.

21.03 Concurrence by RD in the award of the Contract is required before the Contract is effective.

ARTICLE 22 - SALES AND USE TAXES

22.01 The Village of Maeystown is an Illinois municipality, thus exempt from Illinois state sales and use taxes.

ARTICLE 23 - CONTRACTS TO BE ASSIGNED

****

Not Applicable.

ARTICLE 24 - WAGE RATE REQUIREMENTS

24.01 The prevailing wage rates of the State of Illinois apply to this contract as do any requirements of the State of Illinois associated with the use of these State Prevailing wages.

24.02 The prevailing wage rates of the Illinois Department of Labor apply to this project. The Labor Standards Provisions found at 29 CFR 5.5(a) apply to this project if the prevailing wage rates of the Department of Labor apply. If the contract cost is in excess of $100,000, provisions of the Contract Work Hours and Safety Standards Act at 29 CFR 5.5(b) also apply.

24.03 A special provision later in this specification will replace wage rates listed in 24.01 and 24.02(when applicable).

ARTICLE 25 – MONROE COUNTY LICENSING REQUIREMENTS

25.01 All Monroe County Licensing requirements are available at www.monroecountyil.org.

25.02 The OWNER will provide the Building Permit.

25.03 The CONTRACTOR shall obtain and provide the Electrical Permit. The CONTRACTOR must provide the name of the electrical contractor that will do the work at the pre-construction meeting at a minimum.

Bid Form

Project Identification: Proposed Connection with Fountain Water District

Contract Identification and Number: H & A Job No. 40038-403

TABLE OF ARTICLES

	Page
Article 1 - Bid Recipient	1
Article 2 - Bidder's Acknowledgments	1
Article 3 - Bidder's Representations	2
Article 4 – Bidder's Certification	3
Article 5 - Basis of Bid	4
Article 6 - Time of Completion	6
Article 7 - Attachments to Bid	6
Article 8 - Defined Terms	7
Article 9 - Bid Submittal	7

ARTICLE 1 – BID RECIPIENT

1.01 This Bid Is Submitted To: Village of Maeystown, 1030 Mill Street, Maeystown, IL 62256. The undersigned Bidder proposes and agrees, if this Bid is accepted, to enter into an Agreement with Owner in the form included in the Bidding Documents to perform all Work as specified or indicated in the Bidding Documents for the prices and within the times indicated in the Bid and in accordance with the other terms and conditions of the Bidding Documents.

ARTICLE 2 – BIDDER'S ACKNOWLEDGMENTS

2.01 Bidder accepts all of the terms and conditions of the Advertisement and Instructions to Bidders, including without limitations those dealing with the dispositions of Bid security. The Bid will remain subject to acceptance for 90 days after the Bid opening, or for such longer period of time that Bidder may agree to in writing upon request of Owner.

ARTICLE 3 – BIDDER'S REPRESENTATIONS

3.01 In submitting this Bid, Bidder represents that:

A. Bidder has examined and carefully studied the Bidding Documents, the other related data identified in the Bidding Documents, and the following Addenda, receipt of which is hereby acknowledged:

Addendum No.	Addendum Date
_____	_____
_____	_____
_____	_____
_____	_____
_____	_____

B. Bidder has visited the Site and become familiar with and is satisfied as to the general, local, and Site conditions that may affect cost, progress, and performance of the Work.

C. Bidder is familiar with and is satisfied as to all Federal, state, and local Laws and Regulations that may affect cost, progress, and performance of the Work.

D. Bidder has carefully studied all: (1) reports of explorations and tests of subsurface conditions at or contiguous to the Site and all drawings of physical conditions in or relating to existing surface or subsurface structures at or contiguous to the Site (except Underground Facilities) which have been identified in SC-4.02, and (2) reports and drawings of Hazard Environmental Conditions, if any, at the Site that have been identified in SC-4.06 as containing reliable "technical data."

E. Bidder has considered the information known to Bidder; information commonly known to contractors doing business in the locality of the Site; information and observations obtained from visits to the Site; the Bidding Documents; and the Site-related reports and drawings identified in the Bidding Documents, with respect to the effect of such information, observations, and documents on (1) the cost, progress, and performance of the Work; (2) the means, methods, techniques, sequences, and procedures of construction to be employed by Bidder, including applying the specific means, methods, techniques, sequences, and procedures of construction expressly required by the Bidding Documents; and (3) Bidder's safety precautions and programs.

F. Based on the information and observations referred to in Paragraph 3.01.E above, bidder does not consider that any further examinations, investigations, explorations, tests, studies, or data are necessary for the determination of this Bid for performance of the Work at the price(s) bid and within the times and in accordance with the other terms and conditions of the Bidding Documents.

G. Bidder is aware of the general nature of the Work to be performed by Owner and others at the Site that relates to the Work as indicated in the Bidding Documents.

H. Bidder has given Engineer written notice of all conflicts, errors, ambiguities, or discrepancies that Bidder has discovered in the Bidding Documents, and the written resolution thereof by Engineer is acceptable to Bidder.

I. The Bidding Documents are generally sufficient to indicate and convey understanding of all terms and conditions for the performance of the Work for which this Bid is submitted.

J. Bidder will submit written evidence of its authority to do business in the State or other jurisdiction where the Project is located not later than the date of its execution of the Agreement.

ARTICLE 4 – BIDDER'S CERTIFICATION

4.01 Bidder further represents that:

A. This Bid is genuine and not made in the interest of or on the behalf of any undisclosed individual or entity and is not submitted in conformity with any agreement or rules of any group, association, organization, or corporation;

B. Bidder has not directly or indirectly induced or solicited any other Bidder to submit a false or sham Bid;

C. Bidder has not solicited or induced any individual or entity to refrain from bidding; and

D. Bidder has not engaged in corrupt, fraudulent, collusive, or coercive practices in competing for the Contract. For the purposes of this Paragraph 4.01.D:

1. "corrupt practice" means the offering, giving, receiving, or soliciting of any thing of value likely to influence the action of a public official in the bidding process;

2. "fraudulent practice" means an intentional misrepresentation of facts made (a) to influence the bidding process to the detriment of Owner, (b) to establish bid prices at artificial non-competitive levels, or (c) to deprive Owner of the benefits of free and open competition;

3. "collusive practice" means a scheme or arrangement between two or more Bidders, with or without the knowledge of Owner, a purpose of which is to establish bid prices at artificial, non-competitive levels; and

4. "coercive practice" means harming or threatening to harm, directly or indirectly, persons or their property to influence their participation in the bidding process or affect the execution of the Contract.

ARTICLE 5 – BASIS OF BID

5.01 Bidder will complete the Work in accordance with the Contract Documents for the following **LUMP SUM PRICE**:

ITEM NO.	DESCRIPTION	LUMP SUM PRICE
1.	Insurance , Bonding	
2.	Mobilization	
3.	Proposed Master Meter Building Foundation	
4.	Proposed Master Meter Building Superstructure	
5.	Proposed Master Meter Building Piping & Appurtenances	
6.	Proposed Master Meter Building Chemical Feed Equipment	
7.	Proposed Controls (Maeystown)	
8.	Proposed Electrical (Master Meter Station)	
9.	Proposed Electrical (Existing Treatment Plant Building)	
10.	Piping & Equipment Demolition (Existing Treatment Plant Building)	
11.	New Piping, Truck Fill Equipment, etc. at Existing Treatment Plant Building	
12.	New Piping Truck Fill Equipment, etc. at Existing Truck Fill Building at Master Meter/Tank Site	
13.	Site Work at Proposed Master Meter Building	
14.	Site Work at Existing Treatment Plant Building	
15.	Well Plugging	
16.	Start Up	
17.	Miscellaneous	
18.	Demobilization, Clean-Up, etc.	
	TOTAL LUMP SUM PRICE BID	

LUMP SUM BID PRICE _____ (**$**_____)
(use words) (numerals)

ARTICLE 6 – TIME OF COMPLETION

6.01 Bidder agrees that the Work will be substantially complete and will be completed and ready for final payment in accordance with paragraph 14.07 of the General Conditions on or before the dates or within the number of calendar days indicated in the Agreement.

6.02 Bidder accepts the provisions of the Agreement as to liquidated damage.

ARTICLE 7 – ATTACHEMENTS TO THIS BID

7.01 The following documents are attached to and made a condition of the Bid:

A. Required Bid security in the form of a Bid Bond (EJCDC No. C-430);

B. List of Proposed Subcontractors;

C. List of Proposed Suppliers;

D. List of Project References;

E. Evidence of authority to do business in the state or jurisdiction of the Project; or a written covenant to obtain such license within the time frame for acceptance of Bids;

F. Required Bidder Qualification Statement with Supporting Data; and

G. If Bid amount exceeds $10,000, signed Compliance Statement (RD 400-6). Refer to specific equal opportunity requirements set forth in paragraph 18.10 of the General Conditions;

H. If Bid amount exceeds $25,000, signed Certification Regarding Debarment, Suspension, Ineligibility and Voluntary Exclusion - Lower Tier Covered Transactions (AD-1048);

I. If Bid amount exceeds $100,000, signed RD Instruction 1940-Q, Exhibit A-1, Certification for Contracts, Grants, and Loans.

ARTICLE 8 – DEFINED TERMS

8.01 The terms used in this Bid with the initial capital letters have the meanings indicated in the Instructions to Bidders, the General Conditions, and the Supplementary Conditions.

ARTICLE 9 – BID SUBMITTAL

9.01 This Bid is submitted by:

If Bidder is:

An Individual

Name (typed or printed): _____ SEAL, if required by State

By: _____

(Individual's signature)

Doing business as:

_____

A Partnership

Partnership Name: _____ SEAL, if required by State

By: _____

(Signature of general partner -- attach evidence of authority to sign)

Name (typed or printed):

_____

A Corporation

Corporation Name:

_____

State Incorporation: _____

Type (General Business, Profession, Service, Limited Liability): _____

_____

By: _____

(Signature -- attach evidence of authority to sign)

Name (typed or printed): _____

Title: _____

CORPORATE SEAL, if required by State

Attest _____

(Signature of Corporate Secretary)

Date of Qualification to do business in _____ [State where Project is located] is ___/___/_____

A Joint Venture

Name of Joint Venture:

_____

First Joint Venture Name: _____

SEAL, if required by State

By: _____

(Signature of joint venture partner -- attach evidence of authority to sign)

Name (typed or printed):

_____

Title: _____

Second Joint Venture Name:

_____

SEAL, if required by State

By: _____

(Signature of joint venture partner -- attach evidence of authority to sign)

Name (typed or printed):

_____

Title: _____

(Each joint venturer must sign. The manner of signing for each individual, partnership, and corporation that is party to the venture should be in the manner indicated above.)

Bidder's Business address: _____

_____

Business Phone No. (_____)_____

Business FAX No. (_____)_____

Business E-Mail Address

_____

State Contractor License No. _____. (If applicable)

Employer's Tax ID No. _____

Phone and FAX Numbers, and Address for receipt of official communications, if different from Business contact information:

_____

_____

9.02 Bid submitted on _____, 20___.

BID BOND

Any singular reference to Bidder, Surety, Owner or other party shall be considered plural where applicable.

BIDDER *(Name and Address)*:

SURETY *(Name, and Address of Principal Place of Business)*:

OWNER *(Name and Address)*:
Village of Maeystown
1030 Mill Street, Maeystown, IL 62256

BID
Bid Due Date:
Description *(Project Name— Include Location)*: **Proposed Connection with Fountain Water District**

BOND
Bond Number:
Date:
Penal sum _____ $ _____
(Words) (Figures)

Surety and Bidder, intending to be legally bound hereby, subject to the terms set forth below, do each cause this Bid Bond to be duly executed by an authorized officer, agent, or representative.

BIDDER	**SURETY**
_____ (Seal)	_____ (Seal)
Bidder's Name and Corporate Seal	Surety's Name and Corporate Seal
By: _____	By: _____
Signature	Signature (Attach Power of Attorney)
_____	_____
Print Name	Print Name
_____	_____
Title	Title
Attest: _____	Attest: _____
Signature	Signature
Title	Title

Note: Addresses are to be used for giving any required notice.
Provide execution by any additional parties, such as joint venturers, if necessary.

1. Bidder and Surety, jointly and severally, bind themselves, their heirs, executors, administrators, successors, and assigns to pay to Owner upon default of Bidder the penal sum set forth on the face of this Bond. Payment of the penal sum is the extent of Bidder's and Surety's liability. Recovery of such penal sum under the terms of this Bond shall be Owner's sole and exclusive remedy upon default of Bidder.

2. Default of Bidder shall occur upon the failure of Bidder to deliver within the time required by the Bidding Documents (or any extension thereof agreed to in writing by Owner) the executed Agreement required by the Bidding Documents and any performance and payment bonds required by the Bidding Documents.

3. This obligation shall be null and void if:

3.1 Owner accepts Bidder's Bid and Bidder delivers within the time required by the Bidding Documents (or any extension thereof agreed to in writing by Owner) the executed Agreement required by the Bidding Documents and any performance and payment bonds required by the Bidding Documents, or

3.2 All Bids are rejected by Owner, or

3.3 Owner fails to issue a Notice of Award to Bidder within the time specified in the Bidding Documents (or any extension thereof agreed to in writing by Bidder and, if applicable, consented to by Surety when required by Paragraph 5 hereof).

4. Payment under this Bond will be due and payable upon default of Bidder and within 30 calendar days after receipt by Bidder and Surety of written notice of default from Owner, which notice will be given with reasonable promptness, identifying this Bond and the Project and including a statement of the amount due.

5. Surety waives notice of any and all defenses based on or arising out of any time extension to issue Notice of Award agreed to in writing by Owner and Bidder, provided that the total time for issuing Notice of Award including extensions shall not in the aggregate exceed 120 days from the Bid due date without Surety's written consent.

6. No suit or action shall be commenced under this Bond prior to 30 calendar days after the notice of default required in Paragraph 4 above is received by Bidder and Surety and in no case later than one year after the Bid due date.

7. Any suit or action under this Bond shall be commenced only in a court of competent jurisdiction located in the state in which the Project is located.

8. Notices required hereunder shall be in writing and sent to Bidder and Surety at their respective addresses shown on the face of this Bond. Such notices may be sent by personal delivery, commercial courier, or by United States Registered or Certified Mail, return receipt requested, postage pre-paid, and shall be deemed to be effective upon receipt by the party concerned.

9. Surety shall cause to be attached to this Bond a current and effective Power of Attorney evidencing the authority of the officer, agent, or representative who executed this Bond on behalf of Surety to execute, seal, and deliver such Bond and bind the Surety thereby.

10. This Bond is intended to conform to all applicable statutory requirements. Any applicable requirement of any applicable statute that has been omitted from this Bond shall be deemed to be included herein as if set forth at length. If any provision of this Bond conflicts with any applicable statute, then the provision of said statute shall govern and the remainder of this Bond that is not in conflict therewith shall continue in full force and effect.

11. The term "Bid" as used herein includes a Bid, offer, or proposal as applicable.

EJCDC
ENGINEERS JOINT CONTRACT DOCUMENTS COMMITTEE

NOTICE OF AWARD

Date of Issuance:

Owner:	Village of Maeystown	Owner's Contract No.:	
Engineer:	Heneghan and Associates, P.C.	Engineer's Project No.:	40038-403
Project:	Proposed Connection with Fountain Water District	Contract Name:	

Bidder:

Bidder's Address:

TO BIDDER:

You are notified that Owner has accepted your Bid dated _____ for the above Contract, and that you are the Successful Bidder and are awarded a Contract for:

{PROJECT} Proposed Connection with Fountain Water District _____

The Contract Price of the awarded Contract is: $_____ *[note if subject to unit prices, or cost-plus]*

Five (5) unexecuted counterparts of the Agreement accompany this Notice of Award, and one copy of the Contract Documents accompanies this Notice of Award, or has been transmitted or made available to Bidder electronically.

4 sets of the Drawings will be delivered separately from the other Contract Documents.

You must comply with the following conditions precedent within 15 days of the date of receipt of this Notice of Award:

1. Deliver to Owner 5 Five counterparts of the Agreement, fully executed by Bidder.
2. Deliver with the executed Agreement(s) the Contract security performance and payment bonds and insurance documentation as specified in the Instructions to Bidders and General Conditions, Articles 2 and 6.
3. Other conditions precedent (if any):

Failure to comply with these conditions within the time specified will entitle Owner to consider you in default, annul this Notice of Award, and declare your Bid security forfeited.

Within ten days after you comply with the above conditions, Owner will return to you one fully executed counterpart of the Agreement, together with any additional copies of the Contract Documents as indicated in Paragraph 2.02 of the General Conditions.

Owner**:**

Authorized Signature

By:

Title:

Copy: Engineer

Intentionally Blank

AGREEMENT
BETWEEN OWNER AND CONTRACTOR
FOR CONSTRUCTION CONTRACT (STIPULATED PRICE)

THIS AGREEMENT is by and between Village of Maeystown ("Owner") and

_____ ("Contractor").

Owner and Contractor hereby agree as follows:

ARTICLE 1 – WORK

1.01 Contractor shall complete all Work as specified or indicated in the Contract Documents. The Work is generally described as follows:

ARTICLE 2 – THE PROJECT

2.01 The Project, of which the Work under the Contract Documents is a part, is generally described as follows: {PROJECT} Proposed Phase V Water Distribution System Improvements – Contract J.

ARTICLE 3 – ENGINEER

3.01 The Project has been designed by Heneghan and Associates, P.C.

3.02 The Owner has retained Heneghan and Associates, P.C. ("Engineer") to act as Owner's representative, assume all duties and responsibilities, and have the rights and authority assigned to Engineer in the Contract Documents in connection with the completion of the Work in accordance with the Contract Documents.

ARTICLE 4 – CONTRACT TIMES

4.01 *Time of the Essence*

A. All time limits for Milestones, if any, Substantial Completion, and completion and readiness for final payment as stated in the Contract Documents are of the essence of the Contract.

4.02 *Days to Achieve Substantial Completion and Final Payment*

The Work will be substantially completed within **200 calendar** days after the date when the Contract Times commence to run as provided in Paragraph 2.03 of the General Conditions and completed (including all rough cleanup and rough landscape restoration) and ready for final payment in accordance with Paragraph 14.07 of the General Conditions by _____.

Furthermore, all demolition work, final clean up and final restoration work shall be accomplished as a significant milestone within **180 calendar** days after the date when the Contract Times

Copyright © 2013 National Society of Professional Engineers, American Council of Engineering Companies, and American Society of Civil Engineers. All rights reserved.

4.03 *Liquidated Damages*

A. Contractor and Owner recognize that time is of the essence as stated in Paragraph 4.01 above and that Owner will suffer financial and other losses if the Work is not completed and Milestones not achieved within the times specified in Paragraph 4.02 above, plus any extensions thereof allowed in accordance with the Contract. The parties also recognize the delays, expense, and difficulties involved in proving in a legal or arbitration proceeding the actual loss suffered by Owner if the Work is not completed on time. Accordingly, instead of requiring any such proof, Owner and Contractor agree that as liquidated damages for delay (but not as a penalty):

1. Substantial Completion: Contractor shall pay Owner $800.00 or actual damages whichever is greater for each day that expires after the time (as duly adjusted pursuant to the Contract) specified in Paragraph 4.02.A above for Substantial Completion until the Work is substantially complete.

2. Completion of Remaining Work: After Substantial Completion, if Contractor shall neglect, refuse, or fail to complete the remaining Work within the Contract Time (as duly adjusted pursuant to the Contract) for completion and readiness for final payment, Contractor shall pay Owner $600.00 or actual damages whichever is greater for each day that expires after such time until the Work is completed and ready for final payment.

3. Liquidated damages for failing to timely attain Substantial Completion and final completion are not additive and will not be imposed concurrently.

4. Milestones: Not Applicable.

ARTICLE 5 – CONTRACT PRICE

5.01 Owner shall pay Contractor for completion of the Work in accordance with the Contract Documents the amounts that follow, subject to adjustment under the Contract:

A. For all Unit Price Work, an amount equal to the sum of the extended prices (established for each separately identified item of Unit Price Work by multiplying the unit price times the actual quantity of that item) the Total Estimated Amount of _____ _____ $ _____
Words
Numbers

B. For all Work, at the prices stated in Contractor's Bid, attached hereto as an exhibit.

ARTICLE 6 – PAYMENT PROCEDURES

6.01 *Submittal and Processing of Payments*

A. Contractor shall submit Applications for Payment in accordance with Article 15 of the General Conditions. Applications for Payment will be processed by Engineer as provided in the General Conditions.

6.02 *Progress Payments; Retainage*

A. Owner shall review and act on the Contractor's Application for Payment at the Owner's Board Meeting on or about the 1st Monday of each month, unless otherwise directed by

Copyright © 2013 National Society of Professional Engineers, American Council of Engineering Companies, and American Society of Civil Engineers. All rights reserved.

the Owner and/or Engineer. Owner shall make progress payments on account of the Contract Price on the basis of the approved Contractor's Application for Payment on or about _____ days after the Owner's Board Meeting. Contractor shall submit his Application for Payment to the Engineer at least 7 days prior to the Owner's Board Meeting.

1. Prior to Substantial Completion, progress payments will be made in an amount equal to the percentage indicated below but, in each case, less the aggregate of payments previously made and less such amounts as Engineer may determine or Owner may withhold, including but not limited to liquidated damages, in accordance with Paragraph 14.02 of the General Conditions:

    a. 90 percent of Work completed (with the balance being retainage) less 8% of the Contractors Bid Price for PVC Pipe which shall be retained for cleanup and restoration of the water lines; and

    b. 90 percent of cost of materials and equipment not incorporated in the Work (with the balance being retainage).

2. Upon reaching Fifty Percent Completion, Owner MAY pay, at their sole discretion 100% of all pay requests from the 50% completion mark forward, except for the 8% retainage of the Contractors price for PVC pipe which shall be retained for cleanup and restoration of the pipeline, such that upon reaching substantial completion the Owner shall still retain an amount sufficient to allow the total payments to Contractor to not exceed 95 percent of the Work, less the 8% of the Contractors bid price for PVC that has been retained for cleanup and restoration of the water line completed, less such amounts as Engineer shall determine in accordance with Paragraph 14.02.B.5 of the General Conditions.

B. Upon Substantial Completion, Owner shall pay an amount sufficient to increase total payments to Contractor to 95 percent of the Work completed, less such amounts set off by Owner pursuant to Paragraph 15.01.E of the General Conditions, and less 200 percent of Engineer's estimate of the value of Work to be completed or corrected as shown on the punch list of items to be completed or corrected prior to final payment.

6.03 *Final Payment*

A. Upon final completion and acceptance of the Work in accordance with Paragraph 15.06 of the General Conditions, Owner shall pay the remainder of the Contract Price as recommended by Engineer as provided in said Paragraph 15.06.

ARTICLE 7 – INTEREST

7.01 All amounts not paid when due shall bear interest at the maximum legal rate.

ARTICLE 8 – CONTRACTOR'S REPRESENTATIONS

8.01 In order to induce Owner to enter into this Contract, Contractor makes the following representations:

A. Contractor has examined and carefully studied the Contract Documents, and any data and reference items identified in the Contract Documents.

Copyright © 2013 National Society of Professional Engineers, American Council of Engineering Companies, and American Society of Civil Engineers. All rights reserved.

B. Contractor has visited the Site, conducted a thorough, alert visual examination of the Site and adjacent areas, and become familiar with and is satisfied as to the general, local, and Site conditions that may affect cost, progress, and performance of the Work.

C. Contractor is familiar with and is satisfied as to all Laws and Regulations that may affect cost, progress, and performance of the Work.

D. Contractor has carefully studied all: (1) reports of explorations and tests of subsurface conditions at or adjacent to the Site and all drawings of physical conditions relating to existing surface or subsurface structures at the Site that have been identified in the Supplementary Conditions, especially with respect to Technical Data in such reports and drawings, and (2) reports and drawings relating to Hazardous Environmental Conditions, if any, at or adjacent to the Site that have been identified in the Supplementary Conditions, especially with respect to Technical Data in such reports and drawings.

E. Contractor has considered the information known to Contractor itself; information commonly known to contractors doing business in the locality of the Site; information and observations obtained from visits to the Site; the Contract Documents; and the Site-related reports and drawings identified in the Contract Documents, with respect to the effect of such information, observations, and documents on (1) the cost, progress, and performance of the Work; (2) the means, methods, techniques, sequences, and procedures of construction to be employed by Contractor; and (3) Contractor's safety precautions and programs.

F. Based on the information and observations referred to in the preceding paragraph, Contractor agrees that no further examinations, investigations, explorations, tests, studies, or data are necessary for the performance of the Work at the Contract Price, within the Contract Times, and in accordance with the other terms and conditions of the Contract.

G. Contractor is aware of the general nature of work to be performed by Owner and others at the Site that relates to the Work as indicated in the Contract Documents.

H. Contractor has given Engineer written notice of all conflicts, errors, ambiguities, or discrepancies that Contractor has discovered in the Contract Documents, and the written resolution thereof by Engineer is acceptable to Contractor.

I. The Contract Documents are generally sufficient to indicate and convey understanding of all terms and conditions for performance and furnishing of the Work.

J. Contractor's entry into this Contract constitutes an incontrovertible representation by Contractor that without exception all prices in the Agreement are premised upon performing and furnishing the Work required by the Contract Documents.

ARTICLE 9 – CONTRACT DOCUMENTS

9.01 *Contents*

A.

B. The Contract Documents consist of the following:

1. This Agreement (pages 1 to 7, inclusive).
2. Performance bond (pages 1 to 3, inclusive).
3. Payment bond (pages 1 to 3, inclusive).

Copyright © 2013 National Society of Professional Engineers, American Council of Engineering Companies, and American Society of Civil Engineers. All rights reserved.

4. General Conditions (pages 700-1 to 700-69, inclusive).
5. Supplementary Conditions (pages N/A to , inclusive).
6. Specifications as listed in the table of contents of the Project Manual.
7. Drawings (not attached but incorporated by reference) consisting of sheets with each sheet bearing the following general title: **[or]** the Drawings listed on the attached sheet index.
8. Addenda (numbers to , inclusive).
9. Exhibits to this Agreement (enumerated as follows):
   a. Contractor's Bid (pages 410-1 to 410-10, inclusive).
   b. Documentation submitted by Contractor prior to Notice of Award.
10. The following which may be delivered or issued on or after the Effective Date of the Contract and are not attached hereto:
    a. Notice to Proceed.
    b. Work Change Directives.
    c. Change Orders.
    d. Field Orders.

C. The documents listed in Paragraph 9.01.A are attached to this Agreement (except as expressly noted otherwise above).

D. There are no Contract Documents other than those listed above in this Article 9.

E. The Contract Documents may only be amended, modified, or supplemented as provided in the General Conditions.

ARTICLE 10 – MISCELLANEOUS

10.01 *Terms*

A. Terms used in this Agreement will have the meanings stated in the General Conditions and the Supplementary Conditions.

10.02 *Assignment of Contract*

A. Unless expressly agreed to elsewhere in the Contract, no assignment by a party hereto of any rights under or interests in the Contract will be binding on another party hereto without the written consent of the party sought to be bound; and, specifically but without limitation, money that may become due and money that is due may not be assigned without such consent (except to the extent that the effect of this restriction may be limited by law), and unless specifically stated to the contrary in any written consent to an assignment, no assignment will release or discharge the assignor from any duty or responsibility under the Contract Documents.

10.03 *Successors and Assigns*

A. Owner and Contractor each binds itself, its successors, assigns, and legal representatives to the other party hereto, its successors, assigns, and legal representatives in respect to all covenants, agreements, and obligations contained in the Contract Documents.

Copyright © 2013 National Society of Professional Engineers, American Council of Engineering Companies, and American Society of Civil Engineers. All rights reserved.

10.04 *Severability*

A. Any provision or part of the Contract Documents held to be void or unenforceable under any Law or Regulation shall be deemed stricken, and all remaining provisions shall continue to be valid and binding upon Owner and Contractor, who agree that the Contract Documents shall be reformed to replace such stricken provision or part thereof with a valid and enforceable provision that comes as close as possible to expressing the intention of the stricken provision.

10.05 *Contractor's Certifications*

A. Contractor certifies that it has not engaged in corrupt, fraudulent, collusive, or coercive practices in competing for or in executing the Contract. For the purposes of this Paragraph 10.05:

1. "corrupt practice" means the offering, giving, receiving, or soliciting of any thing of value likely to influence the action of a public official in the bidding process or in the Contract execution;

2. "fraudulent practice" means an intentional misrepresentation of facts made (a) to influence the bidding process or the execution of the Contract to the detriment of Owner, (b) to establish Bid or Contract prices at artificial non-competitive levels, or (c) to deprive Owner of the benefits of free and open competition;

3. "collusive practice" means a scheme or arrangement between two or more Bidders, with or without the knowledge of Owner, a purpose of which is to establish Bid prices at artificial, non-competitive levels; and

4. "coercive practice" means harming or threatening to harm, directly or indirectly, persons or their property to influence their participation in the bidding process or affect the execution of the Contract.

10.06 *Other Provisions*

A. Owner stipulates that if the General Conditions that are made a part of this Contract are based on EJCDC® C-700, Standard General Conditions for the Construction Contract, published by the Engineers Joint Contract Documents Committee®, and if Owner is the party that has furnished said General Conditions, then Owner has plainly shown all modifications to the standard wording of such published document to the Contractor, through a process such as highlighting or "track changes" (redline/strikeout), or in the Supplementary Conditions.

Copyright © 2013 National Society of Professional Engineers, American Council of Engineering Companies, and American Society of Civil Engineers. All rights reserved.

IN WITNESS WHEREOF, Owner and Contractor have signed this Agreement.

This Agreement will be effective on _____ (which is the Effective Date of the Contract).

OWNER:	CONTRACTOR:
_____	_____
By: _____	By: _____
Title: _____	Title: _____
	(If Contractor is a corporation, a partnership, or a joint venture, attach evidence of authority to sign.)
Attest: _____	Attest: _____
Title: _____	Title: _____
Address for giving notices:	Address for giving notices:
_____	_____
_____	_____
_____	_____
	License No.: _____ *(where applicable)*

(If Owner is a corporation, attach evidence of authority to sign. If Owner is a public body, attach evidence of authority to sign and resolution or other documents authorizing execution of this Agreement.)

Copyright © 2013 National Society of Professional Engineers, American Council of Engineering Companies, and American Society of Civil Engineers. All rights reserved.

Intentionally Blank

This document has important legal consequences; consultation with an attorney is encouraged with respect to its use or modification. This document should be adapted to the particular circumstances of the contemplated Project and the controlling Laws and Regulations.

STANDARD GENERAL CONDITIONS OF THE CONSTRUCTION CONTRACT

Prepared by

ENGINEERS JOINT CONTRACT DOCUMENTS COMMITTEE

and

Issued and Published Jointly by

ACEC
AMERICAN COUNCIL OF ENGINEERING COMPANIES

THE ASSOCIATED GENERAL CONTRACTORS OF AMERICA
SKILL RESPONSIBILITY INTEGRITY

ASCE American Society of Civil Engineers

PE National Society of Professional Engineers
Professional Engineers in Private Practice

AMERICAN COUNCIL OF ENGINEERING COMPANIES

ASSOCIATED GENERAL CONTRACTORS OF AMERICA

AMERICAN SOCIETY OF CIVIL ENGINEERS

PROFESSIONAL ENGINEERS IN PRIVATE PRACTICE
A Practice Division of the
NATIONAL SOCIETY OF PROFESSIONAL ENGINEERS

Endorsed by

CSI

CONSTRUCTION SPECIFICATIONS INSTITUTE

Copyright © 2007 National Society of Professional Engineers for EJCDC. All rights reserved.

These General Conditions have been prepared for use with the Suggested Forms of Agreement Between Owner and Contractor (EJCDC C-520 or C-525, 2007 Editions). Their provisions are interrelated and a change in one may necessitate a change in the other. Comments concerning their usage are contained in the Narrative Guide to the EJCDC Construction Documents (EJCDC C-001, 2007 Edition). For guidance in the preparation of Supplementary Conditions, see Guide to the Preparation of Supplementary Conditions (EJCDC C-800, 2007 Edition).

Copyright © 2007 National Society of Professional Engineers
1420 King Street, Alexandria, VA 22314-2794
(703) 684-2882
www.nspe.org

American Council of Engineering Companies
1015 15th Street N.W., Washington, DC 20005
(202) 347-7474
www.acec.org

American Society of Civil Engineers
1801 Alexander Bell Drive, Reston, VA 20191-4400
(800) 548-2723
www.asce.org

Associated General Contractors of America
2300 Wilson Boulevard, Suite 400, Arlington, VA 22201-3308
(703) 548-3118
www.agc.org

The copyright for this EJCDC document is owned jointly by the four EJCDC sponsoring organizations and held in trust for their benefit by NSPE.

Copyright © 2007 National Society of Professional Engineers for EJCDC. All rights reserved.

STANDARD GENERAL CONDITIONS OF THE CONSTRUCTION CONTRACT

TABLE OF CONTENTS

Page

Article 1 – Definitions and Terminology 1
1.01 Defined Terms 1
1.02 Terminology 5

Article 2 – Preliminary Matters 6
2.01 Delivery of Bonds and Evidence of Insurance 6
2.02 Copies of Documents 6
2.03 Commencement of Contract Times; Notice to Proceed 7
2.04 Starting the Work 7
2.05 Before Starting Construction 7
2.06 Preconstruction Conference; Designation of Authorized Representatives 7
2.07 Initial Acceptance of Schedules 7

Article 3 – Contract Documents: Intent, Amending, Reuse 8
3.01 Intent 8
3.02 Reference Standards 8
3.03 Reporting and Resolving Discrepancies 9
3.04 Amending and Supplementing Contract Documents 9
3.05 Reuse of Documents 10
3.06 Electronic Data 10

Article 4 – Availability of Lands; Subsurface and Physical Conditions; Hazardous Environmental Conditions; Reference Points 11
4.01 Availability of Lands 11
4.02 Subsurface and Physical Conditions 11
4.03 Differing Subsurface or Physical Conditions 11
4.04 Underground Facilities 12
4.05 Reference Points 13
4.06 Hazardous Environmental Condition at Site 14

Article 5 – Bonds and Insurance 15
5.01 Performance, Payment, and Other Bonds 15
5.02 Licensed Sureties and Insurers 16
5.03 Certificates of Insurance 16
5.04 Contractor's Insurance 16
5.05 Owner's Liability Insurance 19
5.06 Property Insurance 19
5.07 Waiver of Rights 21
5.08 Receipt and Application of Insurance Proceeds 22

Copyright © 2007 National Society of Professional Engineers for EJCDC. All rights reserved.

5.09 Acceptance of Bonds and Insurance; Option to Replace 22
5.10 Partial Utilization, Acknowledgment of Property Insurer 22

Article 6 – Contractor's Responsibilities 23
6.01 Supervision and Superintendence 23
6.02 Labor; Working Hours 23
6.03 Services, Materials, and Equipment 23
6.04 Progress Schedule 24
6.05 Substitutes and "Or-Equals" 24
6.06 Concerning Subcontractors, Suppliers, and Others 27
6.07 Patent Fees and Royalties 28
6.08 Permits 29
6.09 Laws and Regulations 29
6.10 Taxes 29
6.11 Use of Site and Other Areas 30
6.12 Record Documents 31
6.13 Safety and Protection 31
6.14 Safety Representative 32
6.15 Hazard Communication Programs 32
6.16 Emergencies 32
6.17 Shop Drawings and Samples 32
6.18 Continuing the Work 34
6.19 Contractor's General Warranty and Guarantee 34
6.20 Indemnification 35
6.21 Delegation of Professional Design Services 36

Article 7 – Other Work at the Site 36
7.01 Related Work at Site 36
7.02 Coordination 37
7.03 Legal Relationships 37

Article 8 – Owner's Responsibilities 38
8.01 Communications to Contractor 38
8.02 Replacement of Engineer 38
8.03 Furnish Data 38
8.04 Pay When Due 38
8.05 Lands and Easements; Reports and Tests 38
8.06 Insurance 38
8.07 Change Orders 38
8.08 Inspections, Tests, and Approvals 38
8.09 Limitations on Owner's Responsibilities 38
8.10 Undisclosed Hazardous Environmental Condition 39
8.11 Evidence of Financial Arrangements 39
8.12 Compliance with Safety Program 39

Article 9 – Engineer's Status During Construction 39
9.01 Owner's Representative 39

Copyright © 2007 National Society of Professional Engineers for EJCDC. All rights reserved.

9.02 Visits to Site 39
9.03 Project Representative 40
9.04 Authorized Variations in Work 40
9.05 Rejecting Defective Work 40
9.06 Shop Drawings, Change Orders and Payments 40
9.07 Determinations for Unit Price Work 41
9.08 Decisions on Requirements of Contract Documents and Acceptability of Work 41
9.09 Limitations on Engineer's Authority and Responsibilities 41
9.10 Compliance with Safety Program 42

Article 10 – Changes in the Work; Claims 42
10.01 Authorized Changes in the Work 42
10.02 Unauthorized Changes in the Work 42
10.03 Execution of Change Orders 42
10.04 Notification to Surety 43
10.05 Claims 43

Article 11 – Cost of the Work; Allowances; Unit Price Work 44
11.01 Cost of the Work 44
11.02 Allowances 46
11.03 Unit Price Work 47

Article 12 – Change of Contract Price; Change of Contract Times 48
12.01 Change of Contract Price 48
12.02 Change of Contract Times 49
12.03 Delays 49

Article 13 – Tests and Inspections; Correction, Removal or Acceptance of Defective Work 50
13.01 Notice of Defects 50
13.02 Access to Work 50
13.03 Tests and Inspections 50
13.04 Uncovering Work 51
13.05 Owner May Stop the Work 51
13.06 Correction or Removal of Defective Work 52
13.07 Correction Period 52
13.08 Acceptance of Defective Work 53
13.09 Owner May Correct Defective Work 53

Article 14 – Payments to Contractor and Completion 54
14.01 Schedule of Values 54
14.02 Progress Payments 54
14.03 Contractor's Warranty of Title 57
14.04 Substantial Completion 57
14.05 Partial Utilization 58
14.06 Final Inspection 59
14.07 Final Payment 59
14.08 Final Completion Delayed 60

Copyright © 2007 National Society of Professional Engineers for EJCDC. All rights reserved.

14.09 Waiver of Claims 60

Article 15 – Suspension of Work and Termination 61
15.01 Owner May Suspend Work 61
15.02 Owner May Terminate for Cause 61
15.03 Owner May Terminate For Convenience 62
15.04 Contractor May Stop Work or Terminate 62

Article 16 – Dispute Resolution 63
16.01 Methods and Procedures 63

Article 17 – Miscellaneous 63
17.01 Giving Notice 63
17.02 Computation of Times 64
17.03 Cumulative Remedies 64
17.04 Survival of Obligations 64
17.05 Controlling Law 64
17.06 Headings 64

Copyright © 2007 National Society of Professional Engineers for EJCDC. All rights reserved.

ARTICLE 1 – DEFINITIONS AND TERMINOLOGY

1.01 *Defined Terms*

A. Wherever used in the Bidding Requirements or Contract Documents and printed with initial capital letters, the terms listed below will have the meanings indicated which are applicable to both the singular and plural thereof. In addition to terms specifically defined, terms with initial capital letters in the Contract Documents include references to identified articles and paragraphs, and the titles of other documents or forms.

1. *Addenda*—Written or graphic instruments issued prior to the opening of Bids which clarify, correct, or change the Bidding Requirements or the proposed Contract Documents.

2. *Agreement*—The written instrument which is evidence of the agreement between Owner and Contractor covering the Work.

3. *Application for Payment*—The form acceptable to Engineer which is to be used by Contractor during the course of the Work in requesting progress or final payments and which is to be accompanied by such supporting documentation as is required by the Contract Documents. The Application for Payment form to be used on this Project is EJCDC No. C-620. The Agency must approve all Applications for Payment before payment is made.

4. *Asbestos*—Any material that contains more than one percent asbestos and is friable or is releasing asbestos fibers into the air above current action levels established by the United States Occupational Safety and Health Administration.

5. *Bid*—The offer or proposal of a Bidder submitted on the prescribed form setting forth the prices for the Work to be performed.

6. *Bidder*—The individual or entity who submits a Bid directly to Owner.

7. *Bidding Documents*—The Bidding Requirements and the proposed Contract Documents (including all Addenda).

8. *Bidding Requirements*—The advertisement or invitation to bid, Instructions to Bidders, Bid security of acceptable form, if any, and the Bid Form with any supplements.

9. *Change Order*—A document recommended by Engineer which is signed by Contractor and Owner and authorizes an addition, deletion, or revision in the Work or an adjustment in the Contract Price or the Contract Times, issued on or after the Effective Date of the Agreement.

10. *Claim*—A demand or assertion by Owner or Contractor seeking an adjustment of Contract Price or Contract Times, or both, or other relief with respect to the terms of the Contract. A demand for money or services by a third party is not a Claim.

11. *Contract*—The entire and integrated written agreement between the Owner and Contractor concerning the Work. The Contract supersedes prior negotiations, representations, or agreements, whether written or oral.

Copyright © 2007 National Society of Professional Engineers for EJCDC. All rights reserved.

12. *Contract Documents*—Those items so designated in the Agreement. Only printed or hard copies of the items listed in the Agreement are Contract Documents. Approved Shop Drawings, other Contractor submittals, and the reports and drawings of subsurface and physical conditions are not Contract Documents.

13. *Contract Price*—The moneys payable by Owner to Contractor for completion of the Work in accordance with the Contract Documents as stated in the Agreement (subject to the provisions of Paragraph 11.03 in the case of Unit Price Work).

14. *Contract Times*—The number of days or the dates stated in the Agreement to: (i) achieve Milestones, if any; (ii) achieve Substantial Completion; and (iii) complete the Work so that it is ready for final payment as evidenced by Engineer's written recommendation of final payment.

15. *Contractor*—The individual or entity with whom Owner has entered into the Agreement.

16. *Cost of the Work*—See Paragraph 11.01 for definition.

17. *Drawings*—That part of the Contract Documents prepared or approved by Engineer which graphically shows the scope, extent, and character of the Work to be performed by Contractor. Shop Drawings and other Contractor submittals are not Drawings as so defined.

18. *Effective Date of the Agreement*—The date indicated in the Agreement on which it becomes effective, but if no such date is indicated, it means the date on which the Agreement is signed and delivered by the last of the two parties to sign and deliver.

19. *Engineer*—The individual or entity named as such in the Agreement. The Engineer and the Engineer's Consultants on this project are:

    Heneghan and Associates, P.C.
    838 East McCord
    Centralia, IL 62801

20. *Field Order*—A written order issued by Engineer which requires minor changes in the Work but which does not involve a change in the Contract Price or the Contract Times.

21. *General Requirements*—Sections of Division 1 of the Specifications.

22. *Hazardous Environmental Condition*—The presence at the Site of Asbestos, PCBs, Petroleum, Hazardous Waste, or Radioactive Material in such quantities or circumstances that may present a substantial danger to persons or property exposed thereto.

23. *Hazardous Waste*—The term Hazardous Waste shall have the meaning provided in Section 1004 of the Solid Waste Disposal Act (42 USC Section 6903) as amended from time to time.

Copyright © 2007 National Society of Professional Engineers for EJCDC. All rights reserved.

24. *Laws and Regulations; Laws or Regulations*—Any and all applicable laws, rules, regulations, ordinances, codes, and orders of any and all governmental bodies, agencies, authorities, and courts having jurisdiction.

25. *Liens*—Charges, security interests, or encumbrances upon Project funds, real property, or personal property.

26. *Milestone*—A principal event specified in the Contract Documents relating to an intermediate completion date or time prior to Substantial Completion of all the Work.

27. *Notice of Award*—The written notice by Owner to the Successful Bidder stating that upon timely compliance by the Successful Bidder with the conditions precedent listed therein, Owner will sign and deliver the Agreement.

28. *Notice to Proceed*—A written notice given by Owner to Contractor fixing the date on which the Contract Times will commence to run and on which Contractor shall start to perform the Work under the Contract Documents.

29. *Owner*—The individual or entity with whom Contractor has entered into the Agreement and for whom the Work is to be performed.

30. *PCBs*—Polychlorinated biphenyls.

31. *Petroleum*—Petroleum, including crude oil or any fraction thereof which is liquid at standard conditions of temperature and pressure (60 degrees Fahrenheit and 14.7 pounds per square inch absolute), such as oil, petroleum, fuel oil, oil sludge, oil refuse, gasoline, kerosene, and oil mixed with other non-Hazardous Waste and crude oils.

32. *Progress Schedule*—A schedule, prepared and maintained by Contractor, describing the sequence and duration of the activities comprising the Contractor's plan to accomplish the Work within the Contract Times.

33. *Project*—The total construction of which the Work to be performed under the Contract Documents may be the whole, or a part.

34. *Project Manual*—The bound documentary information prepared for bidding and constructing the Work. A listing of the contents of the Project Manual, which may be bound in one or more volumes, is contained in the table(s) of contents.

35. *Radioactive Material*—Source, special nuclear, or byproduct material as defined by the Atomic Energy Act of 1954 (42 USC Section 2011 et seq.) as amended from time to time.

36. *Resident Project Representative*—The authorized representative of Engineer who may be assigned to the Site or any part thereof.

37. *Samples*—Physical examples of materials, equipment, or workmanship that are representative of some portion of the Work and which establish the standards by which such portion of the Work will be judged.

Copyright © 2007 National Society of Professional Engineers for EJCDC. All rights reserved.

38. *Schedule of Submittals*—A schedule, prepared and maintained by Contractor, of required submittals and the time requirements to support scheduled performance of related construction activities.

39. *Schedule of Values*—A schedule, prepared and maintained by Contractor, allocating portions of the Contract Price to various portions of the Work and used as the basis for reviewing Contractor's Applications for Payment.

40. *Shop Drawings*—All drawings, diagrams, illustrations, schedules, and other data or information which are specifically prepared or assembled by or for Contractor and submitted by Contractor to illustrate some portion of the Work.

41. *Site*—Lands or areas indicated in the Contract Documents as being furnished by Owner upon which the Work is to be performed, including rights-of-way and easements for access thereto, and such other lands furnished by Owner which are designated for the use of Contractor.

42. *Specifications*—That part of the Contract Documents consisting of written requirements for materials, equipment, systems, standards and workmanship as applied to the Work, and certain administrative requirements and procedural matters applicable thereto.

43. *Subcontractor*—An individual or entity having a direct contract with Contractor or with any other Subcontractor for the performance of a part of the Work at the Site.

44. *Substantial Completion*—The time at which the Work (or a specified part thereof) has progressed to the point where, in the opinion of Engineer, the Work (or a specified part thereof) is sufficiently complete, in accordance with the Contract Documents, so that the Work (or a specified part thereof) can be utilized for the purposes for which it is intended. The terms "substantially complete" and "substantially completed" as applied to all or part of the Work refer to Substantial Completion thereof.

45. *Successful Bidder*—The Bidder submitting a responsive Bid to whom Owner makes an award.

46. *Supplementary Conditions*—That part of the Contract Documents which amends or supplements these General Conditions.

47. *Supplier*—A manufacturer, fabricator, supplier, distributor, materialman, or vendor having a direct contract with Contractor or with any Subcontractor to furnish materials or equipment to be incorporated in the Work by Contractor or Subcontractor.

48. *Underground Facilities*—All underground pipelines, conduits, ducts, cables, wires, manholes, vaults, tanks, tunnels, or other such facilities or attachments, and any encasements containing such facilities, including those that convey electricity, gases, steam, liquid petroleum products, telephone or other communications, cable television, water, wastewater, storm water, other liquids or chemicals, or traffic or other control systems.

49. *Unit Price Work*—Work to be paid for on the basis of unit prices.

Copyright © 2007 National Society of Professional Engineers for EJCDC. All rights reserved.

50. *Work*—The entire construction or the various separately identifiable parts thereof required to be provided under the Contract Documents. Work includes and is the result of performing or providing all labor, services, and documentation necessary to produce such construction, and furnishing, installing, and incorporating all materials and equipment into such construction, all as required by the Contract Documents.

51. *Work Change Directive*—A written statement to Contractor issued on or after the Effective Date of the Agreement and signed by Owner and recommended by Engineer ordering an addition, deletion, or revision in the Work, or responding to differing or unforeseen subsurface or physical conditions under which the Work is to be performed or to emergencies. A Work Change Directive will not change the Contract Price or the Contract Times but is evidence that the parties expect that the change ordered or documented by a Work Change Directive will be incorporated in a subsequently issued Change Order following negotiations by the parties as to its effect, if any, on the Contract Price or Contract Times.

1.02 *Terminology*

A. The words and terms discussed in Paragraph 1.02.B through F are not defined but, when used in the Bidding Requirements or Contract Documents, have the indicated meaning.

B. *Intent of Certain Terms or Adjectives:*

1. The Contract Documents include the terms "as allowed," "as approved," "as ordered," "as directed" or terms of like effect or import to authorize an exercise of professional judgment by Engineer. In addition, the adjectives "reasonable," "suitable," "acceptable," "proper," "satisfactory," or adjectives of like effect or import are used to describe an action or determination of Engineer as to the Work. It is intended that such exercise of professional judgment, action, or determination will be solely to evaluate, in general, the Work for compliance with the information in the Contract Documents and with the design concept of the Project as a functioning whole as shown or indicated in the Contract Documents (unless there is a specific statement indicating otherwise). The use of any such term or adjective is not intended to and shall not be effective to assign to Engineer any duty or authority to supervise or direct the performance of the Work, or any duty or authority to undertake responsibility contrary to the provisions of Paragraph 9.09 or any other provision of the Contract Documents.

C. *Day:*

1. The word "day" means a calendar day of 24 hours measured from midnight to the next midnight.

D. *Defective:*

1. The word "defective," when modifying the word "Work," refers to Work that is unsatisfactory, faulty, or deficient in that it:

a. does not conform to the Contract Documents; or

Copyright © 2007 National Society of Professional Engineers for EJCDC. All rights reserved.

b. does not meet the requirements of any applicable inspection, reference standard, test, or approval referred to in the Contract Documents; or

c. has been damaged prior to Engineer's recommendation of final payment (unless responsibility for the protection thereof has been assumed by Owner at Substantial Completion in accordance with Paragraph 14.04 or 14.05).

E. *Furnish, Install, Perform, Provide:*

1. The word "furnish," when used in connection with services, materials, or equipment, shall mean to supply and deliver said services, materials, or equipment to the Site (or some other specified location) ready for use or installation and in usable or operable condition.

2. The word "install," when used in connection with services, materials, or equipment, shall mean to put into use or place in final position said services, materials, or equipment complete and ready for intended use.

3. The words "perform" or "provide," when used in connection with services, materials, or equipment, shall mean to furnish and install said services, materials, or equipment complete and ready for intended use.

4. When "furnish," "install," "perform," or "provide" is not used in connection with services, materials, or equipment in a context clearly requiring an obligation of Contractor, "provide" is implied.

F. Unless stated otherwise in the Contract Documents, words or phrases that have a well-known technical or construction industry or trade meaning are used in the Contract Documents in accordance with such recognized meaning.

ARTICLE 2 – PRELIMINARY MATTERS

2.01 *Delivery of Bonds and Evidence of Insurance*

A. When Contractor delivers the executed counterparts of the Agreement to Owner, Contractor shall also deliver to Owner such bonds as Contractor may be required to furnish.

B. *Evidence of Insurance:* Before any Work at the Site is started, Contractor and Owner shall each deliver to the other, with copies to each additional insured identified in the Supplementary Conditions, certificates of insurance (and other evidence of insurance which either of them or any additional insured may reasonably request) which Contractor and Owner respectively are required to purchase and maintain in accordance with Article 5.

2.02 *Copies of Documents*

A. Owner shall furnish to Contractor up to ten printed or hard copies of the Drawings and Project Manual. Additional copies will be furnished upon request at the cost of reproduction.

Copyright © 2007 National Society of Professional Engineers for EJCDC. All rights reserved.

2.03 *Commencement of Contract Times; Notice to Proceed*

A. The Contract Time will commence to run on the day indicated in the Notice to Proceed. A Notice to Proceed may be given at any time within 30 days after the Effective Date of the Agreement.

2.04 *Starting the Work*

A. Contractor shall start to perform the Work on the date when the Contract Times commence to run. No Work shall be done at the Site prior to the date on which the Contract Times commence to run.

2.05 *Before Starting Construction*

A. *Preliminary Schedules:* Within 10 days after the Effective Date of the Agreement (unless otherwise specified in the General Requirements), Contractor shall submit to Engineer for timely review:

1. a preliminary Progress Schedule indicating the times (numbers of days or dates) for starting and completing the various stages of the Work, including any Milestones specified in the Contract Documents;

2. a preliminary Schedule of Submittals; and

3. a preliminary Schedule of Values for all of the Work which includes quantities and prices of items which when added together equal the Contract Price and subdivides the Work into component parts in sufficient detail to serve as the basis for progress payments during performance of the Work. Such prices will include an appropriate amount of overhead and profit applicable to each item of Work.

2.06 *Preconstruction Conference; Designation of Authorized Representatives*

A. Before any Work at the Site is started, a conference attended by Owner, Contractor, Engineer, and others as appropriate will be held to establish a working understanding among the parties as to the Work and to discuss the schedules referred to in Paragraph 2.05.A, procedures for handling Shop Drawings and other submittals, processing Applications for Payment, and maintaining required records.

B. At this conference Owner and Contractor each shall designate, in writing, a specific individual to act as its authorized representative with respect to the services and responsibilities under the Contract. Such individuals shall have the authority to transmit instructions, receive information, render decisions relative to the Contract, and otherwise act on behalf of each respective party.

2.07 *Initial Acceptance of Schedules*

A. At least 10 days before submission of the first Application for Payment a conference attended by Contractor, Engineer, and others as appropriate will be held to review for acceptability to Engineer as provided below the schedules submitted in accordance with Paragraph 2.05.A.

Copyright © 2007 National Society of Professional Engineers for EJCDC. All rights reserved.

Contractor shall have an additional 10 days to make corrections and adjustments and to complete and resubmit the schedules. No progress payment shall be made to Contractor until acceptable schedules are submitted to Engineer.

1. The Progress Schedule will be acceptable to Engineer if it provides an orderly progression of the Work to completion within the Contract Times. Such acceptance will not impose on Engineer responsibility for the Progress Schedule, for sequencing, scheduling, or progress of the Work, nor interfere with or relieve Contractor from Contractor's full responsibility therefor.

2. Contractor's Schedule of Submittals will be acceptable to Engineer if it provides a workable arrangement for reviewing and processing the required submittals.

3. Contractor's Schedule of Values will be acceptable to Engineer as to form and substance if it provides a reasonable allocation of the Contract Price to component parts of the Work.

ARTICLE 3 – CONTRACT DOCUMENTS: INTENT, AMENDING, REUSE

3.01 *Intent*

A. The Contract Documents are complementary; what is required by one is as binding as if required by all.

B. It is the intent of the Contract Documents to describe a functionally complete project (or part thereof) to be constructed in accordance with the Contract Documents. Any labor, documentation, services, materials, or equipment that reasonably may be inferred from the Contract Documents or from prevailing custom or trade usage as being required to produce the indicated result will be provided whether or not specifically called for, at no additional cost to Owner.

C. Clarifications and interpretations of the Contract Documents shall be issued by Engineer as provided in Article 9.

3.02 *Reference Standards*

A. Standards, Specifications, Codes, Laws, and Regulations

1. Reference to standards, specifications, manuals, or codes of any technical society, organization, or association, or to Laws or Regulations, whether such reference be specific or by implication, shall mean the standard, specification, manual, code, or Laws or Regulations in effect at the time of opening of Bids (or on the Effective Date of the Agreement if there were no Bids), except as may be otherwise specifically stated in the Contract Documents.

2. No provision of any such standard, specification, manual, or code, or any instruction of a Supplier, shall be effective to change the duties or responsibilities of Owner, Contractor, or Engineer, or any of their subcontractors, consultants, agents, or employees, from those set forth in the Contract Documents. No such provision or instruction shall be effective to assign to Owner, Engineer, or any of their officers, directors, members, partners, employees, agents,

Copyright © 2007 National Society of Professional Engineers for EJCDC. All rights reserved.

consultants, or subcontractors, any duty or authority to supervise or direct the performance of the Work or any duty or authority to undertake responsibility inconsistent with the provisions of the Contract Documents.

3.03 *Reporting and Resolving Discrepancies*

A. *Reporting Discrepancies:*

1. *Contractor's Review of Contract Documents Before Starting Work*: Before undertaking each part of the Work, Contractor shall carefully study and compare the Contract Documents and check and verify pertinent figures therein and all applicable field measurements. Contractor shall promptly report in writing to Engineer any conflict, error, ambiguity, or discrepancy which Contractor discovers, or has actual knowledge of, and shall obtain a written interpretation or clarification from Engineer before proceeding with any Work affected thereby.

2. *Contractor's Review of Contract Documents During Performance of Work*: If, during the performance of the Work, Contractor discovers any conflict, error, ambiguity, or discrepancy within the Contract Documents, or between the Contract Documents and (a) any applicable Law or Regulation , (b) any standard, specification, manual, or code, or (c) any instruction of any Supplier, then Contractor shall promptly report it to Engineer in writing. Contractor shall not proceed with the Work affected thereby (except in an emergency as required by Paragraph 6.16.A) until an amendment or supplement to the Contract Documents has been issued by one of the methods indicated in Paragraph 3.04.

3. Contractor shall not be liable to Owner or Engineer for failure to report any conflict, error, ambiguity, or discrepancy in the Contract Documents unless Contractor had actual knowledge thereof.

B. *Resolving Discrepancies:*

1. Except as may be otherwise specifically stated in the Contract Documents, the provisions of the Contract Documents shall take precedence in resolving any conflict, error, ambiguity, or discrepancy between the provisions of the Contract Documents and:

a. the provisions of any standard, specification, manual, or code, or the instruction of any Supplier (whether or not specifically incorporated by reference in the Contract Documents); or

b. the provisions of any Laws or Regulations applicable to the performance of the Work (unless such an interpretation of the provisions of the Contract Documents would result in violation of such Law or Regulation).

3.04 *Amending and Supplementing Contract Documents*

A. The Contract Documents may be amended to provide for additions, deletions, and revisions in the Work or to modify the terms and conditions thereof by either a Change Order or a Work Change Directive.

Copyright © 2007 National Society of Professional Engineers for EJCDC. All rights reserved.

B. The requirements of the Contract Documents may be supplemented, and minor variations and deviations in the Work may be authorized, by one or more of the following ways:

1. A Field Order;

2. Engineer's approval of a Shop Drawing or Sample (subject to the provisions of Paragraph 6.17.D.3); or

3. Engineer's written interpretation or clarification.

3.05 *Reuse of Documents*

A. Contractor and any Subcontractor or Supplier shall not:

1. have or acquire any title to or ownership rights in any of the Drawings, Specifications, or other documents (or copies of any thereof) prepared by or bearing the seal of Engineer or its consultants, including electronic media editions; or

2. reuse any such Drawings, Specifications, other documents, or copies thereof on extensions of the Project or any other project without written consent of Owner and Engineer and specific written verification or adaptation by Engineer.

B. The prohibitions of this Paragraph 3.05 will survive final payment, or termination of the Contract. Nothing herein shall preclude Contractor from retaining copies of the Contract Documents for record purposes.

3.06 *Electronic Data*

A. Unless otherwise stated in the Supplementary Conditions, the data furnished by Owner or Engineer to Contractor, or by Contractor to Owner or Engineer, that may be relied upon are limited to the printed copies (also known as hard copies). Files in electronic media format of text, data, graphics, or other types are furnished only for the convenience of the receiving party. Any conclusion or information obtained or derived from such electronic files will be at the user's sole risk. If there is a discrepancy between the electronic files and the hard copies, the hard copies govern.

B. Because data stored in electronic media format can deteriorate or be modified inadvertently or otherwise without authorization of the data's creator, the party receiving electronic files agrees that it will perform acceptance tests or procedures within 60 days, after which the receiving party shall be deemed to have accepted the data thus transferred. Any errors detected within the 60-day acceptance period will be corrected by the transferring party.

C. When transferring documents in electronic media format, the transferring party makes no representations as to long term compatibility, usability, or readability of documents resulting from the use of software application packages, operating systems, or computer hardware differing from those used by the data's creator.

Copyright © 2007 National Society of Professional Engineers for EJCDC. All rights reserved.

ARTICLE 4 – AVAILABILITY OF LANDS; SUBSURFACE AND PHYSICAL CONDITIONS; HAZARDOUS ENVIRONMENTAL CONDITIONS; REFERENCE POINTS

4.01 *Availability of Lands*

A. Owner shall furnish the Site. Owner shall notify Contractor of any encumbrances or restrictions not of general application but specifically related to use of the Site with which Contractor must comply in performing the Work. Owner will obtain in a timely manner and pay for easements for permanent structures or permanent changes in existing facilities. If Contractor and Owner are unable to agree on entitlement to or on the amount or extent, if any, of any adjustment in the Contract Price or Contract Times, or both, as a result of any delay in Owner's furnishing the Site or a part thereof, Contractor may make a Claim therefor as provided in Paragraph 10.05.

B. Upon reasonable written request, Owner shall furnish Contractor with a current statement of record legal title and legal description of the lands upon which the Work is to be performed and Owner's interest therein as necessary for giving notice of or filing a mechanic's or construction lien against such lands in accordance with applicable Laws and Regulations.

C. Contractor shall provide for all additional lands and access thereto that may be required for temporary construction facilities or storage of materials and equipment.

4.02 *Subsurface and Physical Conditions*

1.

A. A subsurface investigation has not been performed at the proposed Site.

4.03 *Differing Subsurface or Physical Conditions*

A. *Notice:* If Contractor believes that any subsurface or physical condition that is uncovered or revealed either:

1. is of such a nature as to establish that any "technical data" on which Contractor is entitled to rely as provided in Paragraph 4.02 is materially inaccurate; or

2. is of such a nature as to require a change in the Contract Documents; or

3. differs materially from that shown or indicated in the Contract Documents; or

4. is of an unusual nature, and differs materially from conditions ordinarily encountered and generally recognized as inherent in work of the character provided for in the Contract Documents;

then Contractor shall, promptly after becoming aware thereof and before further disturbing the subsurface or physical conditions or performing any Work in connection therewith (except in an emergency as required by Paragraph 6.16.A), notify Owner and Engineer in writing about such condition. Contractor shall not further disturb such condition or perform any Work in connection therewith (except as aforesaid) until receipt of written order to do so.

Copyright © 2007 National Society of Professional Engineers for EJCDC. All rights reserved.

B. *Engineer's Review*: After receipt of written notice as required by Paragraph 4.03.A, Engineer will promptly review the pertinent condition, determine the necessity of Owner's obtaining additional exploration or tests with respect thereto, and advise Owner in writing (with a copy to Contractor) of Engineer's findings and conclusions.

C. *Possible Price and Times Adjustments:*

1. The Contract Price or the Contract Times, or both, will be equitably adjusted to the extent that the existence of such differing subsurface or physical condition causes an increase or decrease in Contractor's cost of, or time required for, performance of the Work; subject, however, to the following:

   a. such condition must meet any one or more of the categories described in Paragraph 4.03.A; and

   b. with respect to Work that is paid for on a unit price basis, any adjustment in Contract Price will be subject to the provisions of Paragraphs 9.07 and 11.03.

2. Contractor shall not be entitled to any adjustment in the Contract Price or Contract Times if:

   a. Contractor knew of the existence of such conditions at the time Contractor made a final commitment to Owner with respect to Contract Price and Contract Times by the submission of a Bid or becoming bound under a negotiated contract; or

   b. the existence of such condition could reasonably have been discovered or revealed as a result of any examination, investigation, exploration, test, or study of the Site and contiguous areas required by the Bidding Requirements or Contract Documents to be conducted by or for Contractor prior to Contractor's making such final commitment; or

   c. Contractor failed to give the written notice as required by Paragraph 4.03.A.

3. If Owner and Contractor are unable to agree on entitlement to or on the amount or extent, if any, of any adjustment in the Contract Price or Contract Times, or both, a Claim may be made therefor as provided in Paragraph 10.05. However, neither Owner or Engineer, or any of their officers, directors, members, partners, employees, agents, consultants, or subcontractors shall be liable to Contractor for any claims, costs, losses, or damages (including but not limited to all fees and charges of engineers, architects, attorneys, and other professionals and all court or arbitration or other dispute resolution costs) sustained by Contractor on or in connection with any other project or anticipated project.

4.04 *Underground Facilities*

A. *Shown or Indicated:* The information and data shown or indicated in the Contract Documents with respect to existing Underground Facilities at or contiguous to the Site is based on information and data furnished to Owner or Engineer by the owners of such Underground Facilities, including Owner, or by others. Unless it is otherwise expressly provided in the Supplementary Conditions:

Copyright © 2007 National Society of Professional Engineers for EJCDC. All rights reserved.

1. Owner and Engineer shall not be responsible for the accuracy or completeness of any such information or data provided by others; and

2. the cost of all of the following will be included in the Contract Price, and Contractor shall have full responsibility for:

   a. reviewing and checking all such information and data;

   b. locating all Underground Facilities shown or indicated in the Contract Documents;

   c. coordination of the Work with the owners of such Underground Facilities, including Owner, during construction; and

   d. the safety and protection of all such Underground Facilities and repairing any damage thereto resulting from the Work.

B. *Not Shown or Indicated:*

1. If an Underground Facility is uncovered or revealed at or contiguous to the Site which was not shown or indicated, or not shown or indicated with reasonable accuracy in the Contract Documents, Contractor shall, promptly after becoming aware thereof and before further disturbing conditions affected thereby or performing any Work in connection therewith (except in an emergency as required by Paragraph 6.16.A), identify the owner of such Underground Facility and give written notice to that owner and to Owner and Engineer. Engineer will promptly review the Underground Facility and determine the extent, if any, to which a change is required in the Contract Documents to reflect and document the consequences of the existence or location of the Underground Facility. During such time, Contractor shall be responsible for the safety and protection of such Underground Facility.

2. If Engineer concludes that a change in the Contract Documents is required, a Work Change Directive or a Change Order will be issued to reflect and document such consequences. An equitable adjustment shall be made in the Contract Price or Contract Times, or both, to the extent that they are attributable to the existence or location of any Underground Facility that was not shown or indicated or not shown or indicated with reasonable accuracy in the Contract Documents and that Contractor did not know of and could not reasonably have been expected to be aware of or to have anticipated. If Owner and Contractor are unable to agree on entitlement to or on the amount or extent, if any, of any such adjustment in Contract Price or Contract Times, Owner or Contractor may make a Claim therefor as provided in Paragraph 10.05.

4.05 *Reference Points*

A. Owner shall provide engineering surveys to establish reference points for construction which in Engineer's judgment are necessary to enable Contractor to proceed with the Work. Contractor shall be responsible for laying out the Work, shall protect and preserve the established reference points and property monuments, and shall make no changes or relocations without the prior written approval of Owner. Contractor shall report to Engineer whenever any reference point or property monument is lost or destroyed or requires relocation because of necessary changes in

Copyright © 2007 National Society of Professional Engineers for EJCDC. All rights reserved.

grades or locations, and shall be responsible for the accurate replacement or relocation of such reference points or property monuments by professionally qualified personnel.

4.06 *Hazardous Environmental Condition at Site*

A. No reports or drawings of Hazardous Environmental Conditions at or contiguous to the Site are known to the Owner or Engineer.

B. Not Used.

C. Contractor shall not be responsible for any Hazardous Environmental Condition uncovered or revealed at the Site which was not shown or indicated in Drawings or Specifications or identified in the Contract Documents to be within the scope of the Work. Contractor shall be responsible for a Hazardous Environmental Condition created with any materials brought to the Site by Contractor, Subcontractors, Suppliers, or anyone else for whom Contractor is responsible.

D. If Contractor encounters a Hazardous Environmental Condition or if Contractor or anyone for whom Contractor is responsible creates a Hazardous Environmental Condition, Contractor shall immediately: (i) secure or otherwise isolate such condition; (ii) stop all Work in connection with such condition and in any area affected thereby (except in an emergency as required by Paragraph 6.16.A); and (iii) notify Owner and Engineer (and promptly thereafter confirm such notice in writing). Owner shall promptly consult with Engineer concerning the necessity for Owner to retain a qualified expert to evaluate such condition or take corrective action, if any. Promptly after consulting with Engineer, Owner shall take such actions as are necessary to permit Owner to timely obtain required permits and provide Contractor the written notice required by Paragraph 4.06.E.

E. Contractor shall not be required to resume Work in connection with such condition or in any affected area until after Owner has obtained any required permits related thereto and delivered written notice to Contractor: (i) specifying that such condition and any affected area is or has been rendered safe for the resumption of Work; or (ii) specifying any special conditions under which such Work may be resumed safely. If Owner and Contractor cannot agree as to entitlement to or on the amount or extent, if any, of any adjustment in Contract Price or Contract Times, or both, as a result of such Work stoppage or such special conditions under which Work is agreed to be resumed by Contractor, either party may make a Claim therefor as provided in Paragraph 10.05.

F. If after receipt of such written notice Contractor does not agree to resume such Work based on a reasonable belief it is unsafe, or does not agree to resume such Work under such special conditions, then Owner may order the portion of the Work that is in the area affected by such condition to be deleted from the Work. If Owner and Contractor cannot agree as to entitlement to or on the amount or extent, if any, of an adjustment in Contract Price or Contract Times as a result of deleting such portion of the Work, then either party may make a Claim therefor as provided in Paragraph 10.05. Owner may have such deleted portion of the Work performed by Owner's own forces or others in accordance with Article 7.

G. To the fullest extent permitted by Laws and Regulations, Owner shall indemnify and hold harmless Contractor, Subcontractors, and Engineer, and the officers, directors, members,

Copyright © 2007 National Society of Professional Engineers for EJCDC. All rights reserved.

partners, employees, agents, consultants, and subcontractors of each and any of them from and against all claims, costs, losses, and damages (including but not limited to all fees and charges of engineers, architects, attorneys, and other professionals and all court or arbitration or other dispute resolution costs) arising out of or relating to a Hazardous Environmental Condition, provided that such Hazardous Environmental Condition: (i) was not shown or indicated in the Drawings or Specifications or identified in the Contract Documents to be included within the scope of the Work, and (ii) was not created by Contractor or by anyone for whom Contractor is responsible. Nothing in this Paragraph 4.06.G shall obligate Owner to indemnify any individual or entity from and against the consequences of that individual's or entity's own negligence.

H. To the fullest extent permitted by Laws and Regulations, Contractor shall indemnify and hold harmless Owner and Engineer, and the officers, directors, members, partners, employees, agents, consultants, and subcontractors of each and any of them from and against all claims, costs, losses, and damages (including but not limited to all fees and charges of engineers, architects, attorneys, and other professionals and all court or arbitration or other dispute resolution costs) arising out of or relating to a Hazardous Environmental Condition created by Contractor or by anyone for whom Contractor is responsible. Nothing in this Paragraph 4.06.H shall obligate Contractor to indemnify any individual or entity from and against the consequences of that individual's or entity's own negligence.

I. The provisions of Paragraphs 4.02, 4.03, and 4.04 do not apply to a Hazardous Environmental Condition uncovered or revealed at the Site.

ARTICLE 5 – BONDS AND INSURANCE

5.01 *Performance, Payment, and Other Bonds*

A. Contractor shall furnish performance and payment bonds, each in an amount at least equal to the Contract Price as security for the faithful performance and payment of all of Contractor's obligations under the Contract Documents. These bonds shall remain in effect until one year after the date when final payment becomes due or until completion of the correction period specified in Paragraph 13.07, whichever is later, except as provided otherwise by Laws or Regulations or by the Contract Documents. Contractor shall also furnish such other bonds as are required by the Contract Documents.

B. All bonds shall be in the form prescribed by the Contract Documents except as provided otherwise by Laws or Regulations, and shall be executed by such sureties as are named in the list of "Companies Holding Certificates of Authority as Acceptable Sureties on Federal Bonds and as Acceptable Reinsuring Companies" as published in Circular 570 (amended) by the Financial Management Service, Surety Bond Branch, U.S. Department of the Treasury. All bonds signed by an agent or attorney-in-fact must be accompanied by a certified copy of that individual's authority to bind the surety. The evidence of authority shall show that it is effective on the date the agent or attorney-in-fact signed each bond.

C. If the surety on any bond furnished by Contractor is declared bankrupt or becomes insolvent or its right to do business is terminated in any state where any part of the Project is located or it ceases to meet the requirements of Paragraph 5.01.B, Contractor shall promptly notify Owner and Engineer and shall, within 20 days after the event giving rise to such notification, provide another

Copyright © 2007 National Society of Professional Engineers for EJCDC. All rights reserved.

bond and surety, both of which shall comply with the requirements of Paragraphs 5.01.B and 5.02.

5.02 *Licensed Sureties and Insurers*

A. All bonds and insurance required by the Contract Documents to be purchased and maintained by Owner or Contractor shall be obtained from surety or insurance companies that are duly licensed or authorized in the jurisdiction in which the Project is located to issue bonds or insurance policies for the limits and coverages so required. Such surety and insurance companies shall also meet such additional requirements and qualifications as may be provided in the Supplementary Conditions.

5.03 *Certificates of Insurance*

A. Contractor shall deliver to Owner, with copies to each additional insured and loss payee identified in the Supplementary Conditions, certificates of insurance (and other evidence of insurance requested by Owner or any other additional insured) which Contractor is required to purchase and maintain.

B. Owner shall deliver to Contractor, with copies to each additional insured and loss payee identified in the Supplementary Conditions, certificates of insurance (and other evidence of insurance requested by Contractor or any other additional insured) which Owner is required to purchase and maintain.

C. Failure of Owner to demand such certificates or other evidence of Contractor's full compliance with these insurance requirements or failure of Owner to identify a deficiency in compliance from the evidence provided shall not be construed as a waiver of Contractor's obligation to maintain such insurance.

D. Owner does not represent that insurance coverage and limits established in this Contract necessarily will be adequate to protect Contractor.

E. The insurance and insurance limits required herein shall not be deemed as a limitation on Contractor's liability under the indemnities granted to Owner in the Contract Documents.

5.04 *Contractor's Insurance*

A. Contractor shall purchase and maintain such insurance as is appropriate for the Work being performed and as will provide protection from claims set forth below which may arise out of or result from Contractor's performance of the Work and Contractor's other obligations under the Contract Documents, whether it is to be performed by Contractor, any Subcontractor or Supplier, or by anyone directly or indirectly employed by any of them to perform any of the Work, or by anyone for whose acts any of them may be liable:

1. claims under workers' compensation, disability benefits, and other similar employee benefit acts;

Copyright © 2007 National Society of Professional Engineers for EJCDC. All rights reserved.

2. claims for damages because of bodily injury, occupational sickness or disease, or death of Contractor's employees;

3. claims for damages because of bodily injury, sickness or disease, or death of any person other than Contractor's employees;

4. claims for damages insured by reasonably available personal injury liability coverage which are sustained:

   a. by any person as a result of an offense directly or indirectly related to the employment of such person by Contractor, or

   b. by any other person for any other reason;

5. claims for damages, other than to the Work itself, because of injury to or destruction of tangible property wherever located, including loss of use resulting therefrom; and

6. claims for damages because of bodily injury or death of any person or property damage arising out of the ownership, maintenance or use of any motor vehicle.

B. The policies of insurance required by this Paragraph 5.04 shall:

1. with respect to insurance required by Paragraphs 5.04.A.3 through 5.04.A.6 inclusive, be written on an occurrence basis, include as additional insureds (subject to any customary exclusion regarding professional liability) Owner and Engineer, and any other individuals or entities identified in the Supplementary Conditions, all of whom shall be listed as additional insureds, and include coverage for the respective officers, directors, members, partners, employees, agents, consultants, and subcontractors of each and any of all such additional insureds, and the insurance afforded to these additional insureds shall provide primary coverage for all claims covered thereby;

2. include at least the specific coverages and be written for not less than the limits of liability provided in the Supplementary Conditions or required by Laws or Regulations, whichever is greater;

3. include contractual liability insurance covering Contractor's indemnity obligations under Paragraphs 6.11 and 6.20;

4. contain a provision or endorsement that the coverage afforded will not be canceled, materially changed or renewal refused until at least 30 days prior written notice has been given to Owner and Contractor and to each other additional insured identified in the Supplementary Conditions to whom a certificate of insurance has been issued (and the certificates of insurance furnished by the Contractor pursuant to Paragraph 5.03 will so provide);

5. remain in effect at least until final payment and at all times thereafter when Contractor may be correcting, removing, or replacing defective Work in accordance with Paragraph 13.07; and

Copyright © 2007 National Society of Professional Engineers for EJCDC. All rights reserved.

6. include completed operations coverage:

   a. Such insurance shall remain in effect for two years after final payment.

   b. Contractor shall furnish Owner and each other additional insured identified in the Supplementary Conditions, to whom a certificate of insurance has been issued, evidence satisfactory to Owner and any such additional insured of continuation of such insurance at final payment and one year thereafter.

C. The limits of liability for insurance required by Paragraph 5.04 of the General Conditions shall provide coverage for not less than the following amounts or greater where required by Laws and Regulations:

1. Workers' Compensation, and related coverages under Paragraphs 5.04.A.1 and A.2 of the General Conditions:

a. State:	Statutory
b. Applicable Federal (e.g., Longshoremen's)	Statutory
c. Employer's Liability	*{$ 500,000}*

2. Contractor's General Liability under Paragraphs 5.04.A.3 through A.6 of the General Conditions which shall include completed operations and product liability coverages and eliminate the exclusion with respect to property under the care, custody, and control of the Contractor:

a. General Aggregate	*{$ 2,000,000}*
b. Products - Completed Operations Aggregate	*{$ 1,000,000}*
c. Personal and Advertising Injury	{$ 1,000,000}
d. Each Occurrence	
(Bodily Injury and Property Damage)	*{$ 1,000,000}*

   e. Property Damage liability insurance will provide Explosion, Collapse, and Underground coverages where applicable.

   f. Excess or Umbrella Liability

1) General Aggregate	*{$ 5,000,000}*
2) Each Occurrence	*{$ 5,000,000}*

3. Automobile Liability under Paragraph 5.04.A.6 of the General Conditions:

Copyright © 2007 National Society of Professional Engineers for EJCDC. All rights reserved.

a. Bodily Injury:

Each Person	{$ 1,000,000}
Each Accident	{$ 1,000,000}

b. Property Damage:

Each Accident	*{$ 1,000,000}*

c. Combined Single Limit of *{$ 1,000,000}*

4. The Contractual Liability coverage required by paragraph 5.04.B.4 of the General Conditions shall provide coverage for not less than the following amounts:

a. Bodily Injury:

Each Person	{$ 2,000,000}
Each Accident	{$ 2,000,000}

b. Property Damage:

Each Accident	*{$ 2,000,000}*
Annual Aggregate	*{$ 2,000,000}*

5. Certificates of Insurance shall name as the insured the CONTRACTOR, the ENGINEER, and the OWNER. In addition, the Certificate of Insurance shall show the OWNER and the ENGINEER endorsed as an "ADDITIONAL NAMED INSUREDS" on the policy. The CONTRACTOR shall supply the OWNER a copy of the actual Insurance Policy(s), Certificate of Insurances(s), and a copy of the endorsements(s).

5.05 *Owner's Liability Insurance*

A. In addition to the insurance required to be provided by Contractor under Paragraph 5.04, Owner, at Owner's option, may purchase and maintain at Owner's expense Owner's own liability insurance as will protect Owner against claims which may arise from operations under the Contract Documents.

5.06 *Property Insurance*

A. Unless otherwise provided in the Supplementary Conditions, Contractor shall purchase and maintain property insurance upon the Work at the Site in the amount of the full replacement cost thereof (subject to such deductible amounts as may be provided in the Supplementary Conditions or required by Laws and Regulations). This insurance shall:

1. include the interests of Owner, Contractor, Subcontractors, and Engineer, and any other individuals or entities identified in the Supplementary Conditions, and the officers, directors,

Copyright © 2007 National Society of Professional Engineers for EJCDC. All rights reserved.

members, partners, employees, agents, consultants, and subcontractors of each and any of them, each of whom is deemed to have an insurable interest and shall be listed as a loss payee;

2. be written on a Builder's Risk "all-risk" policy form that shall at least include insurance for physical loss or damage to the Work, temporary buildings, falsework, and materials and equipment in transit, and shall insure against at least the following perils or causes of loss: fire, lightning, extended coverage, theft, vandalism and malicious mischief, earthquake, collapse, debris removal, demolition occasioned by enforcement of Laws and Regulations, water damage (other than that caused by flood), and such other perils or causes of loss as may be specifically required by the Supplementary Conditions.

3. include expenses incurred in the repair or replacement of any insured property (including but not limited to fees and charges of engineers and architects);

4. cover materials and equipment stored at the Site or at another location that was agreed to in writing by Owner prior to being incorporated in the Work, provided that such materials and equipment have been included in an Application for Payment recommended by Engineer;

5. allow for partial utilization of the Work by Owner;

6. include testing and startup; and

7. be maintained in effect until final payment is made unless otherwise agreed to in writing by Owner, Contractor, and Engineer with 30 days written notice to each other loss payee to whom a certificate of insurance has been issued.

B. Contractor shall purchase and maintain such equipment breakdown insurance or additional property insurance as may be required by the Supplementary Conditions or Laws and Regulations which will include the interests of Owner, Contractor, Subcontractors, and Engineer, and any other individuals or entities identified in the Supplementary Conditions, and the officers, directors, members, partners, employees, agents, consultants and subcontractors of each and any of them, each of whom is deemed to have an insurable interest and shall be listed as a loss payee.

C. All the policies of insurance (and the certificates or other evidence thereof) required to be purchased and maintained in accordance with this Paragraph 5.06 will contain a provision or endorsement that the coverage afforded will not be canceled or materially changed or renewal refused until at least 30 days prior written notice has been given to Owner and Contractor and to each other loss payee to whom a certificate of insurance has been issued and will contain waiver provisions in accordance with Paragraph 5.07.

D. Owner shall not be responsible for purchasing and maintaining any property insurance specified in this Paragraph 5.06 to protect the interests of Contractor, Subcontractors, or others in the Work to the extent of any deductible amounts that are identified in the Supplementary Conditions. The risk of loss within such identified deductible amount will be borne by Contractor, Subcontractors, or others suffering any such loss, and if any of them wishes property insurance coverage within the limits of such amounts, each may purchase and maintain it at the purchaser's own expense.

Copyright © 2007 National Society of Professional Engineers for EJCDC. All rights reserved.

E. If Contractor requests in writing that other special insurance be included in the property insurance policies provided under this Paragraph 5.06, Owner shall, if possible, include such insurance, and the cost thereof will be charged to Contractor by appropriate Change Order. Prior to commencement of the Work at the Site, Owner shall in writing advise Contractor whether or not such other insurance has been procured by Owner.

5.07 *Waiver of Rights*

A. Owner and Contractor intend that all policies purchased in accordance with Paragraph 5.06 will protect Owner, Contractor, Subcontractors, and Engineer, and all other individuals or entities identified in the Supplementary Conditions as loss payees (and the officers, directors, members, partners, employees, agents, consultants, and subcontractors of each and any of them) in such policies and will provide primary coverage for all losses and damages caused by the perils or causes of loss covered thereby. All such policies shall contain provisions to the effect that in the event of payment of any loss or damage the insurers will have no rights of recovery against any of the insureds or loss payees thereunder. Owner and Contractor waive all rights against each other and their respective officers, directors, members, partners, employees, agents, consultants and subcontractors of each and any of them for all losses and damages caused by, arising out of or resulting from any of the perils or causes of loss covered by such policies and any other property insurance applicable to the Work; and, in addition, waive all such rights against Subcontractors and Engineer, and all other individuals or entities identified in the Supplementary Conditions as loss payees (and the officers, directors, members, partners, employees, agents, consultants, and subcontractors of each and any of them) under such policies for losses and damages so caused. None of the above waivers shall extend to the rights that any party making such waiver may have to the proceeds of insurance held by Owner as trustee or otherwise payable under any policy so issued.

B. Owner waives all rights against Contractor, Subcontractors, and Engineer, and the officers, directors, members, partners, employees, agents, consultants and subcontractors of each and any of them for:

1. loss due to business interruption, loss of use, or other consequential loss extending beyond direct physical loss or damage to Owner's property or the Work caused by, arising out of, or resulting from fire or other perils whether or not insured by Owner; and

2. loss or damage to the completed Project or part thereof caused by, arising out of, or resulting from fire or other insured peril or cause of loss covered by any property insurance maintained on the completed Project or part thereof by Owner during partial utilization pursuant to Paragraph 14.05, after Substantial Completion pursuant to Paragraph 14.04, or after final payment pursuant to Paragraph 14.07.

C. Any insurance policy maintained by Owner covering any loss, damage or consequential loss referred to in Paragraph 5.07.B shall contain provisions to the effect that in the event of payment of any such loss, damage, or consequential loss, the insurers will have no rights of recovery against Contractor, Subcontractors, or Engineer, and the officers, directors, members, partners, employees, agents, consultants and subcontractors of each and any of them.

Copyright © 2007 National Society of Professional Engineers for EJCDC. All rights reserved.

5.08 *Receipt and Application of Insurance Proceeds*

A. Any insured loss under the policies of insurance required by Paragraph 5.06 will be adjusted with Owner and made payable to Owner as fiduciary for the loss payees, as their interests may appear, subject to the requirements of any applicable mortgage clause and of Paragraph 5.08.B. Owner shall deposit in a separate account any money so received and shall distribute it in accordance with such agreement as the parties in interest may reach. If no other special agreement is reached, the damaged Work shall be repaired or replaced, the moneys so received applied on account thereof, and the Work and the cost thereof covered by an appropriate Change Order.

B. Owner as fiduciary shall have power to adjust and settle any loss with the insurers unless one of the parties in interest shall object in writing within 15 days after the occurrence of loss to Owner's exercise of this power. If such objection be made, Owner as fiduciary shall make settlement with the insurers in accordance with such agreement as the parties in interest may reach. If no such agreement among the parties in interest is reached, Owner as fiduciary shall adjust and settle the loss with the insurers and, if required in writing by any party in interest, Owner as fiduciary shall give bond for the proper performance of such duties.

5.09 *Acceptance of Bonds and Insurance; Option to Replace*

A. If either Owner or Contractor has any objection to the coverage afforded by or other provisions of the bonds or insurance required to be purchased and maintained by the other party in accordance with Article 5 on the basis of non-conformance with the Contract Documents, the objecting party shall so notify the other party in writing within 10 days after receipt of the certificates (or other evidence requested) required by Paragraph 2.01.B. Owner and Contractor shall each provide to the other such additional information in respect of insurance provided as the other may reasonably request. If either party does not purchase or maintain all of the bonds and insurance required of such party by the Contract Documents, such party shall notify the other party in writing of such failure to purchase prior to the start of the Work, or of such failure to maintain prior to any change in the required coverage. Without prejudice to any other right or remedy, the other party may elect to obtain equivalent bonds or insurance to protect such other party's interests at the expense of the party who was required to provide such coverage, and a Change Order shall be issued to adjust the Contract Price accordingly.

5.10 *Partial Utilization, Acknowledgment of Property Insurer*

A. If Owner finds it necessary to occupy or use a portion or portions of the Work prior to Substantial Completion of all the Work as provided in Paragraph 14.05, no such use or occupancy shall commence before the insurers providing the property insurance pursuant to Paragraph 5.06 have acknowledged notice thereof and in writing effected any changes in coverage necessitated thereby. The insurers providing the property insurance shall consent by endorsement on the policy or policies, but the property insurance shall not be canceled or permitted to lapse on account of any such partial use or occupancy.

Copyright © 2007 National Society of Professional Engineers for EJCDC. All rights reserved.

ARTICLE 6 – CONTRACTOR'S RESPONSIBILITIES

6.01 *Supervision and Superintendence*

A. Contractor shall supervise, inspect, and direct the Work competently and efficiently, devoting such attention thereto and applying such skills and expertise as may be necessary to perform the Work in accordance with the Contract Documents. Contractor shall be solely responsible for the means, methods, techniques, sequences, and procedures of construction. Contractor shall not be responsible for the negligence of Owner or Engineer in the design or specification of a specific means, method, technique, sequence, or procedure of construction which is shown or indicated in and expressly required by the Contract Documents.

B. At all times during the progress of the Work, Contractor shall assign a competent resident superintendent who shall not be replaced without written notice to Owner and Engineer except under extraordinary circumstances.

6.02 *Labor; Working Hours*

A. Contractor shall provide competent, suitably qualified personnel to survey and lay out the Work and perform construction as required by the Contract Documents. Contractor shall at all times maintain good discipline and order at the Site.

B. Except as otherwise required for the safety or protection of persons or the Work or property at the Site or adjacent thereto, and except as otherwise stated in the Contract Documents, all Work at the Site shall be performed during regular working hours. Contractor will not permit the performance of Work on a Saturday, Sunday, or any legal holiday without Owner's written consent (which will not be unreasonably withheld) given after prior written notice to Engineer.

6.03 *Services, Materials, and Equipment*

A. Unless otherwise specified in the Contract Documents, Contractor shall provide and assume full responsibility for all services, materials, equipment, labor, transportation, construction equipment and machinery, tools, appliances, fuel, power, light, heat, telephone, water, sanitary facilities, temporary facilities, and all other facilities and incidentals necessary for the performance, testing, start-up, and completion of the Work.

B. All materials and equipment incorporated into the Work shall be as specified or, if not specified, shall be of good quality and new, except as otherwise provided in the Contract Documents. All special warranties and guarantees required by the Specifications shall expressly run to the benefit of Owner. If required by Engineer, Contractor shall furnish satisfactory evidence (including reports of required tests) as to the source, kind, and quality of materials and equipment.

C. All materials and equipment shall be stored, applied, installed, connected, erected, protected, used, cleaned, and conditioned in accordance with instructions of the applicable Supplier, except as otherwise may be provided in the Contract Documents.

Copyright © 2007 National Society of Professional Engineers for EJCDC. All rights reserved.

6.04 *Progress Schedule*

A. Contractor shall adhere to the Progress Schedule established in accordance with Paragraph 2.07 as it may be adjusted from time to time as provided below.

1. Contractor shall submit to Engineer for acceptance (to the extent indicated in Paragraph 2.07) proposed adjustments in the Progress Schedule that will not result in changing the Contract Times. Such adjustments will comply with any provisions of the General Requirements applicable thereto.

2. Proposed adjustments in the Progress Schedule that will change the Contract Times shall be submitted in accordance with the requirements of Article 12. Adjustments in Contract Times may only be made by a Change Order.

6.05 *Substitutes and "Or-Equals"*

A. Whenever an item of material or equipment is specified or described in the Contract Documents by using the name of a proprietary item or the name of a particular Supplier, the specification or description is intended to establish the type, function, appearance, and quality required. Unless the specification or description contains or is followed by words reading that no like, equivalent, or "or-equal" item or no substitution is permitted, other items of material or equipment or material or equipment of other Suppliers may be submitted to Engineer for review under the circumstances described below.

1. *"Or-Equal" Items:* If in Engineer's sole discretion an item of material or equipment proposed by Contractor is functionally equal to that named and sufficiently similar so that no change in related Work will be required, it may be considered by Engineer as an "or-equal" item, in which case review and approval of the proposed item may, in Engineer's sole discretion, be accomplished without compliance with some or all of the requirements for approval of proposed substitute items. For the purposes of this Paragraph 6.05.A.1, a proposed item of material or equipment will be considered functionally equal to an item so named if:

a. in the exercise of reasonable judgment Engineer determines that:

1) it is at least equal in materials of construction, quality, durability, appearance, strength, and design characteristics;

2) it will reliably perform at least equally well the function and achieve the results imposed by the design concept of the completed Project as a functioning whole; and

3) it has a proven record of performance and availability of responsive service.

b. Contractor certifies that, if approved and incorporated into the Work:

1) there will be no increase in cost to the Owner or increase in Contract Times; and

2) it will conform substantially to the detailed requirements of the item named in the Contract Documents.

Copyright © 2007 National Society of Professional Engineers for EJCDC. All rights reserved.

2. *Substitute Items:*

   a. If in Engineer's sole discretion an item of material or equipment proposed by Contractor does not qualify as an "or-equal" item under Paragraph 6.05.A.1, it will be considered a proposed substitute item.

   b. Contractor shall submit sufficient information as provided below to allow Engineer to determine if the item of material or equipment proposed is essentially equivalent to that named and an acceptable substitute therefor. Requests for review of proposed substitute items of material or equipment will not be accepted by Engineer from anyone other than Contractor.

   c. The requirements for review by Engineer will be as set forth in Paragraph 6.05.A.2.d, as supplemented by the General Requirements, and as Engineer may decide is appropriate under the circumstances.

   d. Contractor shall make written application to Engineer for review of a proposed substitute item of material or equipment that Contractor seeks to furnish or use. The application:

      1) shall certify that the proposed substitute item will:

         a) perform adequately the functions and achieve the results called for by the general design,

         b) be similar in substance to that specified, and

         c) be suited to the same use as that specified;

      2) will state:

         a) the extent, if any, to which the use of the proposed substitute item will prejudice Contractor's achievement of Substantial Completion on time,

         b) whether use of the proposed substitute item in the Work will require a change in any of the Contract Documents (or in the provisions of any other direct contract with Owner for other work on the Project) to adapt the design to the proposed substitute item, and

         c) whether incorporation or use of the proposed substitute item in connection with the Work is subject to payment of any license fee or royalty;

      3) will identify:

         a) all variations of the proposed substitute item from that specified, and

         b) available engineering, sales, maintenance, repair, and replacement services; and

Copyright © 2007 National Society of Professional Engineers for EJCDC. All rights reserved.

4) shall contain an itemized estimate of all costs or credits that will result directly or indirectly from use of such substitute item, including costs of redesign and claims of other contractors affected by any resulting change.

B. *Substitute Construction Methods or Procedures:* If a specific means, method, technique, sequence, or procedure of construction is expressly required by the Contract Documents, Contractor may furnish or utilize a substitute means, method, technique, sequence, or procedure of construction approved by Engineer. Contractor shall submit sufficient information to allow Engineer, in Engineer's sole discretion, to determine that the substitute proposed is equivalent to that expressly called for by the Contract Documents. The requirements for review by Engineer will be similar to those provided in Paragraph 6.05.A.2.

C. *Engineer's Evaluation:*

1. During Bidding. The Contract, if awarded, will be on the basis of materials and equipment specified or described in the Bidding Documents, or "or-equal" materials and equipment as defined in paragraph 6.05 of the General Conditions, or those substitute materials and equipment approved by the Engineer and identified Addendum. The materials and equipment described in the Bidding Documents establish a standard of required type, function, and quality to be met by any proposed substitute or "or-equal" item. Request for Engineer's clarification of materials and equipment considered "or-equal" prior to the Effective Date of the Agreement must be received by the Engineer at least 5 days prior to the date for receipt of Bids. No item of material or equipment will be considered by Engineer as a substitute unless written request for approval has been submitted by Bidder and has been received by Engineer at least 15 days prior to the date for receipt of Bids. Request shall conform to the requirements of Paragraph 6.05 of the General Conditions. The burden of proof of the merit of the proposed item is upon the Bidder. Engineer's decision of approval or disapproval of a proposed item will be final. If Engineer approves any proposed substitute item, such approval will be set in an Addendum issued to all prospective Bidders. Bidders shall not rely upon approvals made in any other manner.

2. Engineer will be allowed a reasonable time within which to evaluate each proposal or submittal made pursuant to Paragraphs 6.05.A and 6.05.B. Engineer may require Contractor to furnish additional data about the proposed substitute item. Engineer will be the sole judge of acceptability. No "or equal" or substitute will be ordered, installed or utilized until Engineer's review is complete, which will be evidenced by a Change Order in the case of a substitute and an approved Shop Drawing for an "or equal." Engineer will advise Contractor in writing of any negative determination.

D. *Special Guarantee:* Owner may require Contractor to furnish at Contractor's expense a special performance guarantee or other surety with respect to any substitute.

E. *Engineer's Cost Reimbursement*: Engineer will record Engineer's costs in evaluating a substitute proposed or submitted by Contractor pursuant to Paragraphs 6.05.A.2 and 6.05.B. Whether or not Engineer approves a substitute so proposed or submitted by Contractor, Contractor shall reimburse Owner for the reasonable charges of Engineer for evaluating each such proposed substitute. Contractor shall also reimburse Owner for the reasonable charges of Engineer for

Copyright © 2007 National Society of Professional Engineers for EJCDC. All rights reserved.

making changes in the Contract Documents (or in the provisions of any other direct contract with Owner) resulting from the acceptance of each proposed substitute.

F. *Contractor's Expense*: Contractor shall provide all data in support of any proposed substitute or "or-equal" at Contractor's expense.

6.06 *Concerning Subcontractors, Suppliers, and Others*

A. Contractor shall not employ any Subcontractor, Supplier, or other individual or entity (including those acceptable to Owner as indicated in Paragraph 6.06.B), whether initially or as a replacement, against whom Owner may have reasonable objection. Contractor shall not be required to employ any Subcontractor, Supplier, or other individual or entity to furnish or perform any of the Work against whom Contractor has reasonable objection.

B. If the Supplementary Conditions require the identity of certain Subcontractors, Suppliers, or other individuals or entities to be submitted to Owner in advance for acceptance by Owner by a specified date prior to the Effective Date of the Agreement, and if Contractor has submitted a list thereof in accordance with the Supplementary Conditions, Owner's acceptance (either in writing or by failing to make written objection thereto by the date indicated for acceptance or objection in the Bidding Documents or the Contract Documents) of any such Subcontractor, Supplier, or other individual or entity so identified may be revoked on the basis of reasonable objection after due investigation. Contractor shall submit an acceptable replacement for the rejected Subcontractor, Supplier, or other individual or entity, and the Contract Price will be adjusted by the difference in the cost occasioned by such replacement, and an appropriate Change Order will be issued. No acceptance by Owner of any such Subcontractor, Supplier, or other individual or entity, whether initially or as a replacement, shall constitute a waiver of any right of Owner or Engineer to reject defective Work.

C. Contractor shall be fully responsible to Owner and Engineer for all acts and omissions of the Subcontractors, Suppliers, and other individuals or entities performing or furnishing any of the Work just as Contractor is responsible for Contractor's own acts and omissions. Nothing in the Contract Documents:

1. shall create for the benefit of any such Subcontractor, Supplier, or other individual or entity any contractual relationship between Owner or Engineer and any such Subcontractor, Supplier or other individual or entity; nor

2. shall create any obligation on the part of Owner or Engineer to pay or to see to the payment of any moneys due any such Subcontractor, Supplier, or other individual or entity except as may otherwise be required by Laws and Regulations.

D. Contractor shall be solely responsible for scheduling and coordinating the Work of Subcontractors, Suppliers, and other individuals or entities performing or furnishing any of the Work under a direct or indirect contract with Contractor.

E. Contractor shall require all Subcontractors, Suppliers, and such other individuals or entities performing or furnishing any of the Work to communicate with Engineer through Contractor.

Copyright © 2007 National Society of Professional Engineers for EJCDC. All rights reserved.

F. The divisions and sections of the Specifications and the identifications of any Drawings shall not control Contractor in dividing the Work among Subcontractors or Suppliers or delineating the Work to be performed by any specific trade.

G. All Work performed for Contractor by a Subcontractor or Supplier will be pursuant to an appropriate agreement between Contractor and the Subcontractor or Supplier which specifically binds the Subcontractor or Supplier to the applicable terms and conditions of the Contract Documents for the benefit of Owner and Engineer. Whenever any such agreement is with a Subcontractor or Supplier who is listed as a loss payee on the property insurance provided in Paragraph 5.06, the agreement between the Contractor and the Subcontractor or Supplier will contain provisions whereby the Subcontractor or Supplier waives all rights against Owner, Contractor, Engineer, and all other individuals or entities identified in the Supplementary Conditions to be listed as insureds or loss payees (and the officers, directors, members, partners, employees, agents, consultants, and subcontractors of each and any of them) for all losses and damages caused by, arising out of, relating to, or resulting from any of the perils or causes of loss covered by such policies and any other property insurance applicable to the Work. If the insurers on any such policies require separate waiver forms to be signed by any Subcontractor or Supplier, Contractor will obtain the same.

H. The Contractor shall not award work valued at more than fifty(50%) to the Contract Price to Subcontractor(s), without prior written approval of the Owner.

6.07 *Patent Fees and Royalties*

A. Contractor shall pay all license fees and royalties and assume all costs incident to the use in the performance of the Work or the incorporation in the Work of any invention, design, process, product, or device which is the subject of patent rights or copyrights held by others. If a particular invention, design, process, product, or device is specified in the Contract Documents for use in the performance of the Work and if, to the actual knowledge of Owner or Engineer, its use is subject to patent rights or copyrights calling for the payment of any license fee or royalty to others, the existence of such rights shall be disclosed by Owner in the Contract Documents.

B. To the fullest extent permitted by Laws and Regulations, Owner shall indemnify and hold harmless Contractor, and its officers, directors, members, partners, employees, agents, consultants, and subcontractors from and against all claims, costs, losses, and damages (including but not limited to all fees and charges of engineers, architects, attorneys, and other professionals, and all court or arbitration or other dispute resolution costs) arising out of or relating to any infringement of patent rights or copyrights incident to the use in the performance of the Work or resulting from the incorporation in the Work of any invention, design, process, product, or device specified in the Contract Documents, but not identified as being subject to payment of any license fee or royalty to others required by patent rights or copyrights.

C. To the fullest extent permitted by Laws and Regulations, Contractor shall indemnify and hold harmless Owner and Engineer, and the officers, directors, members, partners, employees, agents, consultants and subcontractors of each and any of them from and against all claims, costs, losses, and damages (including but not limited to all fees and charges of engineers, architects, attorneys, and other professionals and all court or arbitration or other dispute resolution costs) arising out of

Copyright © 2007 National Society of Professional Engineers for EJCDC. All rights reserved.

or relating to any infringement of patent rights or copyrights incident to the use in the performance of the Work or resulting from the incorporation in the Work of any invention, design, process, product, or device not specified in the Contract Documents.

6.08 *Permits*

A. Unless otherwise provided in the Supplementary Conditions, Contractor shall obtain and pay for all construction permits and licenses. Owner shall assist Contractor, when necessary, in obtaining such permits and licenses. Contractor shall pay all governmental charges and inspection fees necessary for the prosecution of the Work which are applicable at the time of opening of Bids, or, if there are no Bids, on the Effective Date of the Agreement. Owner shall pay all charges of utility owners for connections for providing permanent service to the Work.

B. The Owner has obtained an IEPA Construction Permit for the Project. The Owner has obtained permits(see attachments) from the various county and township highway departments for construction within their rights-of-way. Note however, that these permits do not supersede any seasonal weight limitation on any local road.

6.09 *Laws and Regulations*

A. Contractor shall give all notices required by and shall comply with all Laws and Regulations applicable to the performance of the Work. Except where otherwise expressly required by applicable Laws and Regulations, neither Owner nor Engineer shall be responsible for monitoring Contractor's compliance with any Laws or Regulations.

B. If Contractor performs any Work knowing or having reason to know that it is contrary to Laws or Regulations, Contractor shall bear all claims, costs, losses, and damages (including but not limited to all fees and charges of engineers, architects, attorneys, and other professionals and all court or arbitration or other dispute resolution costs) arising out of or relating to such Work. However, it shall not be Contractor's responsibility to make certain that the Specifications and Drawings are in accordance with Laws and Regulations, but this shall not relieve Contractor of Contractor's obligations under Paragraph 3.03.

C. Changes in Laws or Regulations not known at the time of opening of Bids (or, on the Effective Date of the Agreement if there were no Bids) having an effect on the cost or time of performance of the Work shall be the subject of an adjustment in Contract Price or Contract Times. If Owner and Contractor are unable to agree on entitlement to or on the amount or extent, if any, of any such adjustment, a Claim may be made therefor as provided in Paragraph 10.05.

6.10 *Taxes*

A. Contractor shall pay all sales, consumer, use, and other similar taxes required to be paid by Contractor in accordance with the Laws and Regulations of the place of the Project which are applicable during the performance of the Work.

B. Owner is exempt from payment of sales and compensating use taxes of Illinois and cities and counties thereof on all materials to be incorporated into the Work.

Copyright © 2007 National Society of Professional Engineers for EJCDC. All rights reserved.

1. Owner will furnish the required certificates of tax exemption to the contractor for use in the purchase of supplies and materials to be incorporated into the Work.

2. Owner's exemption does not apply to construction tools, machinery, equipment, or other property purchased by or leased by Contractor, or to the supplies or materials not incorporated into the Work.

6.11 *Use of Site and Other Areas*

A. *Limitation on Use of Site and Other Areas:*

1. Contractor shall confine construction equipment, the storage of materials and equipment, and the operations of workers to the Site and other areas permitted by Laws and Regulations, and shall not unreasonably encumber the Site and other areas with construction equipment or other materials or equipment. Contractor shall assume full responsibility for any damage to any such land or area, or to the owner or occupant thereof, or of any adjacent land or areas resulting from the performance of the Work.

2. Should any claim be made by any such owner or occupant because of the performance of the Work, Contractor shall promptly settle with such other party by negotiation or otherwise resolve the claim by arbitration or other dispute resolution proceeding or at law.

3. To the fullest extent permitted by Laws and Regulations, Contractor shall indemnify and hold harmless Owner and Engineer, and the officers, directors, members, partners, employees, agents, consultants and subcontractors of each and any of them from and against all claims, costs, losses, and damages (including but not limited to all fees and charges of engineers, architects, attorneys, and other professionals and all court or arbitration or other dispute resolution costs) arising out of or relating to any claim or action, legal or equitable, brought by any such owner or occupant against Owner, Engineer, or any other party indemnified hereunder to the extent caused by or based upon Contractor's performance of the Work.

B. *Removal of Debris During Performance of the Work:* During the progress of the Work Contractor shall keep the Site and other areas free from accumulations of waste materials, rubbish, and other debris. Removal and disposal of such waste materials, rubbish, and other debris shall conform to applicable Laws and Regulations.

C. *Cleaning:* Prior to Substantial Completion of the Work Contractor shall clean the Site and the Work and make it ready for utilization by Owner. At the completion of the Work Contractor shall remove from the Site all tools, appliances, construction equipment and machinery, and surplus materials and shall restore to original condition all property not designated for alteration by the Contract Documents.

D. *Loading Structures:* Contractor shall not load nor permit any part of any structure to be loaded in any manner that will endanger the structure, nor shall Contractor subject any part of the Work or adjacent property to stresses or pressures that will endanger it.

Copyright © 2007 National Society of Professional Engineers for EJCDC. All rights reserved.

6.12 *Record Documents*

A. Contractor shall maintain in a safe place at the Site one record copy of all Drawings, Specifications, Addenda, Change Orders, Work Change Directives, Field Orders, and written interpretations and clarifications in good order and annotated to show changes made during construction. These record documents together with all approved Samples and a counterpart of all approved Shop Drawings will be available to Engineer for reference. Upon completion of the Work, these record documents, Samples, and Shop Drawings will be delivered to Engineer for Owner.

6.13 *Safety and Protection*

A. Contractor shall be solely responsible for initiating, maintaining and supervising all safety precautions and programs in connection with the Work. Such responsibility does not relieve Subcontractors of their responsibility for the safety of persons or property in the performance of their work, nor for compliance with applicable safety Laws and Regulations. Contractor shall take all necessary precautions for the safety of, and shall provide the necessary protection to prevent damage, injury or loss to:

1. all persons on the Site or who may be affected by the Work;

2. all the Work and materials and equipment to be incorporated therein, whether in storage on or off the Site; and

3. other property at the Site or adjacent thereto, including trees, shrubs, lawns, walks, pavements, roadways, structures, utilities, and Underground Facilities not designated for removal, relocation, or replacement in the course of construction.

B. Contractor shall comply with all applicable Laws and Regulations relating to the safety of persons or property, or to the protection of persons or property from damage, injury, or loss; and shall erect and maintain all necessary safeguards for such safety and protection. Contractor shall notify owners of adjacent property and of Underground Facilities and other utility owners when prosecution of the Work may affect them, and shall cooperate with them in the protection, removal, relocation, and replacement of their property.

C. Contractor shall comply with the applicable requirements of Owner's safety programs, if any. The Supplementary Conditions identify any Owner's safety programs that are applicable to the Work.

D. Contractor shall inform Owner and Engineer of the specific requirements of Contractor's safety program with which Owner's and Engineer's employees and representatives must comply while at the Site.

E. All damage, injury, or loss to any property referred to in Paragraph 6.13.A.2 or 6.13.A.3 caused, directly or indirectly, in whole or in part, by Contractor, any Subcontractor, Supplier, or any other individual or entity directly or indirectly employed by any of them to perform any of the Work, or anyone for whose acts any of them may be liable, shall be remedied by Contractor (except damage or loss attributable to the fault of Drawings or Specifications or to the acts or omissions

Copyright © 2007 National Society of Professional Engineers for EJCDC. All rights reserved.

of Owner or Engineer or anyone employed by any of them, or anyone for whose acts any of them may be liable, and not attributable, directly or indirectly, in whole or in part, to the fault or negligence of Contractor or any Subcontractor, Supplier, or other individual or entity directly or indirectly employed by any of them).

F. Contractor's duties and responsibilities for safety and for protection of the Work shall continue until such time as all the Work is completed and Engineer has issued a notice to Owner and Contractor in accordance with Paragraph 14.07.B that the Work is acceptable (except as otherwise expressly provided in connection with Substantial Completion).

6.14 *Safety Representative*

A. Contractor shall designate a qualified and experienced safety representative at the Site whose duties and responsibilities shall be the prevention of accidents and the maintaining and supervising of safety precautions and programs.

6.15 *Hazard Communication Programs*

A. Contractor shall be responsible for coordinating any exchange of material safety data sheets or other hazard communication information required to be made available to or exchanged between or among employers at the Site in accordance with Laws or Regulations.

6.16 *Emergencies*

A. In emergencies affecting the safety or protection of persons or the Work or property at the Site or adjacent thereto, Contractor is obligated to act to prevent threatened damage, injury, or loss. Contractor shall give Engineer prompt written notice if Contractor believes that any significant changes in the Work or variations from the Contract Documents have been caused thereby or are required as a result thereof. If Engineer determines that a change in the Contract Documents is required because of the action taken by Contractor in response to such an emergency, a Work Change Directive or Change Order will be issued.

6.17 *Shop Drawings and Samples*

A. Contractor shall submit Shop Drawings and Samples to Engineer for review and approval in accordance with the accepted Schedule of Submittals (as required by Paragraph 2.07). Each submittal will be identified as Engineer may require.

1. *Shop Drawings:*

a. Submit number of copies specified in the General Requirements.

b. Data shown on the Shop Drawings will be complete with respect to quantities, dimensions, specified performance and design criteria, materials, and similar data to show Engineer the services, materials, and equipment Contractor proposes to provide and to enable Engineer to review the information for the limited purposes required by Paragraph 6.17.D.

Copyright © 2007 National Society of Professional Engineers for EJCDC. All rights reserved.

2. *Samples:*

    a. Submit number of Samples specified in the Specifications.

    b. Clearly identify each Sample as to material, Supplier, pertinent data such as catalog numbers, the use for which intended and other data as Engineer may require to enable Engineer to review the submittal for the limited purposes required by Paragraph 6.17.D.

B. Where a Shop Drawing or Sample is required by the Contract Documents or the Schedule of Submittals, any related Work performed prior to Engineer's review and approval of the pertinent submittal will be at the sole expense and responsibility of Contractor.

C. *Submittal Procedures:*

1. Before submitting each Shop Drawing or Sample, Contractor shall have:

    a. reviewed and coordinated each Shop Drawing or Sample with other Shop Drawings and Samples and with the requirements of the Work and the Contract Documents;

    b. determined and verified all field measurements, quantities, dimensions, specified performance and design criteria, installation requirements, materials, catalog numbers, and similar information with respect thereto;

    c. determined and verified the suitability of all materials offered with respect to the indicated application, fabrication, shipping, handling, storage, assembly, and installation pertaining to the performance of the Work; and

    d. determined and verified all information relative to Contractor's responsibilities for means, methods, techniques, sequences, and procedures of construction, and safety precautions and programs incident thereto.

2. Each submittal shall bear a stamp or specific written certification that Contractor has satisfied Contractor's obligations under the Contract Documents with respect to Contractor's review and approval of that submittal.

3. With each submittal, Contractor shall give Engineer specific written notice of any variations that the Shop Drawing or Sample may have from the requirements of the Contract Documents. This notice shall be both a written communication separate from the Shop Drawings or Sample submittal; and, in addition, by a specific notation made on each Shop Drawing or Sample submitted to Engineer for review and approval of each such variation.

D. *Engineer's Review:*

1. Engineer will provide timely review of Shop Drawings and Samples in accordance with the Schedule of Submittals acceptable to Engineer. Engineer's review and approval will be only to determine if the items covered by the submittals will, after installation or incorporation in the Work, conform to the information given in the Contract Documents and be compatible

Copyright © 2007 National Society of Professional Engineers for EJCDC. All rights reserved.

with the design concept of the completed Project as a functioning whole as indicated by the Contract Documents.

2. Engineer's review and approval will not extend to means, methods, techniques, sequences, or procedures of construction (except where a particular means, method, technique, sequence, or procedure of construction is specifically and expressly called for by the Contract Documents) or to safety precautions or programs incident thereto. The review and approval of a separate item as such will not indicate approval of the assembly in which the item functions.

3. Engineer's review and approval shall not relieve Contractor from responsibility for any variation from the requirements of the Contract Documents unless Contractor has complied with the requirements of Paragraph 6.17.C.3 and Engineer has given written approval of each such variation by specific written notation thereof incorporated in or accompanying the Shop Drawing or Sample. Engineer's review and approval shall not relieve Contractor from responsibility for complying with the requirements of Paragraph 6.17.C.1.

E. *Resubmittal Procedures:*

1. Contractor shall make corrections required by Engineer and shall return the required number of corrected copies of Shop Drawings and submit, as required, new Samples for review and approval. Contractor shall direct specific attention in writing to revisions other than the corrections called for by Engineer on previous submittals.

6.18 *Continuing the Work*

A. Contractor shall carry on the Work and adhere to the Progress Schedule during all disputes or disagreements with Owner. No Work shall be delayed or postponed pending resolution of any disputes or disagreements, except as permitted by Paragraph 15.04 or as Owner and Contractor may otherwise agree in writing.

6.19 *Contractor's General Warranty and Guarantee*

A. Contractor warrants and guarantees to Owner that all Work will be in accordance with the Contract Documents and will not be defective. Engineer and its officers, directors, members, partners, employees, agents, consultants, and subcontractors shall be entitled to rely on representation of Contractor's warranty and guarantee.

B. Contractor's warranty and guarantee hereunder excludes defects or damage caused by:

1. abuse, modification, or improper maintenance or operation by persons other than Contractor, Subcontractors, Suppliers, or any other individual or entity for whom Contractor is responsible; or

2. normal wear and tear under normal usage.

C. Contractor's obligation to perform and complete the Work in accordance with the Contract Documents shall be absolute. None of the following will constitute an acceptance of Work that is

Copyright © 2007 National Society of Professional Engineers for EJCDC. All rights reserved.

not in accordance with the Contract Documents or a release of Contractor's obligation to perform the Work in accordance with the Contract Documents:

1. observations by Engineer;

2. recommendation by Engineer or payment by Owner of any progress or final payment;

3. the issuance of a certificate of Substantial Completion by Engineer or any payment related thereto by Owner;

4. use or occupancy of the Work or any part thereof by Owner;

5. any review and approval of a Shop Drawing or Sample submittal or the issuance of a notice of acceptability by Engineer;

6. any inspection, test, or approval by others; or

7. any correction of defective Work by Owner.

6.20 *Indemnification*

A. To the fullest extent permitted by Laws and Regulations, Contractor shall indemnify and hold harmless Owner and Engineer, and the officers, directors, members, partners, employees, agents, consultants and subcontractors of each and any of them from and against all claims, costs, losses, and damages (including but not limited to all fees and charges of engineers, architects, attorneys, and other professionals and all court or arbitration or other dispute resolution costs) arising out of or relating to the performance of the Work, provided that any such claim, cost, loss, or damage is attributable to bodily injury, sickness, disease, or death, or to injury to or destruction of tangible property (other than the Work itself), including the loss of use resulting therefrom but only to the extent caused by any negligent act or omission of Contractor, any Subcontractor, any Supplier, or any individual or entity directly or indirectly employed by any of them to perform any of the Work or anyone for whose acts any of them may be liable .

B. In any and all claims against Owner or Engineer or any of their officers, directors, members, partners, employees, agents, consultants, or subcontractors by any employee (or the survivor or personal representative of such employee) of Contractor, any Subcontractor, any Supplier, or any individual or entity directly or indirectly employed by any of them to perform any of the Work, or anyone for whose acts any of them may be liable, the indemnification obligation under Paragraph 6.20.A shall not be limited in any way by any limitation on the amount or type of damages, compensation, or benefits payable by or for Contractor or any such Subcontractor, Supplier, or other individual or entity under workers' compensation acts, disability benefit acts, or other employee benefit acts.

C. The indemnification obligations of Contractor under Paragraph 6.20.A shall not extend to the liability of Engineer and Engineer's officers, directors, members, partners, employees, agents, consultants and subcontractors arising out of:

Copyright © 2007 National Society of Professional Engineers for EJCDC. All rights reserved.

1. the preparation or approval of, or the failure to prepare or approve maps, Drawings, opinions, reports, surveys, Change Orders, designs, or Specifications; or

2. giving directions or instructions, or failing to give them, if that is the primary cause of the injury or damage.

6.21 *Delegation of Professional Design Services*

A. Contractor will not be required to provide professional design services unless such services are specifically required by the Contract Documents for a portion of the Work or unless such services are required to carry out Contractor's responsibilities for construction means, methods, techniques, sequences and procedures. Contractor shall not be required to provide professional services in violation of applicable law.

B. If professional design services or certifications by a design professional related to systems, materials or equipment are specifically required of Contractor by the Contract Documents, Owner and Engineer will specify all performance and design criteria that such services must satisfy. Contractor shall cause such services or certifications to be provided by a properly licensed professional, whose signature and seal shall appear on all drawings, calculations, specifications, certifications, Shop Drawings and other submittals prepared by such professional. Shop Drawings and other submittals related to the Work designed or certified by such professional, if prepared by others, shall bear such professional's written approval when submitted to Engineer.

C. Owner and Engineer shall be entitled to rely upon the adequacy, accuracy and completeness of the services, certifications or approvals performed by such design professionals, provided Owner and Engineer have specified to Contractor all performance and design criteria that such services must satisfy.

D. Pursuant to this Paragraph 6.21, Engineer's review and approval of design calculations and design drawings will be only for the limited purpose of checking for conformance with performance and design criteria given and the design concept expressed in the Contract Documents. Engineer's review and approval of Shop Drawings and other submittals (except design calculations and design drawings) will be only for the purpose stated in Paragraph 6.17.D.1.

E. Contractor shall not be responsible for the adequacy of the performance or design criteria required by the Contract Documents.

ARTICLE 7 – OTHER WORK AT THE SITE

7.01 *Related Work at Site*

A. Owner may perform other work related to the Project at the Site with Owner's employees, or through other direct contracts therefor, or have other work performed by utility owners. If such other work is not noted in the Contract Documents, then:

1. written notice thereof will be given to Contractor prior to starting any such other work; and

Copyright © 2007 National Society of Professional Engineers for EJCDC. All rights reserved.

2. if Owner and Contractor are unable to agree on entitlement to or on the amount or extent, if any, of any adjustment in the Contract Price or Contract Times that should be allowed as a result of such other work, a Claim may be made therefor as provided in Paragraph 10.05.

B. Contractor shall afford each other contractor who is a party to such a direct contract, each utility owner, and Owner, if Owner is performing other work with Owner's employees, proper and safe access to the Site, provide a reasonable opportunity for the introduction and storage of materials and equipment and the execution of such other work, and properly coordinate the Work with theirs. Contractor shall do all cutting, fitting, and patching of the Work that may be required to properly connect or otherwise make its several parts come together and properly integrate with such other work. Contractor shall not endanger any work of others by cutting, excavating, or otherwise altering such work; provided, however, that Contractor may cut or alter others' work with the written consent of Engineer and the others whose work will be affected. The duties and responsibilities of Contractor under this Paragraph are for the benefit of such utility owners and other contractors to the extent that there are comparable provisions for the benefit of Contractor in said direct contracts between Owner and such utility owners and other contractors.

C. If the proper execution or results of any part of Contractor's Work depends upon work performed by others under this Article 7, Contractor shall inspect such other work and promptly report to Engineer in writing any delays, defects, or deficiencies in such other work that render it unavailable or unsuitable for the proper execution and results of Contractor's Work. Contractor's failure to so report will constitute an acceptance of such other work as fit and proper for integration with Contractor's Work except for latent defects and deficiencies in such other work.

7.02 *Coordination*

A. The Contractor shall have the authority and be responsible for coordination of the activities among the other prime contractors and subcontractors on the Site to ensure a safe, efficient working environment. This authority covers scheduling delivery of materials, storage of materials, sequencing of construction involving different crafts, resolving interface issues between crafts, scheduling testing, and all other aspects of the Work that do not impact the design or function of the Work.

7.03 *Legal Relationships*

A. Paragraphs 7.01.A and 7.02 are not applicable for utilities not under the control of Owner.

B. Each other direct contract of Owner under Paragraph 7.01.A shall provide that the other contractor is liable to Owner and Contractor for the reasonable direct delay and disruption costs incurred by Contractor as a result of the other contractor's wrongful actions or inactions.

C. Contractor shall be liable to Owner and any other contractor under direct contract to Owner for the reasonable direct delay and disruption costs incurred by such other contractor as a result of Contractor's wrongful action or inactions.

Copyright © 2007 National Society of Professional Engineers for EJCDC. All rights reserved.

ARTICLE 8 – OWNER'S RESPONSIBILITIES

8.01 *Communications to Contractor*

A. Except as otherwise provided in these General Conditions, Owner shall issue all communications to Contractor through Engineer.

8.02 *Replacement of Engineer*

A. In case of termination of the employment of Engineer, Owner shall appoint an engineer to whom Contractor makes no reasonable objection, whose status under the Contract Documents shall be that of the former Engineer.

8.03 *Furnish Data*

A. Owner shall promptly furnish the data required of Owner under the Contract Documents.

8.04 *Pay When Due*

A. Owner shall make payments to Contractor when they are due as provided in Paragraphs 14.02.C and 14.07.C.

8.05 *Lands and Easements; Reports and Tests*

A. Owner's duties with respect to providing lands and easements and providing engineering surveys to establish reference points are set forth in Paragraphs 4.01 and 4.05. Paragraph 4.02 refers to Owner's identifying and making available to Contractor copies of reports of explorations and tests of subsurface conditions and drawings of physical conditions relating to existing surface or subsurface structures at the Site.

8.06 *Insurance*

A. Owner's responsibilities, if any, with respect to purchasing and maintaining liability and property insurance are set forth in Article 5.

8.07 *Change Orders*

A. Owner is obligated to execute Change Orders as indicated in Paragraph 10.03.

8.08 *Inspections, Tests, and Approvals*

A. Owner's responsibility with respect to certain inspections, tests, and approvals is set forth in Paragraph 13.03.B.

8.09 *Limitations on Owner's Responsibilities*

A. The Owner shall not supervise, direct, or have control or authority over, nor be responsible for, Contractor's means, methods, techniques, sequences, or procedures of construction, or the safety precautions and programs incident thereto, or for any failure of Contractor to comply with Laws

Copyright © 2007 National Society of Professional Engineers for EJCDC. All rights reserved.

and Regulations applicable to the performance of the Work. Owner will not be responsible for Contractor's failure to perform the Work in accordance with the Contract Documents.

8.10 *Undisclosed Hazardous Environmental Condition*

A. Owner's responsibility in respect to an undisclosed Hazardous Environmental Condition is set forth in Paragraph 4.06.

8.11 *Evidence of Financial Arrangements*

A. Upon request of Contractor, Owner shall furnish Contractor reasonable evidence that financial arrangements have been made to satisfy Owner's obligations under the Contract Documents.

8.12 *Compliance with Safety Program*

A. While at the Site, Owner's employees and representatives shall comply with the specific applicable requirements of Contractor's safety programs of which Owner has been informed pursuant to Paragraph 6.13.D.

ARTICLE 9 – ENGINEER'S STATUS DURING CONSTRUCTION

9.01 *Owner's Representative*

A. Engineer will be Owner's representative during the construction period. The duties and responsibilities and the limitations of authority of Engineer as Owner's representative during construction are set forth in the Contract Documents.

9.02 *Visits to Site*

A. Engineer will make visits to the Site at intervals appropriate to the various stages of construction as Engineer deems necessary in order to observe as an experienced and qualified design professional the progress that has been made and the quality of the various aspects of Contractor's executed Work. Based on information obtained during such visits and observations, Engineer, for the benefit of Owner, will determine, in general, if the Work is proceeding in accordance with the Contract Documents. Engineer will not be required to make exhaustive or continuous inspections on the Site to check the quality or quantity of the Work. Engineer's efforts will be directed toward providing for Owner a greater degree of confidence that the completed Work will conform generally to the Contract Documents. On the basis of such visits and observations, Engineer will keep Owner informed of the progress of the Work and will endeavor to guard Owner against defective Work.

B. Engineer's visits and observations are subject to all the limitations on Engineer's authority and responsibility set forth in Paragraph 9.09. Particularly, but without limitation, during or as a result of Engineer's visits or observations of Contractor's Work, Engineer will not supervise, direct, control, or have authority over or be responsible for Contractor's means, methods, techniques, sequences, or procedures of construction, or the safety precautions and programs incident thereto, or for any failure of Contractor to comply with Laws and Regulations applicable to the performance of the Work.

Copyright © 2007 National Society of Professional Engineers for EJCDC. All rights reserved.

9.03 *Project Representative*

A. If Owner and Engineer agree, Engineer will furnish a Resident Project Representative to assist Engineer in providing more extensive observation of the Work. The authority and responsibilities of any such Resident Project Representative and assistants will be as provided in the Supplementary Conditions, and limitations on the responsibilities thereof will be as provided in Paragraph 9.09. If Owner designates another representative or agent to represent Owner at the Site who is not Engineer's consultant, agent or employee, the responsibilities and authority and limitations thereon of such other individual or entity will be as provided in the Supplementary Conditions. The Engineer will provide Resident Project Representative services for this project. The Duties, Responsibilities, and Limitations of Authority of the Resident Project Representative will be as stated in Exhibit D of the Agreement Between Owner and Engineer, E-500, 2008 Edition, as amended and executed for this specific Project.

9.04 *Authorized Variations in Work*

A. Engineer may authorize minor variations in the Work from the requirements of the Contract Documents which do not involve an adjustment in the Contract Price or the Contract Times and are compatible with the design concept of the completed Project as a functioning whole as indicated by the Contract Documents. These may be accomplished by a Field Order and will be binding on Owner and also on Contractor, who shall perform the Work involved promptly. If Owner or Contractor believes that a Field Order justifies an adjustment in the Contract Price or Contract Times, or both, and the parties are unable to agree on entitlement to or on the amount or extent, if any, of any such adjustment, a Claim may be made therefor as provided in Paragraph 10.05.

9.05 *Rejecting Defective Work*

A. Engineer will have authority to reject Work which Engineer believes to be defective, or that Engineer believes will not produce a completed Project that conforms to the Contract Documents or that will prejudice the integrity of the design concept of the completed Project as a functioning whole as indicated by the Contract Documents. Engineer will also have authority to require special inspection or testing of the Work as provided in Paragraph 13.04, whether or not the Work is fabricated, installed, or completed.

9.06 *Shop Drawings, Change Orders and Payments*

A. In connection with Engineer's authority, and limitations thereof, as to Shop Drawings and Samples, see Paragraph 6.17.

B. In connection with Engineer's authority, and limitations thereof, as to design calculations and design drawings submitted in response to a delegation of professional design services, if any, see Paragraph 6.21.

C. In connection with Engineer's authority as to Change Orders, see Articles 10, 11, and 12.

D. In connection with Engineer's authority as to Applications for Payment, see Article 14.

Copyright © 2007 National Society of Professional Engineers for EJCDC. All rights reserved.

9.07 *Determinations for Unit Price Work*

A. Engineer will determine the actual quantities and classifications of Unit Price Work performed by Contractor. Engineer will review with Contractor the Engineer's preliminary determinations on such matters before rendering a written decision thereon (by recommendation of an Application for Payment or otherwise). Engineer's written decision thereon will be final and binding (except as modified by Engineer to reflect changed factual conditions or more accurate data) upon Owner and Contractor, subject to the provisions of Paragraph 10.05.

9.08 *Decisions on Requirements of Contract Documents and Acceptability of Work*

A. Engineer will be the initial interpreter of the requirements of the Contract Documents and judge of the acceptability of the Work thereunder. All matters in question and other matters between Owner and Contractor arising prior to the date final payment is due relating to the acceptability of the Work, and the interpretation of the requirements of the Contract Documents pertaining to the performance of the Work, will be referred initially to Engineer in writing within 30 days of the event giving rise to the question.

B. Engineer will, with reasonable promptness, render a written decision on the issue referred. If Owner or Contractor believes that any such decision entitles them to an adjustment in the Contract Price or Contract Times or both, a Claim may be made under Paragraph 10.05. The date of Engineer's decision shall be the date of the event giving rise to the issues referenced for the purposes of Paragraph 10.05.B.

C. Engineer's written decision on the issue referred will be final and binding on Owner and Contractor, subject to the provisions of Paragraph 10.05.

D. When functioning as interpreter and judge under this Paragraph 9.08, Engineer will not show partiality to Owner or Contractor and will not be liable in connection with any interpretation or decision rendered in good faith in such capacity.

9.09 *Limitations on Engineer's Authority and Responsibilities*

A. Neither Engineer's authority or responsibility under this Article 9 or under any other provision of the Contract Documents nor any decision made by Engineer in good faith either to exercise or not exercise such authority or responsibility or the undertaking, exercise, or performance of any authority or responsibility by Engineer shall create, impose, or give rise to any duty in contract, tort, or otherwise owed by Engineer to Contractor, any Subcontractor, any Supplier, any other individual or entity, or to any surety for or employee or agent of any of them.

B. Engineer will not supervise, direct, control, or have authority over or be responsible for Contractor's means, methods, techniques, sequences, or procedures of construction, or the safety precautions and programs incident thereto, or for any failure of Contractor to comply with Laws and Regulations applicable to the performance of the Work. Engineer will not be responsible for Contractor's failure to perform the Work in accordance with the Contract Documents.

C. Engineer will not be responsible for the acts or omissions of Contractor or of any Subcontractor, any Supplier, or of any other individual or entity performing any of the Work.

Copyright © 2007 National Society of Professional Engineers for EJCDC. All rights reserved.

D. Engineer's review of the final Application for Payment and accompanying documentation and all maintenance and operating instructions, schedules, guarantees, bonds, certificates of inspection, tests and approvals, and other documentation required to be delivered by Paragraph 14.07.A will only be to determine generally that their content complies with the requirements of, and in the case of certificates of inspections, tests, and approvals that the results certified indicate compliance with, the Contract Documents.

E. The limitations upon authority and responsibility set forth in this Paragraph 9.09 shall also apply to the Resident Project Representative, if any, and assistants, if any.

9.10 *Compliance with Safety Program*

A. While at the Site, Engineer's employees and representatives shall comply with the specific applicable requirements of Contractor's safety programs of which Engineer has been informed pursuant to Paragraph 6.13.D.

ARTICLE 10 – CHANGES IN THE WORK; CLAIMS

10.01 *Authorized Changes in the Work*

A. Without invalidating the Contract and without notice to any surety, Owner may, at any time or from time to time, order additions, deletions, or revisions in the Work by a Change Order, or a Work Change Directive. Upon receipt of any such document, Contractor shall promptly proceed with the Work involved which will be performed under the applicable conditions of the Contract Documents (except as otherwise specifically provided).

B. If Owner and Contractor are unable to agree on entitlement to, or on the amount or extent, if any, of an adjustment in the Contract Price or Contract Times, or both, that should be allowed as a result of a Work Change Directive, a Claim may be made therefor as provided in Paragraph 10.05.

10.02 *Unauthorized Changes in the Work*

A. Contractor shall not be entitled to an increase in the Contract Price or an extension of the Contract Times with respect to any work performed that is not required by the Contract Documents as amended, modified, or supplemented as provided in Paragraph 3.04, except in the case of an emergency as provided in Paragraph 6.16 or in the case of uncovering Work as provided in Paragraph 13.04.D.

10.03 *Execution of Change Orders*

A. Owner and Contractor shall execute appropriate Change Orders recommended by Engineer covering:

1. changes in the Work which are: (i) ordered by Owner pursuant to Paragraph 10.01.A, (ii) required because of acceptance of defective Work under Paragraph 13.08.A or Owner's correction of defective Work under Paragraph 13.09, or (iii) agreed to by the parties;

Copyright © 2007 National Society of Professional Engineers for EJCDC. All rights reserved.

2. changes in the Contract Price or Contract Times which are agreed to by the parties, including any undisputed sum or amount of time for Work actually performed in accordance with a Work Change Directive; and

3. changes in the Contract Price or Contract Times which embody the substance of any written decision rendered by Engineer pursuant to Paragraph 10.05; provided that, in lieu of executing any such Change Order, an appeal may be taken from any such decision in accordance with the provisions of the Contract Documents and applicable Laws and Regulations, but during any such appeal, Contractor shall carry on the Work and adhere to the Progress Schedule as provided in Paragraph 6.18.A.

10.04 *Notification to Surety*

A. If the provisions of any bond require notice to be given to a surety of any change affecting the general scope of the Work or the provisions of the Contract Documents (including, but not limited to, Contract Price or Contract Times), the giving of any such notice will be Contractor's responsibility. The amount of each applicable bond will be adjusted to reflect the effect of any such change.

10.05 *Claims*

A. *Engineer's Decision Required*: All Claims, except those waived pursuant to Paragraph 14.09, shall be referred to the Engineer for decision. A decision by Engineer shall be required as a condition precedent to any exercise by Owner or Contractor of any rights or remedies either may otherwise have under the Contract Documents or by Laws and Regulations in respect of such Claims.

B. *Notice:* Written notice stating the general nature of each Claim shall be delivered by the claimant to Engineer and the other party to the Contract promptly (but in no event later than 30 days) after the start of the event giving rise thereto. The responsibility to substantiate a Claim shall rest with the party making the Claim. Notice of the amount or extent of the Claim, with supporting data shall be delivered to the Engineer and the other party to the Contract within 60 days after the start of such event (unless Engineer allows additional time for claimant to submit additional or more accurate data in support of such Claim). A Claim for an adjustment in Contract Price shall be prepared in accordance with the provisions of Paragraph 12.01.B. A Claim for an adjustment in Contract Times shall be prepared in accordance with the provisions of Paragraph 12.02.B. Each Claim shall be accompanied by claimant's written statement that the adjustment claimed is the entire adjustment to which the claimant believes it is entitled as a result of said event. The opposing party shall submit any response to Engineer and the claimant within 30 days after receipt of the claimant's last submittal (unless Engineer allows additional time).

C. *Engineer's Action*: Engineer will review each Claim and, within 30 days after receipt of the last submittal of the claimant or the last submittal of the opposing party, if any, take one of the following actions in writing:

1. deny the Claim in whole or in part;

2. approve the Claim; or

Copyright © 2007 National Society of Professional Engineers for EJCDC. All rights reserved.

3. notify the parties that the Engineer is unable to resolve the Claim if, in the Engineer's sole discretion, it would be inappropriate for the Engineer to do so. For purposes of further resolution of the Claim, such notice shall be deemed a denial.

D. In the event that Engineer does not take action on a Claim within said 30 days, the Claim shall be deemed denied.

E. Engineer's written action under Paragraph 10.05.C or denial pursuant to Paragraphs 10.05.C.3 or 10.05.D will be final and binding upon Owner and Contractor, unless Owner or Contractor invoke the dispute resolution procedure set forth in Article 16 within 30 days of such action or denial.

F. No Claim for an adjustment in Contract Price or Contract Times will be valid if not submitted in accordance with this Paragraph 10.05.

ARTICLE 11 – COST OF THE WORK; ALLOWANCES; UNIT PRICE WORK

11.01 *Cost of the Work*

A. *Costs Included:* The term Cost of the Work means the sum of all costs, except those excluded in Paragraph 11.01.B, necessarily incurred and paid by Contractor in the proper performance of the Work. When the value of any Work covered by a Change Order or when a Claim for an adjustment in Contract Price is determined on the basis of Cost of the Work, the costs to be reimbursed to Contractor will be only those additional or incremental costs required because of the change in the Work or because of the event giving rise to the Claim. Except as otherwise may be agreed to in writing by Owner, such costs shall be in amounts no higher than those prevailing in the locality of the Project, shall not include any of the costs itemized in Paragraph 11.01.B, and shall include only the following items:

1. Payroll costs for employees in the direct employ of Contractor in the performance of the Work under schedules of job classifications agreed upon by Owner and Contractor. Such employees shall include, without limitation, superintendents, foremen, and other personnel employed full time on the Work. Payroll costs for employees not employed full time on the Work shall be apportioned on the basis of their time spent on the Work. Payroll costs shall include, but not be limited to, salaries and wages plus the cost of fringe benefits, which shall include social security contributions, unemployment, excise, and payroll taxes, workers' compensation, health and retirement benefits, bonuses, sick leave, vacation and holiday pay applicable thereto. The expenses of performing Work outside of regular working hours, on Saturday, Sunday, or legal holidays, shall be included in the above to the extent authorized by Owner.

2. Cost of all materials and equipment furnished and incorporated in the Work, including costs of transportation and storage thereof, and Suppliers' field services required in connection therewith. All cash discounts shall accrue to Contractor unless Owner deposits funds with Contractor with which to make payments, in which case the cash discounts shall accrue to Owner. All trade discounts, rebates and refunds and returns from sale of surplus materials and equipment shall accrue to Owner, and Contractor shall make provisions so that they may be obtained.

Copyright © 2007 National Society of Professional Engineers for EJCDC. All rights reserved.

3. Payments made by Contractor to Subcontractors for Work performed by Subcontractors. If required by Owner, Contractor shall obtain competitive bids from subcontractors acceptable to Owner and Contractor and shall deliver such bids to Owner, who will then determine, with the advice of Engineer, which bids, if any, will be acceptable. If any subcontract provides that the Subcontractor is to be paid on the basis of Cost of the Work plus a fee, the Subcontractor's Cost of the Work and fee shall be determined in the same manner as Contractor's Cost of the Work and fee as provided in this Paragraph 11.01.

4. Costs of special consultants (including but not limited to engineers, architects, testing laboratories, surveyors, attorneys, and accountants) employed for services specifically related to the Work.

5. Supplemental costs including the following:

    a. The proportion of necessary transportation, travel, and subsistence expenses of Contractor's employees incurred in discharge of duties connected with the Work.

    b. Cost, including transportation and maintenance, of all materials, supplies, equipment, machinery, appliances, office, and temporary facilities at the Site, and hand tools not owned by the workers, which are consumed in the performance of the Work, and cost, less market value, of such items used but not consumed which remain the property of Contractor.

    c. Rentals of all construction equipment and machinery, and the parts thereof whether rented from Contractor or others in accordance with rental agreements approved by Owner with the advice of Engineer, and the costs of transportation, loading, unloading, assembly, dismantling, and removal thereof. All such costs shall be in accordance with the terms of said rental agreements. The rental of any such equipment, machinery, or parts shall cease when the use thereof is no longer necessary for the Work.

    d. Sales, consumer, use, and other similar taxes related to the Work, and for which Contractor is liable, as imposed by Laws and Regulations.

    e. Deposits lost for causes other than negligence of Contractor, any Subcontractor, or anyone directly or indirectly employed by any of them or for whose acts any of them may be liable, and royalty payments and fees for permits and licenses.

    f. Losses and damages (and related expenses) caused by damage to the Work, not compensated by insurance or otherwise, sustained by Contractor in connection with the performance of the Work (except losses and damages within the deductible amounts of property insurance established in accordance with Paragraph 5.06.D), provided such losses and damages have resulted from causes other than the negligence of Contractor, any Subcontractor, or anyone directly or indirectly employed by any of them or for whose acts any of them may be liable. Such losses shall include settlements made with the written consent and approval of Owner. No such losses, damages, and expenses shall be included in the Cost of the Work for the purpose of determining Contractor's fee.

    g. The cost of utilities, fuel, and sanitary facilities at the Site.

Copyright © 2007 National Society of Professional Engineers for EJCDC. All rights reserved.

h. Minor expenses such as telegrams, long distance telephone calls, telephone service at the Site, express and courier services, and similar petty cash items in connection with the Work.

i. The costs of premiums for all bonds and insurance Contractor is required by the Contract Documents to purchase and maintain.

B. *Costs Excluded:* The term Cost of the Work shall not include any of the following items:

1. Payroll costs and other compensation of Contractor's officers, executives, principals (of partnerships and sole proprietorships), general managers, safety managers, engineers, architects, estimators, attorneys, auditors, accountants, purchasing and contracting agents, expediters, timekeepers, clerks, and other personnel employed by Contractor, whether at the Site or in Contractor's principal or branch office for general administration of the Work and not specifically included in the agreed upon schedule of job classifications referred to in Paragraph 11.01.A.1 or specifically covered by Paragraph 11.01.A.4, all of which are to be considered administrative costs covered by the Contractor's fee.

2. Expenses of Contractor's principal and branch offices other than Contractor's office at the Site.

3. Any part of Contractor's capital expenses, including interest on Contractor's capital employed for the Work and charges against Contractor for delinquent payments.

4. Costs due to the negligence of Contractor, any Subcontractor, or anyone directly or indirectly employed by any of them or for whose acts any of them may be liable, including but not limited to, the correction of defective Work, disposal of materials or equipment wrongly supplied, and making good any damage to property.

5. Other overhead or general expense costs of any kind and the costs of any item not specifically and expressly included in Paragraphs 11.01.A.

C. *Contractor's Fee:* When all the Work is performed on the basis of cost-plus, Contractor's fee shall be determined as set forth in the Agreement. When the value of any Work covered by a Change Order or when a Claim for an adjustment in Contract Price is determined on the basis of Cost of the Work, Contractor's fee shall be determined as set forth in Paragraph 12.01.C.

D. *Documentation:* Whenever the Cost of the Work for any purpose is to be determined pursuant to Paragraphs 11.01.A and 11.01.B, Contractor will establish and maintain records thereof in accordance with generally accepted accounting practices and submit in a form acceptable to Engineer an itemized cost breakdown together with supporting data.

11.02 *Allowances*

A. It is understood that Contractor has included in the Contract Price all allowances so named in the Contract Documents and shall cause the Work so covered to be performed for such sums and by such persons or entities as may be acceptable to Owner and Engineer.

Copyright © 2007 National Society of Professional Engineers for EJCDC. All rights reserved.

B. *Cash Allowances:*

1. Contractor agrees that:

a. the cash allowances include the cost to Contractor (less any applicable trade discounts) of materials and equipment required by the allowances to be delivered at the Site, and all applicable taxes; and

b. Contractor's costs for unloading and handling on the Site, labor, installation, overhead, profit, and other expenses contemplated for the cash allowances have been included in the Contract Price and not in the allowances, and no demand for additional payment on account of any of the foregoing will be valid.

C. *Contingency Allowance:*

1. Contractor agrees that a contingency allowance, if any, is for the sole use of Owner to cover unanticipated costs.

D. Prior to final payment, an appropriate Change Order will be issued as recommended by Engineer to reflect actual amounts due Contractor on account of Work covered by allowances, and the Contract Price shall be correspondingly adjusted.

11.03 *Unit Price Work*

A. Where the Contract Documents provide that all or part of the Work is to be Unit Price Work, initially the Contract Price will be deemed to include for all Unit Price Work an amount equal to the sum of the unit price for each separately identified item of Unit Price Work times the estimated quantity of each item as indicated in the Agreement.

B. The estimated quantities of items of Unit Price Work are not guaranteed and are solely for the purpose of comparison of Bids and determining an initial Contract Price. Determinations of the actual quantities and classifications of Unit Price Work performed by Contractor will be made by Engineer subject to the provisions of Paragraph 9.07.

C. Each unit price will be deemed to include an amount considered by Contractor to be adequate to cover Contractor's overhead and profit for each separately identified item.

D. Owner or Contractor may make a Claim for an adjustment in the Contract Price in accordance with Paragraph 10.05 if:

1. the quantity of any item of Unit Price Work performed by Contractor differs materially and significantly from the estimated quantity of such item indicated in the Agreement; and

2. there is no corresponding adjustment with respect to any other item of Work; and

3. Contractor believes that Contractor is entitled to an increase in Contract Price as a result of having incurred additional expense or Owner believes that Owner is entitled to a decrease in Contract Price and the parties are unable to agree as to the amount of any such increase or decrease.

Copyright © 2007 National Society of Professional Engineers for EJCDC. All rights reserved.

ARTICLE 12 – CHANGE OF CONTRACT PRICE; CHANGE OF CONTRACT TIMES

12.01 *Change of Contract Price*

A. The Contract Price may only be changed by a Change Order. Any Claim for an adjustment in the Contract Price shall be based on written notice submitted by the party making the Claim to the Engineer and the other party to the Contract in accordance with the provisions of Paragraph 10.05. If the Owner decides to extend or shorten the improvement, or otherwise alter it by additions or deductions, including the elimination of any one or more of the items or an increase or decrease in the quantities of any item, by an amount not to exceed twenty-five percent (25%) of the total money value of the original contract price, or contract price corrected as provided in the specifications, he will perform the work as altered, increased or decreased at the applicable contract unit prices subsequently agreed upon.

B. The value of any Work covered by a Change Order or of any Claim for an adjustment in the Contract Price will be determined as follows:

1. where the Work involved is covered by unit prices contained in the Contract Documents, by application of such unit prices to the quantities of the items involved (subject to the provisions of Paragraph 11.03); or

2. where the Work involved is not covered by unit prices contained in the Contract Documents, by a mutually agreed lump sum (which may include an allowance for overhead and profit not necessarily in accordance with Paragraph 12.01.C.2); or

C. *Contractor's Fee:* The Contractor's fee for overhead and profit shall be determined as follows:

1. a mutually acceptable fixed fee; or

2. if a fixed fee is not agreed upon, then a fee based on the following percentages of the various portions of the Cost of the Work:

   a. for costs incurred under Paragraphs 11.01.A.1 and 11.01.A.2, the Contractor's fee shall be 15 percent;

   b. for costs incurred under Paragraph 11.01.A.3, the Contractor's fee shall be five percent;

   c. where one or more tiers of subcontracts are on the basis of Cost of the Work plus a fee and no fixed fee is agreed upon, the intent of Paragraphs 12.01.C.2.a and 12.01.C.2.b is that the Subcontractor who actually performs the Work, at whatever tier, will be paid a fee of 15 percent of the costs incurred by such Subcontractor under Paragraphs 11.01.A.1 and 11.01.A.2 and that any higher tier Subcontractor and Contractor will each be paid a fee of five percent of the amount paid to the next lower tier Subcontractor;

   d. no fee shall be payable on the basis of costs itemized under Paragraphs 11.01.A.4, 11.01.A.5, and 11.01.B;

Copyright © 2007 National Society of Professional Engineers for EJCDC. All rights reserved.

e. the amount of credit to be allowed by Contractor to Owner for any change which results in a net decrease in cost will be the amount of the actual net decrease in cost plus a deduction in Contractor's fee by an amount equal to five percent of such net decrease; and

f. when both additions and credits are involved in any one change, the adjustment in Contractor's fee shall be computed on the basis of the net change in accordance with Paragraphs 12.01.C.2.a through 12.01.C.2.e, inclusive.

12.02 *Change of Contract Times*

A. The Contract Times may only be changed by a Change Order. Any Claim for an adjustment in the Contract Times shall be based on written notice submitted by the party making the Claim to the Engineer and the other party to the Contract in accordance with the provisions of Paragraph 10.05.

B. Any adjustment of the Contract Times covered by a Change Order or any Claim for an adjustment in the Contract Times will be determined in accordance with the provisions of this Article 12.

12.03 *Delays*

A. Where Contractor is prevented from completing any part of the Work within the Contract Times due to delay beyond the control of Contractor, the Contract Times will be extended in an amount equal to the time lost due to such delay if a Claim is made therefor as provided in Paragraph 12.02.A. Delays beyond the control of Contractor shall include, but not be limited to, acts or neglect by Owner, acts or neglect of utility owners or other contractors performing other work as contemplated by Article 7, fires, floods, epidemics, abnormal weather conditions, or acts of God.

B. If Owner, Engineer, or other contractors or utility owners performing other work for Owner as contemplated by Article 7, or anyone for whom Owner is responsible, delays, disrupts, or interferes with the performance or progress of the Work, then Contractor shall be entitled to an equitable adjustment in the Contract Price or the Contract Times, or both. Contractor's entitlement to an adjustment of the Contract Times is conditioned on such adjustment being essential to Contractor's ability to complete the Work within the Contract Times.

C. If Contractor is delayed in the performance or progress of the Work by fire, flood, epidemic, abnormal weather conditions, acts of God, acts or failures to act of utility owners not under the control of Owner, or other causes not the fault of and beyond control of Owner and Contractor, then Contractor shall be entitled to an equitable adjustment in Contract Times, if such adjustment is essential to Contractor's ability to complete the Work within the Contract Times. Such an adjustment shall be Contractor's sole and exclusive remedy for the delays described in this Paragraph 12.03.C.

D. Owner, Engineer, and their officers, directors, members, partners, employees, agents, consultants, or subcontractors shall not be liable to Contractor for any claims, costs, losses, or damages (including but not limited to all fees and charges of engineers, architects, attorneys, and other

Copyright © 2007 National Society of Professional Engineers for EJCDC. All rights reserved.

professionals and all court or arbitration or other dispute resolution costs) sustained by Contractor on or in connection with any other project or anticipated project.

E. Contractor shall not be entitled to an adjustment in Contract Price or Contract Times for delays within the control of Contractor. Delays attributable to and within the control of a Subcontractor or Supplier shall be deemed to be delays within the control of Contractor.

ARTICLE 13 – TESTS AND INSPECTIONS; CORRECTION, REMOVAL OR ACCEPTANCE OF DEFECTIVE WORK

13.01 *Notice of Defects*

A. Prompt notice of all defective Work of which Owner or Engineer has actual knowledge will be given to Contractor. Defective Work may be rejected, corrected, or accepted as provided in this Article 13.

13.02 *Access to Work*

A. Owner, Engineer, their consultants and other representatives and personnel of Owner, independent testing laboratories, and governmental agencies with jurisdictional interests will have access to the Site and the Work at reasonable times for their observation, inspection, and testing. Contractor shall provide them proper and safe conditions for such access and advise them of Contractor's safety procedures and programs so that they may comply therewith as applicable.

13.03 *Tests and Inspections*

A. Contractor shall give Engineer timely notice of readiness of the Work for all required inspections, tests, or approvals and shall cooperate with inspection and testing personnel to facilitate required inspections or tests.

B. Owner shall employ and pay for the services of an independent testing laboratory to perform all inspections, tests, or approvals required by the Contract Documents except:

1. for inspections, tests, or approvals covered by Paragraphs 13.03.C and 13.03.D below;

2. that costs incurred in connection with tests or inspections conducted pursuant to Paragraph 13.04.B shall be paid as provided in Paragraph 13.04.C; and

3. as otherwise specifically provided in the Contract Documents.

C. If Laws or Regulations of any public body having jurisdiction require any Work (or part thereof) specifically to be inspected, tested, or approved by an employee or other representative of such public body, Contractor shall assume full responsibility for arranging and obtaining such inspections, tests, or approvals, pay all costs in connection therewith, and furnish Engineer the required certificates of inspection or approval.

D. Contractor shall be responsible for arranging and obtaining and shall pay all costs in connection with any inspections, tests, or approvals required for Owner's and Engineer's acceptance of materials or equipment to be incorporated in the Work; or acceptance of materials, mix designs,

Copyright © 2007 National Society of Professional Engineers for EJCDC. All rights reserved.

or equipment submitted for approval prior to Contractor's purchase thereof for incorporation in the Work. Such inspections, tests, or approvals shall be performed by organizations acceptable to Owner and Engineer. Contractor shall be responsible for arranging, obtaining, and paying all costs in connection with independent laboratory testing of poured in place concrete, soil compaction and strength, water main disinfection acceptance, and sewer main construction acceptance.

E. If any Work (or the work of others) that is to be inspected, tested, or approved is covered by Contractor without written concurrence of Engineer, Contractor shall, if requested by Engineer, uncover such Work for observation.

F. Uncovering Work as provided in Paragraph 13.03.E shall be at Contractor's expense unless Contractor has given Engineer timely notice of Contractor's intention to cover the same and Engineer has not acted with reasonable promptness in response to such notice.

13.04 *Uncovering Work*

A. If any Work is covered contrary to the written request of Engineer, it must, if requested by Engineer, be uncovered for Engineer's observation and replaced at Contractor's expense.

B. If Engineer considers it necessary or advisable that covered Work be observed by Engineer or inspected or tested by others, Contractor, at Engineer's request, shall uncover, expose, or otherwise make available for observation, inspection, or testing as Engineer may require, that portion of the Work in question, furnishing all necessary labor, material, and equipment.

C. If it is found that the uncovered Work is defective, Contractor shall pay all claims, costs, losses, and damages (including but not limited to all fees and charges of engineers, architects, attorneys, and other professionals and all court or arbitration or other dispute resolution costs) arising out of or relating to such uncovering, exposure, observation, inspection, and testing, and of satisfactory replacement or reconstruction (including but not limited to all costs of repair or replacement of work of others); and Owner shall be entitled to an appropriate decrease in the Contract Price. If the parties are unable to agree as to the amount thereof, Owner may make a Claim therefor as provided in Paragraph 10.05.

D. If the uncovered Work is not found to be defective, Contractor shall be allowed an increase in the Contract Price or an extension of the Contract Times, or both, directly attributable to such uncovering, exposure, observation, inspection, testing, replacement, and reconstruction. If the parties are unable to agree as to the amount or extent thereof, Contractor may make a Claim therefor as provided in Paragraph 10.05.

13.05 *Owner May Stop the Work*

A. If the Work is defective, or Contractor fails to supply sufficient skilled workers or suitable materials or equipment, or fails to perform the Work in such a way that the completed Work will conform to the Contract Documents, Owner may order Contractor to stop the Work, or any portion thereof, until the cause for such order has been eliminated; however, this right of Owner to stop the Work shall not give rise to any duty on the part of Owner to exercise this right for the

Copyright © 2007 National Society of Professional Engineers for EJCDC. All rights reserved.

benefit of Contractor, any Subcontractor, any Supplier, any other individual or entity, or any surety for, or employee or agent of any of them.

13.06 *Correction or Removal of Defective Work*

A. Promptly after receipt of written notice, Contractor shall correct all defective Work, whether or not fabricated, installed, or completed, or, if the Work has been rejected by Engineer, remove it from the Project and replace it with Work that is not defective. Contractor shall pay all claims, costs, losses, and damages (including but not limited to all fees and charges of engineers, architects, attorneys, and other professionals and all court or arbitration or other dispute resolution costs) arising out of or relating to such correction or removal (including but not limited to all costs of repair or replacement of work of others).

B. When correcting defective Work under the terms of this Paragraph 13.06 or Paragraph 13.07, Contractor shall take no action that would void or otherwise impair Owner's special warranty and guarantee, if any, on said Work.

13.07 *Correction Period*

A. If within one year after the date of Substantial Completion (or such longer period of time as may be prescribed by the terms of any applicable special guarantee required by the Contract Documents) or by any specific provision of the Contract Documents, any Work is found to be defective, or if the repair of any damages to the land or areas made available for Contractor's use by Owner or permitted by Laws and Regulations as contemplated in Paragraph 6.11.A is found to be defective, Contractor shall promptly, without cost to Owner and in accordance with Owner's written instructions:

1. repair such defective land or areas; or

2. correct such defective Work; or

3. if the defective Work has been rejected by Owner, remove it from the Project and replace it with Work that is not defective, and

4. satisfactorily correct or repair or remove and replace any damage to other Work, to the work of others or other land or areas resulting therefrom.

B. If Contractor does not promptly comply with the terms of Owner's written instructions, or in an emergency where delay would cause serious risk of loss or damage, Owner may have the defective Work corrected or repaired or may have the rejected Work removed and replaced. All claims, costs, losses, and damages (including but not limited to all fees and charges of engineers, architects, attorneys, and other professionals and all court or arbitration or other dispute resolution costs) arising out of or relating to such correction or repair or such removal and replacement (including but not limited to all costs of repair or replacement of work of others) will be paid by Contractor.

C. Where a particular item of equipment or work is placed in continuous service before substantial completion of all of the Work, the correction period for that item shall start to run on the date it is

Copyright © 2007 National Society of Professional Engineers for EJCDC. All rights reserved.

placed into service, and shall extend for the entire warranty period of all of the Work as established by the Substantial Completion date.

D. Where defective Work (and damage to other Work resulting therefrom) has been corrected or removed and replaced under this Paragraph 13.07, the correction period hereunder with respect to such Work will be extended for an additional period of one year after such correction or removal and replacement has been satisfactorily completed.

E. Contractor's obligations under this Paragraph 13.07 are in addition to any other obligation or warranty. The provisions of this Paragraph 13.07 shall not be construed as a substitute for, or a waiver of, the provisions of any applicable statute of limitation or repose.

13.08 *Acceptance of Defective Work*

A. If, instead of requiring correction or removal and replacement of defective Work, Owner (and, prior to Engineer's recommendation of final payment, Engineer) prefers to accept it, Owner may do so. Contractor shall pay all claims, costs, losses, and damages (including but not limited to all fees and charges of engineers, architects, attorneys, and other professionals and all court or arbitration or other dispute resolution costs) attributable to Owner's evaluation of and determination to accept such defective Work (such costs to be approved by Engineer as to reasonableness) and for the diminished value of the Work to the extent not otherwise paid by Contractor pursuant to this sentence. If any such acceptance occurs prior to Engineer's recommendation of final payment, a Change Order will be issued incorporating the necessary revisions in the Contract Documents with respect to the Work, and Owner shall be entitled to an appropriate decrease in the Contract Price, reflecting the diminished value of Work so accepted. If the parties are unable to agree as to the amount thereof, Owner may make a Claim therefor as provided in Paragraph 10.05. If the acceptance occurs after such recommendation, an appropriate amount will be paid by Contractor to Owner.

13.09 *Owner May Correct Defective Work*

A. If Contractor fails within a reasonable time after written notice from Engineer to correct defective Work, or to remove and replace rejected Work as required by Engineer in accordance with Paragraph 13.06.A, or if Contractor fails to perform the Work in accordance with the Contract Documents, or if Contractor fails to comply with any other provision of the Contract Documents, Owner may, after seven days written notice to Contractor, correct, or remedy any such deficiency.

B. In exercising the rights and remedies under this Paragraph 13.09, Owner shall proceed expeditiously. In connection with such corrective or remedial action, Owner may exclude Contractor from all or part of the Site, take possession of all or part of the Work and suspend Contractor's services related thereto, take possession of Contractor's tools, appliances, construction equipment and machinery at the Site, and incorporate in the Work all materials and equipment stored at the Site or for which Owner has paid Contractor but which are stored elsewhere. Contractor shall allow Owner, Owner's representatives, agents and employees, Owner's other contractors, and Engineer and Engineer's consultants access to the Site to enable Owner to exercise the rights and remedies under this Paragraph.

Copyright © 2007 National Society of Professional Engineers for EJCDC. All rights reserved.

C. All claims, costs, losses, and damages (including but not limited to all fees and charges of engineers, architects, attorneys, and other professionals and all court or arbitration or other dispute resolution costs) incurred or sustained by Owner in exercising the rights and remedies under this Paragraph 13.09 will be charged against Contractor, and a Change Order will be issued incorporating the necessary revisions in the Contract Documents with respect to the Work; and Owner shall be entitled to an appropriate decrease in the Contract Price. If the parties are unable to agree as to the amount of the adjustment, Owner may make a Claim therefor as provided in Paragraph 10.05. Such claims, costs, losses and damages will include but not be limited to all costs of repair, or replacement of work of others destroyed or damaged by correction, removal, or replacement of Contractor's defective Work.

D. Contractor shall not be allowed an extension of the Contract Times because of any delay in the performance of the Work attributable to the exercise by Owner of Owner's rights and remedies under this Paragraph 13.09.

ARTICLE 14 – PAYMENTS TO CONTRACTOR AND COMPLETION

14.01 *Schedule of Values*

A. The Schedule of Values established as provided in Paragraph 2.07.A will serve as the basis for progress payments and will be incorporated into a form of Application for Payment acceptable to Engineer. Progress payments on account of Unit Price Work will be based on the number of units completed.

14.02 *Progress Payments*

A. *Applications for Payments:*

1. At least 20 days before the date established in the Agreement for each progress payment (but not more often than once a month), Contractor shall submit to Engineer for review an Application for Payment filled out and signed by Contractor covering the Work completed as of the date of the Application and accompanied by such supporting documentation as is required by the Contract Documents. If payment is requested on the basis of materials and equipment not incorporated in the Work but delivered and suitably stored at the Site or at another location agreed to in writing, the Application for Payment shall also be accompanied by a bill of sale, invoice, or other documentation warranting that Owner has received the materials and equipment free and clear of all Liens and evidence that the materials and equipment are covered by appropriate property insurance or other arrangements to protect Owner's interest therein, all of which must be satisfactory to Owner.

2. Beginning with the second Application for Payment, each Application shall include an affidavit of Contractor stating that all previous progress payments received on account of the Work have been applied on account to discharge Contractor's legitimate obligations associated with prior Applications for Payment. Partial Lien Waivers fromany/all applicable subcontractors and material providers shall be submitted with each Partial Pay Request after the first request.

Copyright © 2007 National Society of Professional Engineers for EJCDC. All rights reserved.

3. The amount of retainage with respect to progress payments will be as stipulated in the Agreement. No payments will be made that would deplete the retainage, place in escrow any funds that are required for retainage, or invest the retainage for the benefit of the contractor.

4. The Application for Payment form to be used on this Project is EJCDC No. C-620. The Agency must approve all Applications for Payment before payment is made.

B. *Review of Applications:*

1. Engineer will, within 10 days after receipt of each Application for Payment, either indicate in writing a recommendation of payment and present the Application to Owner or return the Application to Contractor indicating in writing Engineer's reasons for refusing to recommend payment. In the latter case, Contractor may make the necessary corrections and resubmit the Application.

2. Engineer's recommendation of any payment requested in an Application for Payment will constitute a representation by Engineer to Owner, based on Engineer's observations of the executed Work as an experienced and qualified design professional, and on Engineer's review of the Application for Payment and the accompanying data and schedules, that to the best of Engineer's knowledge, information and belief:

   a. the Work has progressed to the point indicated;

   b. the quality of the Work is generally in accordance with the Contract Documents (subject to an evaluation of the Work as a functioning whole prior to or upon Substantial Completion, the results of any subsequent tests called for in the Contract Documents, a final determination of quantities and classifications for Unit Price Work under Paragraph 9.07, and any other qualifications stated in the recommendation); and

   c. the conditions precedent to Contractor's being entitled to such payment appear to have been fulfilled in so far as it is Engineer's responsibility to observe the Work.

3. By recommending any such payment Engineer will not thereby be deemed to have represented that:

   a. inspections made to check the quality or the quantity of the Work as it has been performed have been exhaustive, extended to every aspect of the Work in progress, or involved detailed inspections of the Work beyond the responsibilities specifically assigned to Engineer in the Contract Documents; or

   b. there may not be other matters or issues between the parties that might entitle Contractor to be paid additionally by Owner or entitle Owner to withhold payment to Contractor.

4. Neither Engineer's review of Contractor's Work for the purposes of recommending payments nor Engineer's recommendation of any payment, including final payment, will impose responsibility on Engineer:

   a. to supervise, direct, or control the Work, or

Copyright © 2007 National Society of Professional Engineers for EJCDC. All rights reserved.

b. for the means, methods, techniques, sequences, or procedures of construction, or the safety precautions and programs incident thereto, or

c. for Contractor's failure to comply with Laws and Regulations applicable to Contractor's performance of the Work, or

d. to make any examination to ascertain how or for what purposes Contractor has used the moneys paid on account of the Contract Price, or

e. to determine that title to any of the Work, materials, or equipment has passed to Owner free and clear of any Liens.

5. Engineer may refuse to recommend the whole or any part of any payment if, in Engineer's opinion, it would be incorrect to make the representations to Owner stated in Paragraph 14.02.B.2. Engineer may also refuse to recommend any such payment or, because of subsequently discovered evidence or the results of subsequent inspections or tests, revise or revoke any such payment recommendation previously made, to such extent as may be necessary in Engineer's opinion to protect Owner from loss because:

   a. the Work is defective, or completed Work has been damaged, requiring correction or replacement;

   b. the Contract Price has been reduced by Change Orders;

   c. Owner has been required to correct defective Work or complete Work in accordance with Paragraph 13.09; or

   d. Engineer has actual knowledge of the occurrence of any of the events enumerated in Paragraph 15.02.A.

C. *Payment Becomes Due:*

1. The Application for Payment with Engineer's recommendations will be presented to the Owner and Agency for consideration. If both the Owner and Agency find the Application for Payment acceptable, the recommended amount less any reduction under the provisions of Paragraph 14.02.D will become due ten days after the Application for Payment and Transfers the corresponding funds to the Owner, and the Owner will make payment to the Contractor. The total turnaround time from Owner approval to Contractor payment will typically be thirty (30) to forty-five (45) days.

D. *Reduction in Payment:*

1. Owner may refuse to make payment of the full amount recommended by Engineer because:

   a. claims have been made against Owner on account of Contractor's performance or furnishing of the Work;

Copyright © 2007 National Society of Professional Engineers for EJCDC. All rights reserved.

b. Liens have been filed in connection with the Work, except where Contractor has delivered a specific bond satisfactory to Owner to secure the satisfaction and discharge of such Liens;

c. there are other items entitling Owner to a set-off against the amount recommended; or

d. Owner has actual knowledge of the occurrence of any of the events enumerated in Paragraphs 14.02.B.5.a through 14.02.B.5.c or Paragraph 15.02.A.

2. If Owner refuses to make payment of the full amount recommended by Engineer, Owner will give Contractor immediate written notice (with a copy to Engineer) stating the reasons for such action and promptly pay Contractor any amount remaining after deduction of the amount so withheld. Owner shall promptly pay Contractor the amount so withheld, or any adjustment thereto agreed to by Owner and Contractor, when Contractor remedies the reasons for such action.

3. Upon a subsequent determination that Owner's refusal of payment was not justified, the amount wrongfully withheld shall be treated as an amount due as determined by Paragraph 14.02.C.1 and subject to interest as provided in the Agreement.

14.03 *Contractor's Warranty of Title*

A. Contractor warrants and guarantees that title to all Work, materials, and equipment covered by any Application for Payment, whether incorporated in the Project or not, will pass to Owner no later than the time of payment free and clear of all Liens.

14.04 *Substantial Completion*

A. When Contractor considers the entire Work ready for its intended use Contractor shall notify Owner and Engineer in writing that the entire Work is substantially complete (except for items specifically listed by Contractor as incomplete) and request that Engineer issue a certificate of Substantial Completion.

B. Promptly after Contractor's notification, Owner, Contractor, and Engineer shall make an inspection of the Work to determine the status of completion. If Engineer does not consider the Work substantially complete, Engineer will notify Contractor in writing giving the reasons therefor.

C. If Engineer considers the Work substantially complete, Engineer will deliver to Owner a tentative certificate of Substantial Completion which shall fix the date of Substantial Completion. There shall be attached to the certificate a tentative list of items to be completed or corrected before final payment. Owner shall have seven days after receipt of the tentative certificate during which to make written objection to Engineer as to any provisions of the certificate or attached list. If, after considering such objections, Engineer concludes that the Work is not substantially complete, Engineer will, within 14 days after submission of the tentative certificate to Owner, notify Contractor in writing, stating the reasons therefor. If, after consideration of Owner's objections, Engineer considers the Work substantially complete, Engineer will, within said 14 days, execute and deliver to Owner and Contractor a definitive certificate of Substantial

Copyright © 2007 National Society of Professional Engineers for EJCDC. All rights reserved.

Completion (with a revised tentative list of items to be completed or corrected) reflecting such changes from the tentative certificate as Engineer believes justified after consideration of any objections from Owner.

D. At the time of delivery of the tentative certificate of Substantial Completion, Engineer will deliver to Owner and Contractor a written recommendation as to division of responsibilities pending final payment between Owner and Contractor with respect to security, operation, safety, and protection of the Work, maintenance, heat, utilities, insurance, and warranties and guarantees. Unless Owner and Contractor agree otherwise in writing and so inform Engineer in writing prior to Engineer's issuing the definitive certificate of Substantial Completion, Engineer's aforesaid recommendation will be binding on Owner and Contractor until final payment.

E. Owner shall have the right to exclude Contractor from the Site after the date of Substantial Completion subject to allowing Contractor reasonable access to remove its property and complete or correct items on the tentative list.

14.05 *Partial Utilization*

A. Prior to Substantial Completion of all the Work, Owner may use or occupy any substantially completed part of the Work which has specifically been identified in the Contract Documents, or which Owner, Engineer, and Contractor agree constitutes a separately functioning and usable part of the Work that can be used by Owner for its intended purpose without significant interference with Contractor's performance of the remainder of the Work, subject to the following conditions:

1. Owner at any time may request Contractor in writing to permit Owner to use or occupy any such part of the Work which Owner believes to be ready for its intended use and substantially complete. If and when Contractor agrees that such part of the Work is substantially complete, Contractor, Owner, and Engineer will follow the procedures of Paragraph 14.04.A through D for that part of the Work.

2. Contractor at any time may notify Owner and Engineer in writing that Contractor considers any such part of the Work ready for its intended use and substantially complete and request Engineer to issue a certificate of Substantial Completion for that part of the Work.

3. Within a reasonable time after either such request, Owner, Contractor, and Engineer shall make an inspection of that part of the Work to determine its status of completion. If Engineer does not consider that part of the Work to be substantially complete, Engineer will notify Owner and Contractor in writing giving the reasons therefor. If Engineer considers that part of the Work to be substantially complete, the provisions of Paragraph 14.04 will apply with respect to certification of Substantial Completion of that part of the Work and the division of responsibility in respect thereof and access thereto.

4. No use or occupancy or separate operation of part of the Work may occur prior to compliance with the requirements of Paragraph 5.10 regarding property insurance.

Copyright © 2007 National Society of Professional Engineers for EJCDC. All rights reserved.

14.06 *Final Inspection*

A. Upon written notice from Contractor that the entire Work or an agreed portion thereof is complete, Engineer will promptly make a final inspection with Owner and Contractor and will notify Contractor in writing of all particulars in which this inspection reveals that the Work is incomplete or defective. Contractor shall immediately take such measures as are necessary to complete such Work or remedy such deficiencies.

14.07 *Final Payment*

A. *Application for Payment:*

1. After Contractor has, in the opinion of Engineer, satisfactorily completed all corrections identified during the final inspection and has delivered, in accordance with the Contract Documents, all maintenance and operating instructions, schedules, guarantees, bonds, certificates or other evidence of insurance, certificates of inspection, marked-up record documents (as provided in Paragraph 6.12), and other documents, Contractor may make application for final payment following the procedure for progress payments.

2. The final Application for Payment shall be accompanied (except as previously delivered) by:

   a. all documentation called for in the Contract Documents, including but not limited to the evidence of insurance required by Paragraph 5.04.B.6;

   b. consent of the surety, if any, to final payment;

   c. a list of all Claims against Owner that Contractor believes are unsettled; and

   d. complete and legally effective releases or waivers (satisfactory to Owner) of all Lien rights arising out of or Liens filed in connection with the Work.

3. In lieu of the releases or waivers of Liens specified in Paragraph 14.07.A.2 and as approved by Owner, Contractor may furnish receipts or releases in full and an affidavit of Contractor that: (i) the releases and receipts include all labor, services, material, and equipment for which a Lien could be filed; and (ii) all payrolls, material and equipment bills, and other indebtedness connected with the Work for which Owner might in any way be responsible, or which might in any way result in liens or other burdens on Owner's property, have been paid or otherwise satisfied. If any Subcontractor or Supplier fails to furnish such a release or receipt in full, Contractor may furnish a bond or other collateral satisfactory to Owner to indemnify Owner against any Lien.

B. *Engineer's Review of Application and Acceptance:*

1. If, on the basis of Engineer's observation of the Work during construction and final inspection, and Engineer's review of the final Application for Payment and accompanying documentation as required by the Contract Documents, Engineer is satisfied that the Work has been completed and Contractor's other obligations under the Contract Documents have been fulfilled, Engineer will, within ten days after receipt of the final Application for

Copyright © 2007 National Society of Professional Engineers for EJCDC. All rights reserved.

Payment, indicate in writing Engineer's recommendation of payment and present the Application for Payment to Owner for payment. At the same time Engineer will also give written notice to Owner and Contractor that the Work is acceptable subject to the provisions of Paragraph 14.09. Otherwise, Engineer will return the Application for Payment to Contractor, indicating in writing the reasons for refusing to recommend final payment, in which case Contractor shall make the necessary corrections and resubmit the Application for Payment.

C. *Payment Becomes Due:*

1. Thirty days after the presentation to Owner of the Application for Payment and accompanying documentation, the amount recommended by Engineer, less any sum Owner is entitled to set off against Engineer's recommendation, including but not limited to liquidated damages, will become due and will be paid by Owner to Contractor.

14.08 *Final Completion Delayed*

A. If, through no fault of Contractor, final completion of the Work is significantly delayed, and if Engineer so confirms, Owner shall, upon receipt of Contractor's final Application for Payment (for Work fully completed and accepted) and recommendation of Engineer, and without terminating the Contract, make payment of the balance due for that portion of the Work fully completed and accepted. If the remaining balance to be held by Owner for Work not fully completed or corrected is less than the retainage stipulated in the Agreement, and if bonds have been furnished as required in Paragraph 5.01, the written consent of the surety to the payment of the balance due for that portion of the Work fully completed and accepted shall be submitted by Contractor to Engineer with the Application for such payment. Such payment shall be made under the terms and conditions governing final payment, except that it shall not constitute a waiver of Claims.

14.09 *Waiver of Claims*

A. The making and acceptance of final payment will constitute:

1. a waiver of all Claims by Owner against Contractor, except Claims arising from unsettled Liens, from defective Work appearing after final inspection pursuant to Paragraph 14.06, from failure to comply with the Contract Documents or the terms of any special guarantees specified therein, or from Contractor's continuing obligations under the Contract Documents; and

2. a waiver of all Claims by Contractor against Owner other than those previously made in accordance with the requirements herein and expressly acknowledged by Owner in writing as still unsettled.

Copyright © 2007 National Society of Professional Engineers for EJCDC. All rights reserved.

ARTICLE 15 – SUSPENSION OF WORK AND TERMINATION

15.01 *Owner May Suspend Work*

A. At any time and without cause, Owner may suspend the Work or any portion thereof for a period of not more than 90 consecutive days by notice in writing to Contractor and Engineer which will fix the date on which Work will be resumed. Contractor shall resume the Work on the date so fixed. Contractor shall be granted an adjustment in the Contract Price or an extension of the Contract Times, or both, directly attributable to any such suspension if Contractor makes a Claim therefor as provided in Paragraph 10.05.

15.02 *Owner May Terminate for Cause*

A. The occurrence of any one or more of the following events will justify termination for cause:

1. Contractor's persistent failure to perform the Work in accordance with the Contract Documents (including, but not limited to, failure to supply sufficient skilled workers or suitable materials or equipment or failure to adhere to the Progress Schedule established under Paragraph 2.07 as adjusted from time to time pursuant to Paragraph 6.04);

2. Contractor's disregard of Laws or Regulations of any public body having jurisdiction;

3. Contractor's repeated disregard of the authority of Engineer; or

4. Contractor's violation in any substantial way of any provisions of the Contract Documents.

B. If one or more of the events identified in Paragraph 15.02.A occur, Owner may, after giving Contractor (and surety) seven days written notice of its intent to terminate the services of Contractor:

1. exclude Contractor from the Site, and take possession of the Work and of all Contractor's tools, appliances, construction equipment, and machinery at the Site, and use the same to the full extent they could be used by Contractor (without liability to Contractor for trespass or conversion);

2. incorporate in the Work all materials and equipment stored at the Site or for which Owner has paid Contractor but which are stored elsewhere; and

3. complete the Work as Owner may deem expedient.

C. If Owner proceeds as provided in Paragraph 15.02.B, Contractor shall not be entitled to receive any further payment until the Work is completed. If the unpaid balance of the Contract Price exceeds all claims, costs, losses, and damages (including but not limited to all fees and charges of engineers, architects, attorneys, and other professionals and all court or arbitration or other dispute resolution costs) sustained by Owner arising out of or relating to completing the Work, such excess will be paid to Contractor. If such claims, costs, losses, and damages exceed such unpaid balance, Contractor shall pay the difference to Owner. Such claims, costs, losses, and damages incurred by Owner will be reviewed by Engineer as to their reasonableness and, when

Copyright © 2007 National Society of Professional Engineers for EJCDC. All rights reserved.

so approved by Engineer, incorporated in a Change Order. When exercising any rights or remedies under this Paragraph, Owner shall not be required to obtain the lowest price for the Work performed.

D. Notwithstanding Paragraphs 15.02.B and 15.02.C, Contractor's services will not be terminated if Contractor begins within seven days of receipt of notice of intent to terminate to correct its failure to perform and proceeds diligently to cure such failure within no more than 30 days of receipt of said notice.

E. Where Contractor's services have been so terminated by Owner, the termination will not affect any rights or remedies of Owner against Contractor then existing or which may thereafter accrue. Any retention or payment of moneys due Contractor by Owner will not release Contractor from liability.

F. If and to the extent that Contractor has provided a performance bond under the provisions of Paragraph 5.01.A, the termination procedures of that bond shall supersede the provisions of Paragraphs 15.02.B and 15.02.C.

15.03 *Owner May Terminate For Convenience*

A. Upon seven days written notice to Contractor and Engineer, Owner may, without cause and without prejudice to any other right or remedy of Owner, terminate the Contract. In such case, Contractor shall be paid for (without duplication of any items):

1. completed and acceptable Work executed in accordance with the Contract Documents prior to the effective date of termination, including fair and reasonable sums for overhead and profit on such Work;

2. expenses sustained prior to the effective date of termination in performing services and furnishing labor, materials, or equipment as required by the Contract Documents in connection with uncompleted Work, plus fair and reasonable sums for overhead and profit on such expenses;

3. all claims, costs, losses, and damages (including but not limited to all fees and charges of engineers, architects, attorneys, and other professionals and all court or arbitration or other dispute resolution costs) incurred in settlement of terminated contracts with Subcontractors, Suppliers, and others; and

4. reasonable expenses directly attributable to termination.

B. Contractor shall not be paid on account of loss of anticipated profits or revenue or other economic loss arising out of or resulting from such termination.

15.04 *Contractor May Stop Work or Terminate*

A. If, through no act or fault of Contractor, (i) the Work is suspended for more than 90 consecutive days by Owner or under an order of court or other public authority, or (ii) Engineer fails to act on any Application for Payment within 30 days after it is submitted, or (iii) Owner fails for 30 days

Copyright © 2007 National Society of Professional Engineers for EJCDC. All rights reserved.

to pay Contractor any sum finally determined to be due, then Contractor may, upon seven days written notice to Owner and Engineer, and provided Owner or Engineer do not remedy such suspension or failure within that time, terminate the Contract and recover from Owner payment on the same terms as provided in Paragraph 15.03.

B. In lieu of terminating the Contract and without prejudice to any other right or remedy, if Engineer has failed to act on an Application for Payment within 30 days after it is submitted, or Owner has failed for 30 days to pay Contractor any sum finally determined to be due, Contractor may, seven days after written notice to Owner and Engineer, stop the Work until payment is made of all such amounts due Contractor, including interest thereon. The provisions of this Paragraph 15.04 are not intended to preclude Contractor from making a Claim under Paragraph 10.05 for an adjustment in Contract Price or Contract Times or otherwise for expenses or damage directly attributable to Contractor's stopping the Work as permitted by this Paragraph.

ARTICLE 16 – DISPUTE RESOLUTION

16.01 *Methods and Procedures*

A. Either Owner or Contractor may request mediation of any Claim submitted to Engineer for a decision under Paragraph 10.05 before such decision becomes final and binding. The mediation will be governed by the Construction Industry Mediation Rules of the American Arbitration Association in effect as of the Effective Date of the Agreement. The request for mediation shall be submitted in writing to the American Arbitration Association and the other party to the Contract. Timely submission of the request shall stay the effect of Paragraph 10.05.E.

B. Owner and Contractor shall participate in the mediation process in good faith. The process shall be concluded within 60 days of filing of the request. The date of termination of the mediation shall be determined by application of the mediation rules referenced above.

C. If the Claim is not resolved by mediation, Engineer's action under Paragraph 10.05.C or a denial pursuant to Paragraphs 10.05.C.3 or 10.05.D shall become final and binding 30 days after termination of the mediation unless, within that time period, Owner or Contractor:

1. elects in writing to invoke any dispute resolution process provided for in the Supplementary Conditions; or

2. agrees with the other party to submit the Claim to another dispute resolution process; or

3. gives written notice to the other party of the intent to submit the Claim to a court of competent jurisdiction.

ARTICLE 17 – MISCELLANEOUS

17.01 *Giving Notice*

A. Whenever any provision of the Contract Documents requires the giving of written notice, it will be deemed to have been validly given if:

Copyright © 2007 National Society of Professional Engineers for EJCDC. All rights reserved.

1. delivered in person to the individual or to a member of the firm or to an officer of the corporation for whom it is intended; or

2. delivered at or sent by registered or certified mail, postage prepaid, to the last business address known to the giver of the notice.

17.02 *Computation of Times*

A. When any period of time is referred to in the Contract Documents by days, it will be computed to exclude the first and include the last day of such period. If the last day of any such period falls on a Saturday or Sunday or on a day made a legal holiday by the law of the applicable jurisdiction, such day will be omitted from the computation.

17.03 *Cumulative Remedies*

A. The duties and obligations imposed by these General Conditions and the rights and remedies available hereunder to the parties hereto are in addition to, and are not to be construed in any way as a limitation of, any rights and remedies available to any or all of them which are otherwise imposed or available by Laws or Regulations, by special warranty or guarantee, or by other provisions of the Contract Documents. The provisions of this Paragraph will be as effective as if repeated specifically in the Contract Documents in connection with each particular duty, obligation, right, and remedy to which they apply.

17.04 *Survival of Obligations*

A. All representations, indemnifications, warranties, and guarantees made in, required by, or given in accordance with the Contract Documents, as well as all continuing obligations indicated in the Contract Documents, will survive final payment, completion, and acceptance of the Work or termination or completion of the Contract or termination of the services of Contractor.

17.05 *Controlling Law*

A. This Contract is to be governed by the law of the state in which the Project is located.

17.06 *Headings*

A. Article and paragraph headings are inserted for convenience only and do not constitute parts of these General Conditions.

ARTICLE 18 – FEDERAL REQUIREMENTS

18.01 *Agency Not a Party*

A. This Contract is expected to be funded in part with funds provided by agency. Neither Agency, nor any of it departments, entities, or employees is a party to this Contract.

Copyright © 2007 National Society of Professional Engineers for EJCDC. All rights reserved.

18.02 *Contract Approval*

A. Owner and Contractor will furnish Owner's attorney such evidence as required so that Owner's attorney can complete and execute the following "Certificate of Owner's Attorney" (Exhibit GC-A) before Owner submits the executed Contract Documents to Agency for approval.

B. Concurrence by Agency in the award of the Contract is required before the Contract is effective.

18.03 *Conflict of Interest*

A. Contractor may not knowingly contract with a supplier or manufacturer if the individual or entity who prepared the plans and specifications has a corporate or financial affiliation with the supplier or manufacturer. Owner's officers, employees, or agents shall not engage in the award or administration of this Contract if a conflict of interest, real or apparent, would be involved. Such a conflict would arise when: (i) the employee, officer or agent; (ii) any member of their immediate family; (iii) their partner or (iv) an organization that employs, or is about to employ, any of the above, has a financial interest in Contractor. Owner's officers, employees, or agents shall neither solicit nor accept gratuities, favors or anything of monetary value from Contractor or subcontractors.

18.04 *Gratuities*

A. If Owner finds after a notice and hearing that Contractor, or any of Contractor's agents or representatives, offered or gave gratuities (in the form of entertainment, gifts, or otherwise) to any official, employee, or agent of Owner or Agency in an attempt to secure this Contract or favorable treatment in awarding, amending, or making any determinations related to the performance of this Contract, Owner may, by written notice to Contractor, terminate this Contract. Owner may also pursue other rights and remedies that the law or this Contract provides. However, the existence of the facts on which Owner bases such findings shall be an issue and may be reviewed in proceedings under the dispute resolution provisions of this Contract.

B. In the event this Contract is terminated as provided in paragraph 18.04.A, Owner may pursue the same remedies against Contractor as it could pursue in the event of a breach of this Contract by Contractor. As a penalty, in addition to any other damages to which it may be entitled by law, Owner may pursue exemplary damages in an amount (as determined by Owner) which shall not be less than three nor more than ten times the costs Contractor incurs in providing any such gratuities to any such officer or employee.

18.05 *Audit and Access to Records*

A. Owner, Agency, the Comptroller General of the United States, or any of their duly authorized representatives, shall have access to any books, documents, papers, and records of the Engineer which are pertinent to the Agreement, for the purpose of making audits, examinations, excerpts, and transcriptions. Engineer shall maintain all required records for three years after final payment is made and all other pending matters are closed.

Copyright © 2007 National Society of Professional Engineers for EJCDC. All rights reserved.

18.06 *Small, Minority and Women's Businesses*

A. If Contractor intends to let any subcontracts for a portion of the work, Contractor shall take affirmative steps to assure that small, minority and women's businesses are used when possible as sources of supplies, equipment, construction, and services. Affirmative steps shall consist of: (1) including qualified small, minority and women's businesses on solicitation lists; (2) assuring that small, minority and women's businesses are solicited whenever they are potential sources; (3) dividing total requirements when economically feasible, into small tasks or quantities to permit maximum participation of small, minority, and women's businesses; (4) establishing delivery schedules, where the requirements of the work permit, which will encourage participation by small, minority and women's businesses; (5) using the services and assistance of the Small Business Administration and the Minority Business Development Agency of the U.S. Department of Commerce; (6) requiring each party to a subcontract to take the affirmative steps of this section; and (7) Contractor is encouraged to procure goods and services from labor surplus area firms.

18.07 *Anti-Kickback*

A. Contractor shall comply with the Copeland Anti-Kickback Act (18 USC 874 and 40 USC 276c) as supplemented by Department of Labor regulations (29 CFR Part 3, "Contractors and Subcontractors on Public Buildings or Public Works Financed in Whole or in Part by Loans or Grants of the United States"). The Act provides that Contractor or subcontractor shall be prohibited from inducing, by any means, any person employed in the construction, completion, or repair of public facilities, to give up any part of the compensation to which they are otherwise entitled. Owner shall report all suspected or reported violations to Agency.

18.08 *Clean Air and Pollution Control Acts*

A. If this Contract exceeds $100,000, Compliance with all applicable standards, orders, or requirements issued under section 306 of the Clean Air Act (42 U.S.C. 1857(h) and 42 USC 7401et. seq.), section 508 of the Clean Water Act (33 U.S.C. 1368) and Federal Water Pollution Control Act (33 USC 1251 et seq.), Executive Order 11738, and Environmental Protection Agency regulations (40 CFR part 15) is required. Contractor will report violations to the Agency and the Regional Office of the EPA.

18.09 *State Energy Policy*

Copyright © 2007 National Society of Professional Engineers for EJCDC. All rights reserved.

A. Contractor shall comply with the Energy Policy and Conservation Act (P.L. 94-163). Mandatory standards and policies relating to energy efficiency, contained in any applicable State Energy Conservation Plan, shall be utilized.

18.10 *Equal Opportunity Requirements*

A. If this Contract exceeds $10,000, Contractor shall comply with Executive Order 11246, "Equal Employment Opportunity," as amended by Executive Order 11375, "Amending Executive Order 11246 Relating to Equal Employment Opportunity," and as supplemented by regulations at 41 CFR part 60, "Office of Federal Contract Compliance Programs, Equal Employment Opportunity, Department of Labor."

B. Contractor's compliance with Executive Order 11246 shall be based on its implementation of the Equal Opportunity Clause, specific affirmative active obligations required by the Standard Federal Equal Employment Opportunity Construction Contract Specifications, as set forth in 41 CFR Part 60-4 and its efforts to meet the goals established for the geographical area where the Contract is to be performed. The hours of minority and female employment and training must be substantially uniform throughout the length of the Contract, and in each trade, and Contractor shall make a good faith effort to employ minorities and women evenly on each of its projects. The transfer of minority or female employees or trainees from Contractor to Contractor or from project to project for the sole purpose of meeting Contractor's goals shall be a violation of the Contract, the Executive Order, and the regulations in 41 CFR Part 60-4. Compliance with the goals will be measured against the total work hours performed.

C. Contractor shall provide written notification to the Director of the Office of Federal Contract Compliance Programs within 10 working days of award of any construction subcontract in excess of $10,000 at any tier for construction work under the Contract resulting from this solicitation. The notification shall list the name, address, and telephone number of the subcontractor; employer identification number; estimated dollar amount of subcontract; estimated starting and completion dates of the subcontract; and the geographical area in which the Contract is to be performed.

18.11 *Restrictions on Lobbying*

A. Contractor and each subcontractor shall comply with Restrictions on Lobbying (Public Law 101-121, Section 319) as supplemented by applicable Agency regulations. This Law applies to the recipients of contracts and subcontracts that exceed $100,000 at any tier under a Federal loan that exceeds $150,000 or a Federal grant that exceeds $100,000. If applicable, Contractor must complete a certification form on lobbying activities related to a specific Federal loan or grant that is a funding source for this Contract. Each tier certifies to the tier above that it will not and has not used Federal appropriated funds to pay any person or organization for influencing or attempting to influence an officer or employee of any agency, a member of Congress, or an employee of a member of Congress in connection with obtaining any Federal contract, grant, or

Copyright © 2007 National Society of Professional Engineers for EJCDC. All rights reserved.

any other award covered by 31 USC 1352. Each tier shall disclose any lobbying with non-Federal funds that takes place in connection with obtaining any Federal award. Certifications and disclosures are forwarded from tier to tier up to the Owner. Necessary certification and disclosure forms shall be provided by Owner.

18.12 *Environmental Requirements*

A. Wetlands – When disposing of excess, spoil, or other construction materials on public or private property, Contractor shall not fill in or otherwise convert wetlands.

B. Floodplains – When disposing of excess, spoil, or other construction materials on public or private property, Contractor shall not fill in or otherwise convert 100 year floodplain areas delineated on the latest Federal Emergency Management Agency Floodplain Maps, or other appropriate maps, i.e., alluvial soils on NRCS Soil Survey Maps.

C. Historic Preservation – Any excavation by Contractor that uncovers an historical or archaeological artifact shall be immediately reported to Owner and a representative of Agency. Construction shall be temporarily halted pending the notification process and further directions issued by Agency after consultation with the State Historic Preservation Officer (SHPO).

D. Endangered Species – Contractor shall comply with the Endangered Species Act, which provides for the protection of endangered and/or threatened species and critical habitat. Should any evidence of the presence of endangered and/or threatened species or their critical habitat be brought to the attention of Contractor, Contractor will immediately report this evidence to Owner and a representative of Agency. Construction shall be temporarily halted pending the notification process and further directions issued by Agency after consultation with the U.S. Fish and Wildlife Service.

E. Mitigation Measures – If the project had an Environmental Report, Environmental Assessment, or Environmental Impact Statement to meet the requirements of the National Environmental Policy Act, compliance with the mitigation measures, if any, in that document are hereby included as a condition of this contract. {These mitigation measures are as follows: Insert mitigation measures if any.}

ARTICLE 19 – STATE OF ILLINOIS REQUIREMENTS

19.01 *State Prevailing Wage Rate Requirements*

A. The Contractor shall be required to pay a minimum of the State Prevailing Wage Rates for the project area, in accordance with Illinois State Law.

19.02 *Employment of Illinois Workers on Public Works*

A. If at the time this contract is executed, or if during the term of this contract, there is excessive unemployment in Illinois as defined in the employment of Illinois Workers on Public Works Act, 30ILCS 570-0.01 et seq., as two consecutive months of unemployment exceeding 5%, the Contractor agrees to employ Illinois Laborers. An Illinois Laborer is defined as any person who

Copyright © 2007 National Society of Professional Engineers for EJCDC. All rights reserved.

has resided in Illinois for at least thirty (30) days and intends to become or remain an Illinois resident.

19.03 *Substance Abuse Prevention on Public Works Projects Act*

A. The Contractor shall be required to comply with the Substance Abuse Prevention on Public Works Projects Act (Public Act 095-0635; HB 1855). As such, the Contractor may be required to sign the Owner's Substance Abuse Prevention Program Certification.

ARTICLE 20 – OTHER REQUIREMENTS

20.01 *Certified Payroll*

A. Contractor shall submit Certified Payroll to the Owner with each pay request.

Copyright © 2007 National Society of Professional Engineers for EJCDC. All rights reserved.

Intentionally Blank

EJCDC
ENGINEERS JOINT CONTRACT DOCUMENTS COMMITTEE

PERFORMANCE BOND

CONTRACTOR *(name and address)*:

SURETY *(name and address of principal place of business)*:

OWNER *(name and address)*:
Village of Maeystown, 1030 Mill Street, Maeystown, IL 62256

CONSTRUCTION CONTRACT
Effective Date of the Agreement:
Amount:
Description *(name and location)*: Proposed Connection to Fountain Water District

BOND
Bond Number:
Date *(not earlier than the Effective Date of the Agreement of the Construction Contract)*:
Amount:
Modifications to this Bond Form: ☐ None ☐ See Paragraph 16

Surety and Contractor, intending to be legally bound hereby, subject to the terms set forth below, do each cause this Performance Bond to be duly executed by an authorized officer, agent, or representative.

CONTRACTOR AS PRINCIPAL	**SURETY**
_____ *(seal)*	_____ *(seal)*
Contractor's Name and Corporate Seal	Surety's Name and Corporate Seal
By: _____	**By:** _____
Signature	Signature *(attach power of attorney)*
_____	_____
Print Name	Print Name
_____	_____
Title	Title
Attest: _____	**Attest:** _____
Signature	Signature
_____	_____
Title	Title

Notes: (1) Provide supplemental execution by any additional parties, such as joint venturers. (2) Any singular reference to Contractor, Surety, Owner, or other party shall be considered plural where applicable.

Copyright © 2013 National Society of Professional Engineers, American Council of Engineering Companies, and American Society of Civil Engineers. All rights reserved.

1. The Contractor and Surety, jointly and severally, bind themselves, their heirs, executors, administrators, successors, and assigns to the Owner for the performance of the Construction Contract, which is incorporated herein by reference.

2. If the Contractor performs the Construction Contract, the Surety and the Contractor shall have no obligation under this Bond, except when applicable to participate in a conference as provided in Paragraph 3.

3. If there is no Owner Default under the Construction Contract, the Surety's obligation under this Bond shall arise after:

3.1 The Owner first provides notice to the Contractor and the Surety that the Owner is considering declaring a Contractor Default. Such notice shall indicate whether the Owner is requesting a conference among the Owner, Contractor, and Surety to discuss the Contractor's performance. If the Owner does not request a conference, the Surety may, within five (5) business days after receipt of the Owner's notice, request such a conference. If the Surety timely requests a conference, the Owner shall attend. Unless the Owner agrees otherwise, any conference requested under this Paragraph 3.1 shall be held within ten (10) business days of the Surety's receipt of the Owner's notice. If the Owner, the Contractor, and the Surety agree, the Contractor shall be allowed a reasonable time to perform the Construction Contract, but such an agreement shall not waive the Owner's right, if any, subsequently to declare a Contractor Default;

3.2 The Owner declares a Contractor Default, terminates the Construction Contract and notifies the Surety; and

3.3 The Owner has agreed to pay the Balance of the Contract Price in accordance with the terms of the Construction Contract to the Surety or to a contractor selected to perform the Construction Contract.

4. Failure on the part of the Owner to comply with the notice requirement in Paragraph 3.1 shall not constitute a failure to comply with a condition precedent to the Surety's obligations, or release the Surety from its obligations, except to the extent the Surety demonstrates actual prejudice.

5. When the Owner has satisfied the conditions of Paragraph 3, the Surety shall promptly and at the Surety's expense take one of the following actions:

5.1 Arrange for the Contractor, with the consent of the Owner, to perform and complete the Construction Contract;

5.2 Undertake to perform and complete the Construction Contract itself, through its agents or independent contractors;

5.3 Obtain bids or negotiated proposals from qualified contractors acceptable to the Owner for a contract for performance and completion of the Construction Contract, arrange for a contract to be prepared for execution by the Owner and a contractor selected with the Owners concurrence, to be secured with performance and payment bonds executed by a qualified surety equivalent to the bonds issued on the Construction Contract, and pay to the Owner the amount of damages as described in Paragraph 7 in excess of the Balance of the Contract Price incurred by the Owner as a result of the Contractor Default; or

5.4 Waive its right to perform and complete, arrange for completion, or obtain a new contractor, and with reasonable promptness under the circumstances:

5.4.1 After investigation, determine the amount for which it may be liable to the Owner and, as soon as practicable after the amount is determined, make payment to the Owner; or

5.4.2 Deny liability in whole or in part and notify the Owner, citing the reasons for denial.

6. If the Surety does not proceed as provided in Paragraph 5 with reasonable promptness, the Surety shall be deemed to be in default on this Bond seven days after receipt of an additional written notice from the Owner to the Surety demanding that the Surety perform its obligations under this Bond, and the Owner shall be entitled to enforce any remedy available to the Owner. If the Surety proceeds as provided in Paragraph 5.4, and the Owner refuses the payment or the Surety has denied liability, in whole or in part, without further notice the Owner shall be entitled to enforce any remedy available to the Owner.

7. If the Surety elects to act under Paragraph 5.1, 5.2, or 5.3, then the responsibilities of the Surety to the Owner shall not be greater than those of the Contractor under the Construction Contract, and the responsibilities of the Owner to the Surety shall not be greater than those of the Owner under the Construction Contract. Subject to the commitment by the Owner to pay the Balance of the Contract Price, the Surety is obligated, without duplication for:

7.1 the responsibilities of the Contractor for correction of defective work and completion of the Construction Contract;

7.2 additional legal, design professional, and delay costs resulting from the Contractor's Default, and resulting from the actions or failure to act of the Surety under Paragraph 5; and

7.3 liquidated damages, or if no liquidated damages are specified in the Construction Contract, actual damages caused by delayed performance or non-performance of the Contractor.

8. If the Surety elects to act under Paragraph 5.1, 5.3, or 5.4, the Surety's liability is limited to the amount of this Bond.

9. The Surety shall not be liable to the Owner or others for obligations of the Contractor that are unrelated to the Construction Contract, and the Balance of the Contract Price shall not be reduced or set off on account of any such unrelated obligations. No right of action shall accrue on this Bond to any person or entity other than the Owner or its heirs, executors, administrators, successors, and assigns.

Copyright © 2013 National Society of Professional Engineers, American Council of Engineering Companies, and American Society of Civil Engineers. All rights reserved.

10. The Surety hereby waives notice of any change, including changes of time, to the Construction Contract or to related subcontracts, purchase orders, and other obligations.

11. Any proceeding, legal or equitable, under this Bond may be instituted in any court of competent jurisdiction in the location in which the work or part of the work is located and shall be instituted within two years after a declaration of Contractor Default or within two years after the Contractor ceased working or within two years after the Surety refuses or fails to perform its obligations under this Bond, whichever occurs first. If the provisions of this paragraph are void or prohibited by law, the minimum periods of limitations available to sureties as a defense in the jurisdiction of the suit shall be applicable.

12. Notice to the Surety, the Owner, or the Contractor shall be mailed or delivered to the address shown on the page on which their signature appears.

13. When this Bond has been furnished to comply with a statutory or other legal requirement in the location where the construction was to be performed, any provision in this Bond conflicting with said statutory or legal requirement shall be deemed deleted herefrom and provisions conforming to such statutory or other legal requirement shall be deemed incorporated herein. When so furnished, the intent is that this Bond shall be construed as a statutory bond and not as a common law bond.

14. Definitions

14.1 Balance of the Contract Price: The total amount payable by the Owner to the Contractor under the Construction Contract after all proper adjustments have been made including allowance for the Contractor for any amounts received or to be received by the Owner in settlement of insurance or other claims for damages to which the Contractor is entitled, reduced by all valid and proper payments made to or on behalf of the Contractor under the Construction Contract.

14.2 Construction Contract: The agreement between the Owner and Contractor identified on the cover page, including all Contract Documents and changes made to the agreement and the Contract Documents.

14.3 Contractor Default: Failure of the Contractor, which has not been remedied or waived, to perform or otherwise to comply with a material term of the Construction Contract.

14.4 Owner Default: Failure of the Owner, which has not been remedied or waived, to pay the Contractor as required under the Construction Contract or to perform and complete or comply with the other material terms of the Construction Contract.

14.5 Contract Documents: All the documents that comprise the agreement between the Owner and Contractor.

15. If this Bond is issued for an agreement between a contractor and subcontractor, the term Contractor in this Bond shall be deemed to be Subcontractor and the term Owner shall be deemed to be Contractor.

16. Modifications to this Bond are as follows:

Copyright © 2013 National Society of Professional Engineers, American Council of Engineering Companies, and American Society of Civil Engineers. All rights reserved.

Intentionally Blank

PAYMENT BOND

Any singular reference to Contractor, Surety, Owner, or other party shall be considered plural where applicable.

CONTRACTOR (*Name and Address*):

SURETY (*Name, and Address of Principal Place of Business*):

OWNER (*Name and Address*):
Village of Maeystown
1030 Mill Street, Maeystown, IL 62256

CONTRACT
Effective Date of Agreement:
Amount:
Description *(Name and Location)*: Proposed Connection with Fountain Water District

BOND
Bond Number:
Date (*Not earlier than Effective Date of Agreement*):
Amount:
Modifications to this Bond Form:

Surety and Contractor, intending to be legally bound hereby, subject to the terms set forth below, do each cause this Payment Bond to be duly executed by an authorized officer, agent, or representative.

CONTRACTOR AS PRINCIPAL	**SURETY**
_____ (Seal)	_____ (Seal)
Contractor's Name and Corporate Seal	Surety's Name and Corporate Seal
By: _____	By: _____
Signature	Signature (Attach Power of Attorney)
_____	_____
Print Name	Print Name
_____	_____
Title	Title
Attest: _____	Attest: _____
Signature	Signature
_____	_____
Title	Title

Note: Provide execution by additional parties, such as joint venturers, if necessary.

1. Contractor and Surety, jointly and severally, bind themselves, their heirs, executors, administrators, successors, and assigns to Owner to pay for labor, materials, and equipment furnished by Claimants for use in the performance of the Contract, which is incorporated herein by reference.

2. With respect to Owner, this obligation shall be null and void if Contractor:

2.1 Promptly makes payment, directly or indirectly, for all sums due Claimants, and

2.2 Defends, indemnifies, and holds harmless Owner from all claims, demands, liens, or suits alleging non-payment by Contractor by any person or entity who furnished labor, materials, or equipment for use in the performance of the Contract, provided Owner has promptly notified Contractor and Surety (at the addresses described in Paragraph 12) of any claims, demands, liens, or suits and tendered defense of such claims, demands, liens, or suits to Contractor and Surety, and provided there is no Owner Default.

3. With respect to Claimants, this obligation shall be null and void if Contractor promptly makes payment, directly or indirectly, for all sums due.

4. Surety shall have no obligation to Claimants under this Bond until:

4.1 Claimants who are employed by or have a direct contract with Contractor have given notice to Surety (at the address described in Paragraph 12) and sent a copy, or notice thereof, to Owner, stating that a claim is being made under this Bond and, with substantial accuracy, the amount of the claim.

4.2 Claimants who do not have a direct contract with Contractor:

1. Have furnished written notice to Contractor and sent a copy, or notice thereof, to Owner, within 90 days after having last performed labor or last furnished materials or equipment included in the claim stating, with substantial accuracy, the amount of the claim and the name of the party to whom the materials or equipment were furnished or supplied, or for whom the labor was done or performed; and
2. Have either received a rejection in whole or in part from Contractor, or not received within 30 days of furnishing the above notice any communication from Contractor by which Contractor had indicated the claim will be paid directly or indirectly; and
3. Not having been paid within the above 30 days, have sent a written notice to Surety (at the address described in Paragraph 12) and sent a copy, or notice thereof, to Owner, stating that a claim is being made under this Bond and enclosing a copy of the previous written notice furnished to Contractor.

5. If a notice by a Claimant required by Paragraph 4 is provided by Owner to Contractor or to Surety, that is sufficient compliance.

6. Reserved.

7. Surety's total obligation shall not exceed the amount of this Bond, and the amount of this Bond shall be credited for any payments made in good faith by Surety.

8. Amounts owed by Owner to Contractor under the Contract shall be used for the performance of the Contract and to satisfy claims, if any, under any performance bond. By Contractor furnishing and Owner accepting this Bond, they agree that all funds earned by Contractor in the performance of the Contract are dedicated to satisfy obligations of Contractor and Surety under this Bond, subject to Owner's priority to use the funds for the completion of the Work.

9. Surety shall not be liable to Owner, Claimants, or others for obligations of Contractor that are unrelated to the Contract. Owner shall not be liable for payment of any costs or expenses of any Claimant under this Bond, and shall have under this Bond no obligations to make payments to, give notices on behalf of, or otherwise have obligations to Claimants under this Bond.

10. Surety hereby waives notice of any change, including changes of time, to the Contract or to related subcontracts, purchase orders, and other obligations.

11. No suit or action shall be commenced by a Claimant under this Bond other than in a court of competent jurisdiction in the location in which the Work or part of the Work is located or after the expiration of one year from the date (1) on which the Claimant gave the notice required by Paragraph 4.1 or Paragraph 4.2.3, or (2) on which the last labor or service was performed by anyone or the last materials or equipment were furnished by anyone under the Contract, whichever of (1) or (2) first occurs. If the provisions of this paragraph are void or prohibited by law, the minimum period of limitation available to sureties as a defense in the jurisdiction of the suit shall be applicable.

12. Notice to Surety, Owner, or Contractor shall be mailed or delivered to the addresses shown on the signature page. Actual receipt of notice by Surety, Owner, or Contractor, however accomplished, shall be sufficient compliance as of the date received at the address shown on the signature page.

13. When this Bond has been furnished to comply with a statutory requirement in the location where the Contract was to be performed, any provision in this Bond conflicting with said statutory requirement shall be deemed deleted herefrom and provisions conforming to such statutory requirement shall be deemed incorporated herein. The intent is that this Bond shall be construed as a statutory Bond and not as a common law bond.

14. Upon request of any person or entity appearing to be a potential beneficiary of this Bond, Contractor shall promptly furnish a copy of this Bond or shall permit a copy to be made.

15. Definitions

15.1 Claimant: An individual or entity having a direct contract with Contractor, or with a first-tier subcontractor of Contractor, to furnish labor, materials, or equipment for use in the performance of the Contract. The intent of this Bond shall be to include without limitation in the terms "labor, materials or equipment" that part of water, gas, power, light, heat, oil, gasoline, telephone service, or rental equipment used in the Contract, architectural and engineering services required for performance of the Work of Contractor and Contractor's subcontractors, and all other items for which a mechanic's lien may be asserted in the jurisdiction where the labor, materials, or equipment were furnished.

15.2 Contract: The agreement between Owner and Contractor identified on the signature page, including all Contract Documents and changes thereto.

15.3 Owner Default: Failure of Owner, which has neither been remedied nor waived, to pay Contractor as required by the Contract, or to perform and complete or otherwise comply with the other terms thereof.

FOR INFORMATION ONLY – (*Name, Address, and Telephone*)
Surety Agency or Broker:
Owner's Representative (*Engineer or other*):

Intentionally Blank

EJCDC
ENGINEERS JOINT CONTRACT DOCUMENTS COMMITTEE

Contractor's Application for Payment No.

	Application Period:	Application Date:
To (Owner): Village of Maeystown	From (Contractor):	Via (Engineer): Heneghan & Associates, P.C.
Project: Proposed Connection with Fountain Water District	Contract: Village of Maeystown, Proposed Connection with Fountain Water District	
Owner's Contract No.:	Contractor's Project No.:	Engineer's Project No.: Heneghan & Associates, P.C.

Application For Payment

Change Order Summary

Approved Change Orders		
Number	Additions	Deductions
TOTALS		
NET CHANGE BY CHANGE ORDERS		

1. ORIGINAL CONTRACT PRICE	**$**
2. Net change by Change Orders	**$**
3. Current Contract Price (Line 1 ± 2)	**$**
4. TOTAL COMPLETED AND STORED TO DATE (Column F total on Progress Estimates)	**$**
5. RETAINAGE:	
a. X _____ Work Completed	**$**
b. X _____ Stored Material	**$**
c. Total Retainage (Line 5.a + Line 5.b)	**$**
6. AMOUNT ELIGIBLE TO DATE (Line 4 - Line 5.c)	**$**
7. LESS PREVIOUS PAYMENTS (Line 6 from prior Application)	**$**
8. AMOUNT DUE THIS APPLICATION	**$**
9. BALANCE TO FINISH, PLUS RETAINAGE (Column G total on Progress Estimates + Line 5.c above)	**$**

Contractor's Certification

The undersigned Contractor certifies, to the best of its knowledge, the following:
(1) All previous progress payments received from Owner on account of Work done under the Contract have been applied on account to discharge Contractor's legitimate obligations incurred in connection with the Work covered by prior Applications for Payment;
(2) Title to all Work, materials and equipment incorporated in said Work, or otherwise listed in or covered by this Application for Payment, will pass to Owner at time of payment free and clear of all Liens, security interests, and encumbrances (except such as are covered by a bond acceptable to Owner indemnifying Owner against any such Liens, security interest, or encumbrances); and
(3) All the Work covered by this Application for Payment is in accordance with the Contract Documents and is not defective.

Contractor Signature

By:	Date:

Payment of: $ _____
(Line 8 or other - attach explanation of the other amount)

is recommended by: _____ _____
(Engineer) (Date)

Payment of: $ _____
(Line 8 or other - attach explanation of the other amount)

is approved by: _____ _____
(Owner) (Date)

Approved by: _____ _____
Funding or Financing Entity (if applicable) (Date)

© 2013 National Society of Professional Engineers for EJCDC. All rights reserved.

Progress Estimate - Lump Sum Work

Contractor's Application

For (Contract): Village of Maeystown, Proposed Connection with Fountain Water District	Application Number:
Application Period:	Application Date:

			Work Completed		E	F		G
A		B	C	D	Materials Presently Stored (not in C or D)	Total Completed and Stored to Date (C + D + E)	% (F / B)	Balance to Finish (B - F)
Specification Section No.	Description	Scheduled Value ($)	From Previous Application (C+D)	This Period				
	Totals							

© 2013 National Society of Professional Engineers for EJCDC. All rights reserved.

Progress Estimate - Unit Price Work

Contractor's Application

For (Contract): Village of Maeystown, Proposed Connection with Fountain Water District	Application Number:
Application Period:	Application Date:

A					B	C	D	E	F		
Item		Contract Information				Estimated Quantity Installed	Value of Work Installed to Date	Materials Presently Stored (not in C)	Total Completed and Stored to Date (D + E)	% (F / B)	Balance to Finish (B - F)
Bid Item No.	Description	Item Quantity	Units	Unit Price	Total Value of Item ($)						
	Totals										

© 2013 National Society of Professional Engineers for EJCDC. All rights reserved.

Stored Material Summary

Contractor's Application

For (Contract):	Village of Maeystown, Proposed Connection with Fountain Water District	Application Number:
Application Period:		Application Date:

A		B	C		D		E	Subtotal Amount Completed and Stored to Date (D + E)	F		G
					Stored Previously				Incorporated in Work		
Bid Item No.	Supplier Invoice No.	Submittal No. (with Specification Section No.)	Storage Location	Description of Materials or Equipment Stored	Date Placed into Storage (Month/Year)	Amount ($)	Amount Stored this Month ($)		Date (Month/ Year)	Amount ($)	Materials Remaining in Storage ($) (D + E - F)
				Totals							

© 2013 National Society of Professional Engineers for EJCDC. All rights reserved.

FIELD ORDER

PROJECT Proposed Connection with Fountain Water District

FIELD ORDER NO: _____

DATE: _____

CONTRACT: _____

OWNER: Village of Maeystown

OWNER'S PROJECT NO: 40038-403

TO: _____

CONTRACT DATE: _____

This Field Order is issued to interpret/clarify the Contract Documents, order minor changes in the work and/or memorialize trade-off agreements. Both parties hereby agree that the work described by this Field Order is to be accomplished without change in Contract Sum, Contract Time, and/or claims for other costs.

DESCRIPTION:

FIELD REPRESENTATIVE OR PROJECT MANAGER	**CONTRACTOR:**	**FUNDING AGENCY:**
		USDA-RD
BY: _____	BY: _____	BY: _____

oOo

Intentionally Blank

WORK CHANGE DIRECTIVE

No. _____

DATE OF ISSUANCE: _____ EFFECTIVE DATE: _____

OWNER: **Village of Maeystown**

CONTRACTOR: _____

Contract: **Proposed Connection with Fountain Water District**

Project: **Proposed Connection with Fountain Water District**

OWNER's Contract No. _____ ENGINEER's Project No. **40038-403**

You are directed to proceed promptly with the following change(s):
Description:

Purpose of Work Change Directive:

Attachments: (List documents supporting change)

If OWNER or CONTRACTOR believe that the above change has affected Contract Price any Claim for a Change Order based thereon will involve one or more of the following methods as defined in the Contract Documents.
Method of determining change
in Contract Price:

☐ Unit Prices
☐ Lump Sum
☐ Cost of the Work _____

Estimated increase (decrease) in Contract Price:
$ _____
If the change involves an increase, the estimated amount is not to be exceeded without further authorization.

Estimated increase (decrease) in Contract Times:
Substantial Completion _____ days;
Ready for final payment _____ days.

RECOMMENDED:	AUTHORIZED:	ACKNOWLEDGED:
Heneghan & Associates, P.C.	_____	USDA Rural Development
ENGINEER	OWNER	FUNDING AGENCY
By: _____	By: _____	By: _____

WORK CHANGE DIRECTIVE

INSTRUCTIONS

A. GENERAL INFORMATION

This document was developed for use in situations involving changes in the Work which, if not processed expeditiously, might delay the project. These changes are often initiated in the field and may affect the Contract Price or the Contract Times. This is not a Change Order, but only a directive to proceed with Work that may be included in a subsequent Change Order.

For supplemental instructions and minor changes not involving a change in the Contract Price or the Contract Times a Field Order should be used.

B. COMPLETING THE WORK CHANGE DIRECTIVE FORM

Engineer initiates the form, including a description of the items involved and attachments.

Based on conversations between Engineer and Contractor, Engineer completes the following:

> METHOD OF DETERMINING CHANGE, IF ANY IN CONTRACT PRICE: Mark the method to be used in determining the final cost of Work involved and the estimated net effect on the Contract Price. If the change involves an increase in the Contract Price and the estimated amount is approached before the additional or changed Work is completed, another Work Change Directive must be issued to change the estimated price or Contractor may stop the changes Work when the estimated time is reached. If the Work Change Directive is not likely to change the Contract Price, the space for estimated increase (decrease) should be marked “Not Applicable”.

Once Engineer has completed and signed the form, all copies should be sent to Owner for authorization because Engineer alone does not have authority to authorize changes in Price or Times. Once authorized by Owner, a copy should be sent by Engineer to Contractor. Price and Times may only be changed by Change Order signed by Owner and Contractor with Engineer’s recommendation.

Paragraph 10.030A02 of the General Conditions requires that a Change Order be initiated and processed to cover any undisputed sum or amount of time for Work actually performed to this Work Change Directive.

Once the Work covered by this directive is completed or final cost and times are determined, Contractor should submit documentation for inclusion in a Change Order.

THIS IS A DIRECTIVE TO PROCEED WITH A CHANGE THAT MAY AFFECT THE CONTRACT PRICE OR CONTRACT TIMES. A CHANGE ORDER, IF ANY, SHOULD BE CONSIDERED PROMPTLY.

EJCDC
ENGINEERS JOINT CONTRACT DOCUMENTS COMMITTEE

Change Order No. _____

Date of Issuance:		Effective Date:	
Owner:	Village of Maeystown	Owner's Contract No.:	
Contractor:		Contractor's Project No.:	
Engineer:	Heneghan & Associates, P.C.	Engineer's Project No.:	40038-403
Project:	Proposed Connection with Fountain Water District	Contract Name:	

The Contract is modified as follows upon execution of this Change Order:

Description:

Attachments: *[List documents supporting change]*

CHANGE IN CONTRACT PRICE	**CHANGE IN CONTRACT TIMES** *[note changes in Milestones if applicable]*
Original Contract Price: $_____	Original Contract Times: Substantial Completion: _____ Ready for Final Payment: _____ days or dates
[Increase] [Decrease] from previously approved Change Orders No. ___ to No. ___: $_____	[Increase] [Decrease] from previously approved Change Orders No. ___ to No. ___: Substantial Completion: _____ Ready for Final Payment: _____ days
Contract Price prior to this Change Order: $_____	Contract Times prior to this Change Order: Substantial Completion: _____ Ready for Final Payment: _____ days or dates
[Increase] [Decrease] of this Change Order: $_____	[Increase] [Decrease] of this Change Order: Substantial Completion: _____ Ready for Final Payment: _____ days or dates
Contract Price incorporating this Change Order: $_____	Contract Times with all approved Change Orders: Substantial Completion: _____ Ready for Final Payment: _____ days or dates

RECOMMENDED:	ACCEPTED:	ACCEPTED:
By: _____	By: _____	By: _____
Engineer (if required)	Owner (Authorized Signature)	Contractor (Authorized Signature)
Title: _____	Title _____	Title _____
Date: _____	Date _____	Date _____

Approved by Funding Agency (if applicable)

By: _____ Date:

Title: _____

Intentionally Blank

EJCDC
ENGINEERS JOINT CONTRACT DOCUMENTS COMMITTEE

NOTICE TO PROCEED

Owner:	Village of Maeystown	Owner's Contract No.:	
Contractor:		Contractor's Project No.:	
Engineer:	Heneghan & Associates, P.C.	Engineer's Project No.:	40038-403
Project:	Proposed Connection with Fountain Water District	Contract Name:	
		Effective Date of Contract:	

TO CONTRACTOR:

Owner hereby notifies Contractor that the Contract Times under the above Contract will commence to run on [_____, 20__]. *[see Paragraph 4.01 of the General Conditions]*

On that date, Contractor shall start performing its obligations under the Contract Documents. No Work shall be done at the Site prior to such date. In accordance with the Agreement, [the date of Substantial Completion is _____, and the date of readiness for final payment is_____] ***or*** [the number of days to achieve Substantial Completion is _____, and the number of days to achieve readiness for final payment is _____].

Before starting any Work at the Site, Contractor must comply with the following:
[Note any access limitations, security procedures, or other restrictions]

Owner**:**

Authorized Signature

By:

Title:

Date Issued:

Copy: Engineer

Intentionally Blank

EJCDC
ENGINEERS JOINT CONTRACT DOCUMENTS COMMITTEE

CERTIFICATE OF SUBSTANTIAL COMPLETION

Owner:	Village of Maeystown	Owner's Contract No.:	
Contractor:		Contractor's Project No.:	
Engineer:	Heneghan & Associates, P.C.	Engineer's Project No.:	40038-403
Project:	Proposed Connection with Fountain Water District	Contract Name:	

This [preliminary] [final] Certificate of Substantial Completion applies to:

☐ All Work ☐ The following specified portions of the Work:

Date of Substantial Completion

The Work to which this Certificate applies has been inspected by authorized representatives of Owner, Contractor, and Engineer, and found to be substantially complete. The Date of Substantial Completion of the Work or portion thereof designated above is hereby established, subject to the provisions of the Contract pertaining to Substantial Completion. The date of Substantial Completion in the final Certificate of Substantial Completion marks the commencement of the contractual correction period and applicable warranties required by the Contract.

A punch list of items to be completed or corrected is attached to this Certificate. This list may not be all-inclusive, and the failure to include any items on such list does not alter the responsibility of the Contractor to complete all Work in accordance with the Contract.

The responsibilities between Owner and Contractor for security, operation, safety, maintenance, heat, utilities, insurance, and warranties upon Owner's use or occupancy of the Work shall be as provided in the Contract, except as amended as follows: *[Note: Amendments of contractual responsibilities recorded in this Certificate should be the product of mutual agreement of Owner and Contractor; see Paragraph 15.03.D of the General Conditions.]*

Amendments to Owner's responsibilities: ☐ None ☐ As follows

Amendments to Contractor's responsibilities: ☐ None ☐ As follows:

The following documents are attached to and made a part of this Certificate: *[punch list; others]*

This Certificate does not constitute an acceptance of Work not in accordance with the Contract Documents, nor is it a release of Contractor's obligation to complete the Work in accordance with the Contract.

EXECUTED BY ENGINEER:	RECEIVED:	RECEIVED:
By: _____ (Authorized signature)	By: _____ Owner (Authorized Signature)	By: _____ Contractor (Authorized Signature)
Title: _____	Title: _____	Title: _____
Date: _____	Date: _____	Date: _____

Intentionally Blank

General Decision Number: IL160017 11/11/2016 IL17

Superseded General Decision Number: IL20150017

State: Illinois

Construction Types: Heavy and Highway

Counties: Bond, Calhoun, Clinton, Greene, Jersey, Macoupin, Madison, Monroe, Montgomery, St Clair and Washington Counties in Illinois.

MACOUPIN (upper 1/2) & MONTGOMERY (upper 1/2, INCLUDING WAGGONER, STANDARD CITY, & NORTH THEREOF) COUNTIES:

HEAVY CONSTRUCTION PROJECTS (including Sewer & Water Line Construction & Drainage Projects) & HIGHWAY CONSTRUCTION PROJECTS (excluding tunnels, building structures in rest area projects, and railroad construction; bascule, suspension & spandrel arch bridges; bridges designed for commercial navigation; bridges involving marine construction, other major bridges).

Note: Under Executive Order (EO) 13658, an hourly minimum wage of $10.15 for calendar year 2016 applies to all contracts subject to the Davis-Bacon Act for which the solicitation was issued on or after January 1, 2015. If this contract is covered by the EO, the contractor must pay all workers in any classification listed on this wage determination at least $10.15 (or the applicable wage rate listed on this wage determination, if it is higher) for all hours spent performing on the contract in calendar year 2016. The EO minimum wage rate will be adjusted annually. Additional information on contractor requirements and worker protections under the EO is available at www.dol.gov/whd/govcontracts.

IL 160017 - CARPENTER, ELECTRICIAN, OPERATOR, LABOR, CEMENT MASON, TEAMSTER

SEE IL 160001 FOR OTHER TRADES

Modification Number	Publication Date
0	01/08/2016
1	01/15/2016
2	01/22/2016
3	02/05/2016
4	02/19/2016
5	04/22/2016
6	05/06/2016
7	05/13/2016
8	06/17/2016
9	08/05/2016
10	08/19/2016
11	09/30/2016
12	11/11/2016

CARP0270-015 05/01/2012

MACOUPIN (Southern Half) AND MONTGOMERY (Southern Half) COUNTIES

	Rates	Fringes
CARPENTER	$ 29.45	21.40
PILEDRIVERMAN	$ 30.45	21.40

CARP0270-023 05/01/2012

GREENE COUNTY (Except S. of Apple Creek)

	Rates	Fringes
CARPENTER	$ 28.87	21.78
PILEDRIVERMAN	$ 29.87	21.78

* CARP0500-001 05/01/2016

CLINTON, MONROE, and WASHINGTON COUNTIES

	Rates	Fringes
Carpenter & Piledrivermen.....	$ 36.98	16.10

* CARP0500-003 05/01/2016

ST. CLAIR COUNTY

	Rates	Fringes
Carpenter and Piledriver.....	$ 36.98	16.10

CARP0664-001 05/04/2014

GREENE COUNTY (South of Apple Creek)

	Rates	Fringes
Carpenter, Lather, Soft Floor Layer.....	$ 35.67	15.05

* CARP0664-003 05/01/2016

MADISON COUNTY

	Rates	Fringes
Carpenter and Piledriver.....	$ 36.98	16.10

* CARP0664-006 05/01/2016

BOND, CALHOUN, and JERSEY COUNTIES

	Rates	Fringes
CARPENTER.....	$ 36.98	16.10

ELEC0146-012 06/01/2016

MONTGGOMERY COUNTY (East of Butler Grove, Grisham, Hillsboro & Raymond Twps)

	Rates	Fringes
ELECTRICIAN.....	$ 36.27	16.36

ELEC0193-003 06/01/2016

MACOUPIN (Barr, Girard, Nilwood, North & South Otter, North & South Palmyra aand Virden Twps), AND MONTGOMERY (Bois D' Arc, Harvel and Pitman Twps) COUNTIES

	Rates	Fringes
ELECTRICIAN.....	$ 35.44	16.59

ELEC0193-011 04/06/2016

MACOUPIN (Townships of Scottville, North Palmyra, North Otter, Virden, Girard, Barr, South Palmyra, South Otter, and Nilwood) and MONTGOMERY (Townships of Bois D'Arc, Pitman, and Harvel) COUNTIES

	Rates	Fringes
Line Construction		
Groundman - Equipment		

Operator (Class I, all crawler type equipment larger than D-4, 15 ton crane or larger)	$ 43.72	18.15
Groundman - Truck Driver (with winch, may operate diggers, 5th wheel type trucks, crawler-type equipment, D-4 and smaller, backhoe 3/4 yard and under, rubber tire and crawler w/end loader, and may drive bucket truck and live boom type line trucks)	$ 33.37	15.09
Groundman - Truck Driver (without winch)	$ 31.47	14.53
Groundman (Class A)	$ 29.99	14.09
Lineman & Substation Tech	$ 48.56	19.57

ELEC0309-002 12/01/2014

BOND (Westside), CLINTON, GREENE (ALL WORK PERFORMED ON THE ILLINOIS POWER COMPANY PROPERTY), JERSEY (ALL WORK PERFORMED ON THE ILLINOIS POWER COMPANY PROPERTY), MACOUPIN (EXCEPT North 1/3 & Southwest Corner), MADISON (EXCEPT East ALTON, ALTON, WOOD RIVER & HARTFORD), MONROE, MONTGOMERY (East of ROUNDTREE, IRVING & East FORK TWP.), RANDOLPH (PORTION OF RED BUD TOWNSHIP), ST. CLAIR, and WASHINGTON (OKAWVILLE & VENEDY TWPS.) COUNTIES

	Rates	Fringes
LINE CONSTRUCTION		
Cable Splicer; Lineman Welder	$ 43.86	20.70
Groundman Equipment Operator	$ 39.67	18.46
Groundman Truck Driver	$ 32.38	15.06
Groundman	$ 29.62	13.79
Lineman	$ 45.61	21.19

ELEC0309-003 09/05/2016

BOND (Western Half), CLINTON (EXCLUDES HUEY, HOFFMAN, & VIC.), MACOUPIN (EXCLUDES BRIGHTON TWP., ATHENVILLE, SCOTTVILLE, GIRARD & AREA N. THEREOF), MADISON (EXCLUDES ALTON, E. ALTON, HARTFORD & WOOD RIVER), MONROE, MONTGOMERY (WEST OF BUTLER GROVE, GRISHAM, HILLSBOROUGH & RAYMOND TWPS), ST. CLAIR and WASHINGTON (VENEDY TWP) COUNTIES

	Rates	Fringes
ELECTRICIAN	$ 39.16	20.09

ELEC0649-002 01/04/2016

CALHOUN, GREENE, JERSEY, MACOUPIN (SOUTHWEST CORNER), AND MADISON (E. ALTON, ALTON, WOOD RIVER & HARTFORD) COUNTIES

	Rates	Fringes
Line Construction		
EQUIPMENT OPERATOR	$ 41.80	18.62
GROUNDMAN - TRUCK DRIVER W/WINCH	$ 31.53	15.65
GROUNDMAN - TRUCK DRIVER WO/WINCH	$ 27.99	14.62
GROUNDMAN	$ 27.30	14.41
LINEMAN; BLASTER; AND LINEMAN HOLE BORING		

MACHINE OPERATOR.....	$ 48.57	20.58

ELEC0649-008 01/04/2016

CALHOUN, GREEN, JERSEY, MACOUPIN (SOUTHWEST CORNER), AND MADISON (ALTON, E. ALTON, HARTFORD & WOOD RIVER) COUNTIES

	Rates	Fringes
ELECTRICIAN.....	$ 40.10	21.05

* ELEC0702-006 06/27/2016

BOND (Eastern Half), and WASHINGTON (OKAWVILLE & VENDY TWPS) COUNTIES

	Rates	Fringes
Line Construction		
Groundman - Class A.....	$ 29.67	6.40 + 29%
Groundman - Equipment Operator Class II (all other equipment).....	$ 36.01	6.40 + 29%
Heavy - Equipment Operator Class I (all crawler type equipment D-4 and larger)...	$ 40.32	6.40 + 29%
Lineman.....	$ 50.52	6.40 + 29%

ELEC0702-017 01/01/2016

BOND (Eastern Half), CLINTON (Huey, Hoffman, & Vicinity), AND WASHINGTON (Except Venedy TWP) COUNTIES

	Rates	Fringes
ELECTRICIAN.....	$ 41.58	19.49

ENGI0520-005 08/01/2016

	Rates	Fringes
POWER EQUIPMENT OPERATOR		
Group 1.....	$ 36.85	30.70
Group 2.....	$ 35.72	30.70
Group 3.....	$ 31.24	30.70
Group 4.....	$ 31.30	30.70
Group 5.....	$ 30.97	30.70
Group 6.....	$ 39.40	30.70
Group 7.....	$ 39.70	30.70

GROUP 1: CRANES; DRAGLINES; SHOVELS; SKIMMER SCOOPS; CLAMSHELLS OR DERRICK BOATS; PILEDRIVERS; CRANE-TYPE BACKHOES; ASPHALT PLANT OPER; CONCRETE PLANT OPERATOR; DREDGES; ASPHALT SPREADING MACHINES; LOCOMOTIVES; CABLEWAYS OR TOWER MACHINES; HOISTS; HYDRAULIC BACKHOES; DITCHING MACHINES OR BACKFILLER; CHERRY PICKERS; OVERHEAD CRANE; ROLLER; CONCRETE PAVER; CONCRETE BREAKERS & PUMPS; BULK CEMENT PLANTS; CEMENT PUMPS; DERRICK TYPE DRILLS; BOAT OPERATORS; MOTOR GRADERS OR PUSHCATS; SCOOPS OR TOURNAPULLS; BULLDOZERS; ENDLOADERS OR FORKLIFTS; POWER BLADE OR ELEVATING GRADERS; WINCH CATS; BOOM OR WINCH TRUCKS OR BOOM TRACTORS, PIPEWRAPPING OR PAINTING MACHINES; DRILLS (OTHER THAN DERRICK TYPE); MUD JACKS; WELL DRILLING MACHINES; MIXERS; CONVEYORS (TWO); AIR COMPRESSORS TWO; WATER PUMPS REGARDLESS OF SIZE; WELDING MACHINES TWO; SIPHONS OR JETS TWO; WINCH HEADS OR APPARATUS TWO; LIGHT PLANTS TWO; TRACTORS REGARDLESS OF SIZE STRAIGHT (TRACTOR ONLY); FIREMEN ON STATIONARY BOILERS; AUTOMATIC ELEVATORS; FORM GRADING MACHINES; FINISHING MACHINES; POWER SUB GRADER OR RIBBON MACHINE; LONGITUDINAL FLOATS; DISTRIBUTION

OPERATOR ON TRUCKS; WINCH HEADS OR APPARATUSES (1); EXCAVATORS; MOBILE TRACK AIR AND HEATER (TWO TO FIVE); HEAVY EQUIPMENT GREASER AND ALL OTHER OPERATORS NOT LISTED BELOW.

GROUP 2: AIR COMPRESSOR ONE; WATER PUMP REGARDLESS OF SIZE ONE; WELDING MACHINE ONE; 1-BAG MIXER ONE; CONVEYOR ONE; SIPHON OR JET; LIGHT PLANT ONE; HEATER ONE; IMMOBILE TRACK AIR ONE.

GROUP 3: FIREMEN ON WHIRLIES AND ASPHALT SPREADER OILERS; HEAVY EQUIPMENT OILERS; TRUCK CRANES; MONIGANS; LARGE (OVER 65 TON RATE CAPACITY); CONCRETE PLANT OILER AND BLACK TOP PLANT OILER.

GROUP 4: OILERS

GROUP 5: OPERATORS ON EQUIPMENT WITH BOOMS, INCLUDING JIBS, ONE HUNDRED FEET AND OVER; AND LESS THAN 150 FEET.

GROUP 6: OPERATORS ON EQUIPMENT WITH BOOMS, INCLUDING JIBS, 150 FEET AND OVER, AND LESS THAN 200 FEET.

GROUP 7: OPERATORS ON EQUIPMENT WITH BOOMS, INCLUDING JIBS, 200 FEET AND OVER; TOWER CRANES AND WHIRLEY CRANES.

IRON0046-006 08/01/2015

GREENE (NORTHERN HALF), MACOUPIN (NORTH OF SUMMERVILLE), AND MONTGOMERY (NORTH OF LITCHFIELD & HILLSBORO) COUNTIES

	Rates	Fringes
IRONWORKER	$ 31.42	23.19

IRON0392-003 08/01/2015

BOND, CALHOUN, CLINTON, GREENE (SOUTHERN HALF), JERSEY, MACOUPIN (SUMMERVILLE & SOUTH THEREOF), MADISON, MONROE, MONTGOMERY (LITCHFIELD, HILLSBORO, & SOUTH THEREOF), ST. CLAIR, and WASHINGTON COUNTIES

	Rates	Fringes
IRONWORKER	$ 31.50	24.63

IRON0396-006 01/02/2012

BRIDGES, LOCKS, and DAMS ON THE MISSISSIPPI RIVER

	Rates	Fringes
IRONWORKER	$ 31.98	19.11

LABO0044-001 08/01/2015

MADISON COUNTY (Southwest)

	Rates	Fringes
LABORER		
Group 1	$ 25.36	25.19
Group 2	$ 25.86	25.19
Group 3	$ 26.86	25.19

LABORER CLASSIFICATIONS:

GROUP 1 - All classifications not listed below

GROUP 2 - Asbestos Abatement Worker and Hazardous Waste

Worker; Lead Base Paint Worker

GROUP 3 - Dynamite Man

LABO0044-002 08/01/2015

MADISON COUNTY (GLEN CARBON)

	Rates	Fringes
LABORER		
GROUP 1	$ 25.36	25.19
GROUP 2	$ 25.86	25.19
GROUP 3	$ 26.86	25.19

LABORERS CLASSIFICATIONS

GROUP 1 - General Laborers.

GROUP 2 - Brick Mason and Plasterer Tenders.

GROUP 3 - Dynamite and Powder Men.

LABO0100-001 07/02/2014

ST CLAIR COUNTY (East St. Louis,Alcoa, Brooklyn,Cahokia, Caseyville,Centreville, Dupo, Fairmont City, French Village, Midway, Maplewood, National City)

	Rates	Fringes
LABORERS		
Group 1	$ 29.90	19.30
Group 2	$ 30.40	19.30
Group 3	$ 31.40	19.30

LABORER CLASSIFICATIONS:

GROUP 1 - All classifications not listed below

GROUP 2 - Asbestos Abatement Worker and Hazardous Waste Worker; Lead Base Paint Worker, Hod Carrier

GROUP 3 - Dynamite Man

LABO0196-001 08/01/2015

MONROE COUNTY

	Rates	Fringes
LABORERS		
Group 1	$ 27.43	23.12
Group 2	$ 27.93	23.12

LABORER CLASSIFICATIONS:

GROUP 1 - All classifications not listed below

GROUP 2 - Asbestos Abatement Worker and Hazardous Waste Worker; Lead Base Paint Worker; Dynamite Man

---

LABO0218-001 08/01/2015

BOND (Greeneville), CALHOUN (Hardin), GREENE (Roadhouse), JERSEY (Jerseyville), and MADISON (Alton) COUNTIES

	Rates	Fringes
LABORERS		
Group 1	$ 30.54	20.01
Group 2	$ 31.04	20.01
Group 3	$ 32.04	20.01

LABORER CLASSIFICATIONS:

GROUP 1 - All classifications not listed below

GROUP 2 - Asbestos Abatement Worker and Hazardous Waste Worker; Lead Base Paint Worker

GROUP 3 - Dynamite Man

LABO0218-004 08/01/2015

JERSEY COUNTY (Jerseyville)

	Rates	Fringes
LABORER		
GROUP 1	$ 30.54	20.01
GROUP 2	$ 31.04	20.01
GROUP 3	$ 32.04	20.01

LABORER CLASSIFICATIONS

GROUP 1 - General Laborers.

GROUP 2 - Brick Mason and Plasterer Tenders.

GROUP 3 - Dynamite and Powder Men.

LABO0218-005 08/01/2015

GREENE COUNTY (Roadhouse)

	Rates	Fringes
LABORER		
GROUP 1	$ 30.54	20.01
GROUP 2	$ 31.04	20.01
GROUP 3	$ 32.04	20.01

LABORER CLASSFICATIONS

GROUP 1 - General Laborers.

GROUP 2 - Brick Mason and Plasterer Tenders.

GROUP 3 - Dynamite and Powder Men.

LABO0218-006 08/01/2015

CALHOUN COUNTY (Hardin)

	Rates	Fringes
LABORER		
GROUP 1	$ 30.54	20.01
GROUP 2	$ 31.04	20.01
GROUP 3	$ 32.04	20.01

LABORERS CLASSIFICATIONS

GROUP 1 - General Laborers.

GROUP 2 - Brick Mason and Plasterer Tenders.

GROUP 3 - Dynamite and Powder Men.

LABO0338-002 08/01/2015

MADISON COUNTY (Wood River)

	Rates	Fringes
LABORERS		
Group 1	$ 30.08	20.47
Group 2	$ 30.58	20.47
Group 3	$ 31.58	20.47

LABORER CLASSIFICATIONS:

GROUP 1 - All classifications not listed below

GROUP 2 - Asbestos Abatement Worker and Hazardous Waste Worker; Lead Base Paint Worker

GROUP 3 - Dynamite Man

LABO0397-001 08/01/2014

MADISON COUNTY (Southeast)

	Rates	Fringes
LABORERS		
Group 1	$ 29.90	19.30
Group 2	$ 30.40	19.30
Group 3	$ 31.40	19.30

LABORER CLASSIFICATIONS:

GROUP 1 - All classifications not listed below

GROUP 2 - Asbestos Abatement Worker and Hazardous Waste Worker; Lead Base Paint Worker

GROUP 3 - Dynamite Man

LABO0397-002 08/01/2014

MADISON COUNTY (GRANITE CITY and Vicinity)

	Rates	Fringes
LABORERS		
Group 1	$ 29.90	19.30
Group 2	$ 30.40	19.30
Group 3	$ 31.40	19.30

LABORER CLASSIFICATIONS:

GROUP 1 - All classifications not listed below

GROUP 2 - Asbestos Abatement Worker and Hazardous Waste Worker; Lead Base Paint Worker

GROUP 3 - Dynamite Man

LABO0397-003 08/01/2014

MADISON COUNTY (Edwardsville, Marine, and Livingston)

	Rates	Fringes

LABORER		
GROUP 1	$ 29.90	19.30
GROUP 2	$ 30.40	19.30
GROUP 3	$ 30.80	17.45

LABOREER CLASSIFICATIONS

GROUP 1 - General Laborers.

GROUP 3 - Brick Mason and Plasterer Tenders.

GROUP 4 - Dynamite and Powder Men.

LABO0459-001 08/01/2015

ST. CLAIR COUNTY (South)

	Rates	Fringes
LABORERS		
Group 1	$ 28.21	22.34
Group 2	$ 28.71	22.34
Group 3	$ 29.71	22.34

LABORER CLASSIFICATIONS:

GROUP 1 - All classifications not listed below

GROUP 2 - Asbestos Abatement Worker and Hazardous Waste Worker; Lead Base Paint Worker

GROUP 3 - Dynamite Man

LABO0459-004 08/01/2015

ST. CLAIR COUNTY (Belleville)

	Rates	Fringes
Hod Carrier	$ 28.71	22.34

LABO0581-002 08/01/2015

CLINTON COUNTY (Carlyle)

	Rates	Fringes
LABORERS		
Group 1	$ 26.37	24.18
Group 2	$ 26.87	24.18

LABORER CLASSIFICATIONS:

GROUP 1 - All classifications not listed below

GROUP 2 - Asbestos Abatement Worker and Hazardous Waste Worker; Lead Base Paint Worker; Dynamite Man

---

LABO0622-002 08/01/2015

BOND COUNTY (Greenville)

	Rates	Fringes
LABORERS		
Group 1	$ 26.40	24.15
Group 2	$ 26.90	24.15
Group 3	$ 27.90	24.15

LABORER CLASSIFICATIONS:

GROUP 1 - All classifications not listed below

GROUP 2 - Asbestos Abatement Worker and Hazardous Waste Worker; Lead Base Paint Worker

GROUP 3 - Dynamite Man

LABO0622-003 08/01/2015

BOND COUNTY (Except the Northside)

	Rates	Fringes
LABORERS		
GROUP 1	$ 26.40	24.15
GROUP 2	$ 26.90	24.15
GROUP 3	$ 27.90	24.15

LABORER CLASSIFICATIONS

GROUP 1 - All classifications not listed below

GROUP 2 - Asbestos Abatement Worker and Hazardous Waste Worker; Lead Base Paint Worker

GROUP 3 - Dynamite Man

LABO0670-001 07/02/2014

ST CLAIR (O'Fallon, Scott Air Force Base, Shiloh, Lebanon & Vincinity), CLINTON (Trenton & Vicinity), and MADISON (Troy) COUNTIES

	Rates	Fringes
LABORERS		
Group 1	$ 28.00	21.20
Group 2	$ 28.50	21.20
Group 3	$ 29.50	21.20

LABORER CLASSIFICATIONS:

GROUP 1 - All classifications not listed below

GROUP 2 - Asbestos Abatement Worker and Hazardous Waste Worker; Lead Base Paint Worker

Group 3 - Dynamite Man

LABO0670-004 07/02/2014

MADISON COUNTY (St. Jacob)

	Rates	Fringes
LABORER		
GROUP 1	$ 28.00	21.20
GROUP 2	$ 28.50	21.20
GROUP 3	$ 29.95	21.20

LABORER CLASSIFICATIONS

GROUP 1 - General Laborers.

GROUP 2 - Brick Mason and Plasterer Tenders.

GROUP 3 - Dynamite and Powder Men.

LABO0674-001 08/01/2002

MADISON COUNTY (St. Jacob)

	Rates	Fringes
LABORER		
GROUP 1	$ 29.45	1.60
GROUP 2	$ 29.70	1.60
GROUP 3	$ 29.95	1.60
GROUP 4	$ 29.45	1.60

LABORER CLASSIFICATIONS

GROUP 1 - General Laborers.

GROUP 2 - Work in Septic tanks, cess pools, or dry wells (old or new); All feeders, mixers and nozzle men on gunnite or sandblasting work; When handling creosoted material; Raking or luting asphalt; Burning or cutting with torch; Working on Bottom of Sewer Trenches on Final Grading, Laying or Caulking of performed sectional Sewer Pipe; High time (20 feet or over) where exposed to an open fall; Operator of motor buggies; Any work performed in or on all types of cased wells; Cooking, mixing and applying of mastic such as sulfa-seal and/or other coal derivatives

GROUP 3 - Brick Mason and Plasterer Tenders.

GROUP 4 - Dynamite and Powder Men.

LABO0742-001 08/01/2013

ST. CLAIR (Mascoutah) and CLINTON (New Baden) COUNTIES

	Rates	Fringes
LABORERS		
Group 1	$ 26.00	21.90
Group 2	$ 26.50	21.90
Group 3	$ 27.50	21.90

LABORER CLASSIFICATIONS:

GROUP 1 - All classifications not listed below

GROUP 2 - Asbestos Abatement Worker and Hazardous Waste Worker; Lead Base Paint Worker

GROUP 3 - Dynamite Man

LABO0968-001 08/01/1997

CALHOUN COUNTY (Hardin)

	Rates	Fringes
LABORER		
GROUP 1	$ 25.80	.60
GROUP 2	$ 26.05	.60
GROUP 3	$ 26.30	.60
GROUP 4	$ 27.325	.60

LABORERS CLASSIFICATIONS

GROUP 1 - General Laborers.

GROUP 2 - Work in Septic tanks, cess pools, or dry wells (old or new); All feeders, mixers and nozzle men on gunnite or sandblasting work; When handling creosoted material;

Ranking or luting asphalt; Burning or cutting with torch; Working on Bottom of Sewer Trenches on Final Grading, Laying or Caulking or performed sectional Sewer Pipe; High time (20 feet or over) where exposed to an open fall; Operator of motor buggies; Any work performed in or on all types of cased wells; Cooking, mixing and applying of mastic such as sulfa-seal and/or other coal derivatives

GROUP 3 - Brick Mason and Plasterer Tenders.

GROUP 4 - Dynamite and Powder Men.

LABO1084-001 08/01/2015

BOND (Sorento) and MONTGOMERY COUNTIES

	Rates	Fringes
LABORERS		
Group 1	$ 25.50	25.05
Group 2	$ 26.00	25.05
Group 3	$ 27.00	25.05

LABORER CLASSIFICATIONS:

GROUP 1 - All classifications not listed below

GROUP 2 - Asbestos Abatement Worker and Hazardous Waste Worker; Lead Base Paint Worker

GROUP 3 - Dynamite Man

PAIN0058-002 05/01/2016

	Rates	Fringes
PAINTER (Bridge)	$ 31.63	16.89

Epoxy or Toxic-Lead-Based Paint Work-$1.00 Premimum

PLAS0090-001 08/01/2014

BOND, CALHOUN, CLINTON (WESTERN HALF EAST TO BUT NOT INCLUDE CARYLE), GREENE, JERSEY, MACOUPIN, MADISON, MONROE, MONTGOMERY, and ST. CLAIR COUNTIES

	Rates	Fringes
CEMENT MASON/CONCRETE FINISHER	$ 32.00	22.70

PLAS0090-005 08/01/2012

Clinton County

	Rates	Fringes
CEMENT MASON/CONCRETE FINISHER	$ 32.00	22.70

PLAS0143-007 08/01/2015

WASHINGTON COUNTY

	Rates	Fringes
CEMENT MASON/CONCRETE FINISHER	$ 35.50	19.70

TEAM0050-006 05/01/2015

BOND. CLINTON, MONROE, ST CLAIR, WASHINGTON COUNTIES

	Rates	Fringes
TRUCK DRIVER		
Group 1	$ 34.22	17.29
Group 2	$ 34.69	17.29
Group 3	$ 34.95	17.29
Group 4	$ 35.24	17.29
Group 5	$ 36.17	17.29

CLASSIFICATIONS:

GROUP 1: Drivers on 2 axles hauling less than 9 tons; air compressor & welding machines and brooms, including those pulled by separate units; Truck Driver Helper, warehouse employees; Mechanic Helpers; greasers and tiremen; pick-up trucks when hauling material, tools, or workers to and from and on the job site; and forklifts up to 6,000 lb capacity.

GROUP 2: 2 or 3 axles hualing more than 9 tons but hauling less than 16 tons; A-frame winch trucks; hydrolift trucks; Vactor Trucks or similar equipment when used for transportation purposes; Forklift over 6,000 lb.capacity; winch trucks; and four axle combiation units.

GROUP 3: 2, 3 or 4 Axles hauling 16 tons or more; 5-Axles or more combination units; drivers on water pulls; articulated dump trucks; mechanics and working forepersons.

GROUP 4: Low Boy and Oil Distributors.

GROUP 5: Drivers who require special protective clothing while employed on hazardous waste work.

TEAM0525-004 05/01/2016

CALHOUN, GREENE (South of a direct line that extends East from Pike County through Hillview/Whitehall to Macoupin County), JERSEY, MACOUPIN, MADISON, MONTGOMERY COUNTIES

	Rates	Fringes
TRUCK DRIVER		
Group 1	$ 35.15	18.03
Group 2	$ 35.64	18.03
Group 3	$ 35.91	18.03
Group 4	$ 36.21	18.03
Group 5	$ 37.17	18.03

CLASSIFICATIONS:

GROUP 1: Drivers on 2 axles hauling less than 9 tons; air compressor & welding machines and brooms, including those pulled by separate units; Truck Driver Helper, warehouse employees; Mechanic Helpers; greasers and tiremen; pick-up trucks when hauling material, tools, or workers to and from and on the job site; and forklifts up to 6,000 lb capacity.

GROUP 2: 2 or 3 axles hualing more than 9 tons but hauling less than 16 tons; A-frame winch trucks; hydrolift trucks; Vactor Trucks or similar equipment when used for transportation purposes; Forklift over 6,000 lb.capacity; winch trucks; and four axle combiation units.

GROUP 3: 2, 3 or 4 Axles hauling 16 tons or more; 5-Axles or more combination units; drivers on water pulls; articulated dump trucks; mechanics and working forepersons.

GROUP 4: Low Boy and Oil Distributors.

GROUP 5: Drivers who require special protective clothing while employed on hazardous waste work.

TEAM0916-004 05/01/2016

GREENE (North of a direct line that extends East from Pike County through Hillview/Whitehall to Macoupin County) COUNTY

	Rates	Fringes
TRUCK DRIVER		
Group 1	$ 35.15	18.03
Group 2	$ 35.64	18.03
Group 3	$ 35.91	18.03
Group 4	$ 36.21	18.03
Group 5	$ 37.17	18.03

CLASSIFICATIONS:

GROUP 1: Drivers on 2 axles hauling less than 9 tons; air compressor & welding machines and brooms, including those pulled by separate units; Truck Driver Helper, warehouse employees; Mechanic Helpers; greasers and tiremen; pick-up trucks when hauling material, tools, or workers to and from and on the job site; and forklifts up to 6,000 lb capacity.

GROUP 2: 2 or 3 axles hualing more than 9 tons but hauling less than 16 tons; A-frame winch trucks; hydrolift trucks; Vactor Trucks or similar equipment when used for transportation purposes; Forklift over 6,000 lb.capacity; winch trucks; and four axle combiation units.

GROUP 3: 2, 3 or 4 Axles hauling 16 tons or more; 5-Axles or more combination units; drivers on water pulls; articulated dump trucks; mechanics and working forepersons.

GROUP 4: Low Boy and Oil Distributors.

GROUP 5: Drivers who require special protective clothing while employed on hazardous waste work.

WELDERS - Receive rate prescribed for craft performing operation to which welding is incidental.

==========

Unlisted classifications needed for work not included within the scope of the classifications listed may be added after award only as provided in the labor standards contract clauses (29CFR 5.5 (a) (1) (ii)).

The body of each wage determination lists the classification and wage rates that have been found to be prevailing for the cited type(s) of construction in the area covered by the wage determination. The classifications are listed in alphabetical order of "identifiers" that indicate whether the particular rate is a union rate (current union negotiated rate for local), a survey rate (weighted average rate) or a union average rate (weighted union average rate).

Union Rate Identifiers

A four letter classification abbreviation identifier enclosed in dotted lines beginning with characters other than "SU" or "UAVG" denotes that the union classification and rate were prevailing for that classification in the survey. Example:

PLUM0198-005 07/01/2014. PLUM is an abbreviation identifier of the union which prevailed in the survey for this classification, which in this example would be Plumbers. 0198 indicates the local union number or district council number where applicable, i.e., Plumbers Local 0198. The next number, 005 in the example, is an internal number used in processing the wage determination. 07/01/2014 is the effective date of the most current negotiated rate, which in this example is July 1, 2014.

Union prevailing wage rates are updated to reflect all rate changes in the collective bargaining agreement (CBA) governing this classification and rate.

Survey Rate Identifiers

Classifications listed under the "SU" identifier indicate that no one rate prevailed for this classification in the survey and the published rate is derived by computing a weighted average rate based on all the rates reported in the survey for that classification. As this weighted average rate includes all rates reported in the survey, it may include both union and non-union rates. Example: SULA2012-007 5/13/2014. SU indicates the rates are survey rates based on a weighted average calculation of rates and are not majority rates. LA indicates the State of Louisiana. 2012 is the year of survey on which these classifications and rates are based. The next number, 007 in the example, is an internal number used in producing the wage determination. 5/13/2014 indicates the survey completion date for the classifications and rates under that identifier.

Survey wage rates are not updated and remain in effect until a new survey is conducted.

Union Average Rate Identifiers

Classification(s) listed under the UAVG identifier indicate that no single majority rate prevailed for those classifications; however, 100% of the data reported for the classifications was union data. EXAMPLE: UAVG-OH-0010 08/29/2014. UAVG indicates that the rate is a weighted union average rate. OH indicates the state. The next number, 0010 in the example, is an internal number used in producing the wage determination. 08/29/2014 indicates the survey completion date for the classifications and rates under that identifier.

A UAVG rate will be updated once a year, usually in January of each year, to reflect a weighted average of the current negotiated/CBA rate of the union locals from which the rate is based.

WAGE DETERMINATION APPEALS PROCESS

1.) Has there been an initial decision in the matter? This can be:

* an existing published wage determination
* a survey underlying a wage determination
* a Wage and Hour Division letter setting forth a position on a wage determination matter
* a conformance (additional classification and rate) ruling

On survey related matters, initial contact, including requests for summaries of surveys, should be with the Wage and Hour Regional Office for the area in which the survey was conducted because those Regional Offices have responsibility for the Davis-Bacon survey program. If the response from this initial contact is not satisfactory, then the process described in 2.) and 3.) should be followed.

With regard to any other matter not yet ripe for the formal process described here, initial contact should be with the Branch of Construction Wage Determinations. Write to:

Branch of Construction Wage Determinations
Wage and Hour Division
U.S. Department of Labor
200 Constitution Avenue, N.W.
Washington, DC 20210

2.) If the answer to the question in 1.) is yes, then an interested party (those affected by the action) can request review and reconsideration from the Wage and Hour Administrator (See 29 CFR Part 1.8 and 29 CFR Part 7). Write to:

Wage and Hour Administrator
U.S. Department of Labor
200 Constitution Avenue, N.W.
Washington, DC 20210

The request should be accompanied by a full statement of the interested party's position and by any information (wage payment data, project description, area practice material, etc.) that the requestor considers relevant to the issue.

3.) If the decision of the Administrator is not favorable, an interested party may appeal directly to the Administrative Review Board (formerly the Wage Appeals Board). Write to:

Administrative Review Board
U.S. Department of Labor
200 Constitution Avenue, N.W.
Washington, DC 20210

4.) All decisions by the Administrative Review Board are final.

==========

END OF GENERAL DECISION

General Decision Number: IL160001 11/11/2016 IL1

Superseded General Decision Number: IL20150001

State: Illinois

Construction Type: Building

Counties: Adams, Bond, Boone, Brown, Bureau, Calhoun, Carroll, Cass, Clinton, De Kalb, Fulton, Greene, Hancock, Henderson, Henry, Jersey, Jo Daviess, Knox, La Salle, Lee, Livingston, Logan, Macoupin, Marshall, Mason, McDonough, McLean, Menard, Mercer, Monroe, Montgomery, Morgan, Ogle, Pike, Putnam, Randolph, Rock Island, Schuyler, Scott, Stark, Stephenson, Warren, Washington, Whiteside, Winnebago and Woodford Counties in Illinois.

BUILDING PROJECTS (does not include single-family homes and apartments up to and including four stories, and also does not include landscape projects for BOONE and DEKALB COUNTIES).

Note: Under Executive Order (EO) 13658, an hourly minimum wage of $10.15 for calendar year 2016 applies to all contracts subject to the Davis-Bacon Act for which the solicitation was issued on or after January 1, 2015. If this contract is covered by the EO, the contractor must pay all workers in any classification listed on this wage determination at least $10.15 (or the applicable wage rate listed on this wage determination, if it is higher) for all hours spent performing on the contract in calendar year 2016. The EO minimum wage rate will be adjusted annually. Additional information on contractor requirements and worker protections under the EO is available at www.dol.gov/whd/govcontracts.

Modification Number	Publication Date
0	01/08/2016
1	01/15/2016
2	01/22/2016
3	01/29/2016
4	02/05/2016
5	02/12/2016
6	02/19/2016
7	02/26/2016
8	03/25/2016
9	04/01/2016
10	04/15/2016
11	04/22/2016
12	05/06/2016
13	05/13/2016
14	05/20/2016
15	05/27/2016
16	06/03/2016
17	06/17/2016
18	06/24/2016
19	07/01/2016
20	07/08/2016
21	07/15/2016
22	07/22/2016
23	08/05/2016
24	08/12/2016
25	08/19/2016
26	09/16/2016
27	09/30/2016
28	10/07/2016
29	10/14/2016
30	11/11/2016

IL160001 BRICKLAYER, PAINTER, PLUMBER

SEE IL160017 FOR OTHER TRADES

ASBE0017-003 06/01/2015

BUREAU, DE KALB, LA SALLE, LEE, LIVINGSTON AND PUTNAM COUNTIES

Pointer & Stonemason.....$ 29.67		16.27

BRIL0008-007 05/01/2011

BOND, CALHOUN, CLINTON, JERSEY, MACOUPIN (STAUNTON & MT. OLIVE), MONROE, MONTGOMERY, AND WASHINGTON COUNTIES

	Rates	Fringes
BRICKLAYER		
Bricklayer, Marble, and Tile Layer.....$	30.29	17.08
Terrazzo Worker.....$	30.79	10.88

BRIL0008-008 05/01/2014

ADAMS, BROWN, CASS, GREENE, HANCOCK, MACOUPIN (Except Staunton & Mt. Olive), MORGAN, MCDONOUGH, PIKE, SCHUYLER, AND SCOTT COUNTIES

	Rates	Fringes
BRICKLAYER.....$	30.00	18.31

BRIL0008-009 05/01/2014

MORGAN AND SCOTT COUNTIES

	Rates	Fringes
Cement Mason/Plasterer.....$	30.00	18.31

BRIL0008-010 05/01/2015

LOGAN, MASON, and MENARD COUNTIES

	Rates	Fringes
Bricklayer, Caulker, Cleaner, Pointer & Stonemason.....$	30.00	21.49

BRIL0008-027 05/01/2014

ADAMS, BROWN, CASS, GREENE, HANCOCK, MACOUPIN, MORGAN, MCDONOUGH, PIKE, SCHUYLER, AND SCOTT COUNTIES

	Rates	Fringes
Marble & Tile Setter and Terrazzo Worker.....$	29.53	17.52
Marble, terrazzo and tile finisher.....$	28.03	17.52

BRIL0008-028 05/01/2014

LOGAN, MASON, and MENARD COUNTIES

	Rates	Fringes
Marble Setter, Terrazzo Worker & Tile Setter.....$	29.53	17.52
Marble, terrazzo and tile finisher.....$	28.03	17.52

BRIL0008-029 05/01/2014

RANDOLPH COUNTY

	Rates	Fringes

Steel, and Bridges.....$ 34.60 19.85

PAIN0032-005 05/01/2016

RANDOLPH COUNTY

	Rates	Fringes
PAINTER	$ 29.26	15.18

Epoxy or Toxic-Lead-Based Paint Work-$1.00 Premimum

PAIN0058-001 05/01/2016

BOND, CALHOUN, CLINTON, GREENE, JERSEY, MACOUPIN, MONROE, MONTGOMERY, PIKE, and WASHINGTON COUNTIES

	Rates	Fringes
PAINTER	$ 30.43	16.89

Epoxy or Toxic-Lead-Based Paint Work-$1.00 Premimum

PAIN0090-002 05/01/2016

ADAMS, BROWN, CASS, LOGAN, MENARD, MORGAN, and SCOTT COUNTIES

	Rates	Fringes
PAINTER	$ 30.88	16.38

Epoxy or Toxic-Lead-Based Paint Work-$1.00 Premimum

PAIN0157-001 07/01/2015

FULTON, MARSHALL, MASON, SCHUYLER, AND WOODFORD COUNTIES

	Rates	Fringes
PAINTER		
Brush, Spray, Pressure Roller, Sandblasting, Bridges, & New Structural Steel Work	$ 34.60	19.85

PAIN0157-008 05/01/2016

BUREAU, FULTON, HANCOCK, LEE, LASALLE, LIVINGSTON, MCDONOUGH, MARSHALL, PUTNAM, STARK, AND WOODARD COUNTIES

	Rates	Fringes
GLAZIER	$ 34.12	20.20

PAIN0502-002 05/01/2016

CARROLL, HENDERSON, HENRY, KNOX, MERCER, ROCK ISLAND, WARREN, and WHITESIDE COUNTIES

	Rates	Fringes
PAINTER		
Brush and Roller	$ 28.42	13.05
Spray, Structural Steel, & Sandblasting	$ 28.92	13.05

PAIN0513-003 01/01/2016

BOND, CALHOUN, CLINTON, GREENE, JERSEY, MACOUPIN (Southside), MONROE, RANDOLPH, AND WASHINGTON COUNTIES

City), MORGAN, PIKE, & SCOTT

	Rates	Fringes
Plumber and Steamfitter.....	$ 41.84	16.57

PLUM0160-002 01/01/2016

RANDOLPH COUNTY (Southeastern side)

	Rates	Fringes
PLUMBER/PIPEFITTER.....	$ 43.60	17.70

PLUM0353-002 05/01/2016

FULTON, HANCOCK (Eastern Half), MCDONOUGH (Except Prairie), MARSHALL (South of Rt 17), MASON (North of Rt 136), SCHUYLER (Browning, Frederick & Hickory TWPS), STARK, and WOODFORD (North of Rt 116 TO Rt 116A, and Area West of Rt 116A to, but excluding Goodfield) COUNTIES

	Rates	Fringes
PIPEFITTER.....	$ 38.50	20.09

PLUM0360-001 07/01/2016

CLINTON (Northwestern part including St Rose, Frogtown, Jamestown & Keyport), RANDOLPH (Western 1/4 including Kellog, Modoc, Prairie, Durocker, and Roots), and MONROE (Except Hecker) COUNTIES

	Rates	Fringes
PLUMBER.....	$ 38.75	15.05

PLUM0439-002 01/01/2016

CLINTON (Northwestern part including St. Rose, Frogtown, Jamestown and Key Port), RANDOLPH (Western 1/4 including Kellog, Modoc, Prairie, Durocker, and Roots) AND MONROE (Except Hecker) COUNTIES

	Rates	Fringes
Steamfitter.....	$ 38.75	17.39

PLUM0501-002 06/01/2015

DE KALB

	Rates	Fringes
PLUMBER/PIPEFITTER.....	$ 45.76	26.92

PLUM0553-001 01/01/2016

BOND, CALHOUN, GREENE, JERSEY, MACOUPIN (South of Rt 108), AND MONTGOMERY (Southwest of Rt 127) COUNTIES

	Rates	Fringes
PLUMBER/PIPEFITTER.....	$ 40.71	13.50

FOOTNOTE:

A. 4 hours paid holiday for Christmas Eve if Holiday falls on

Vactor Trucks or similar equipment when used for transportation purposes; Forklift over 6,000 lb.capacity; winch trucks; and four axle combiation units.

GROUP 3: 2, 3 or 4 Axles hauling 16 tons or more; 5-Axles or more combination units; drivers on water pulls; articulated dump trucks; mechanics and working forepersons.

GROUP 4: Low Boy and Oil Distributors.

GROUP 5: Drivers who require special protective clothing while employed on hazardous waste work.

WELDERS - Receive rate prescribed for craft performing operation to which welding is incidental.

==========

Unlisted classifications needed for work not included within the scope of the classifications listed may be added after award only as provided in the labor standards contract clauses (29CFR 5.5 (a) (1) (ii)).

The body of each wage determination lists the classification and wage rates that have been found to be prevailing for the cited type(s) of construction in the area covered by the wage determination. The classifications are listed in alphabetical order of "identifiers" that indicate whether the particular rate is a union rate (current union negotiated rate for local), a survey rate (weighted average rate) or a union average rate (weighted union average rate).

Union Rate Identifiers

A four letter classification abbreviation identifier enclosed in dotted lines beginning with characters other than "SU" or "UAVG" denotes that the union classification and rate were prevailing for that classification in the survey. Example: PLUM0198-005 07/01/2014. PLUM is an abbreviation identifier of the union which prevailed in the survey for this classification, which in this example would be Plumbers. 0198 indicates the local union number or district council number where applicable, i.e., Plumbers Local 0198. The next number, 005 in the example, is an internal number used in processing the wage determination. 07/01/2014 is the effective date of the most current negotiated rate, which in this example is July 1, 2014.

Union prevailing wage rates are updated to reflect all rate changes in the collective bargaining agreement (CBA) governing this classification and rate.

Survey Rate Identifiers

Classifications listed under the "SU" identifier indicate that no one rate prevailed for this classification in the survey and the published rate is derived by computing a weighted average rate based on all the rates reported in the survey for that classification. As this weighted average rate includes all rates reported in the survey, it may include both union and non-union rates. Example: SULA2012-007 5/13/2014. SU indicates the rates are survey rates based on a weighted average calculation of rates and are not majority rates. LA indicates the State of Louisiana. 2012 is the year of survey on which these classifications and rates are based. The next number, 007 in the example, is an internal number used in producing the

wage determination. 5/13/2014 indicates the survey completion date for the classifications and rates under that identifier.

Survey wage rates are not updated and remain in effect until a new survey is conducted.

Union Average Rate Identifiers

Classification(s) listed under the UAVG identifier indicate that no single majority rate prevailed for those classifications; however, 100% of the data reported for the classifications was union data. EXAMPLE: UAVG-OH-0010 08/29/2014. UAVG indicates that the rate is a weighted union average rate. OH indicates the state. The next number, 0010 in the example, is an internal number used in producing the wage determination. 08/29/2014 indicates the survey completion date for the classifications and rates under that identifier.

A UAVG rate will be updated once a year, usually in January of each year, to reflect a weighted average of the current negotiated/CBA rate of the union locals from which the rate is based.

WAGE DETERMINATION APPEALS PROCESS

1.) Has there been an initial decision in the matter? This can be:

* an existing published wage determination
* a survey underlying a wage determination
* a Wage and Hour Division letter setting forth a position on a wage determination matter
* a conformance (additional classification and rate) ruling

On survey related matters, initial contact, including requests for summaries of surveys, should be with the Wage and Hour Regional Office for the area in which the survey was conducted because those Regional Offices have responsibility for the Davis-Bacon survey program. If the response from this initial contact is not satisfactory, then the process described in 2.) and 3.) should be followed.

With regard to any other matter not yet ripe for the formal process described here, initial contact should be with the Branch of Construction Wage Determinations. Write to:

Branch of Construction Wage Determinations
Wage and Hour Division
U.S. Department of Labor
200 Constitution Avenue, N.W.
Washington, DC 20210

2.) If the answer to the question in 1.) is yes, then an interested party (those affected by the action) can request review and reconsideration from the Wage and Hour Administrator (See 29 CFR Part 1.8 and 29 CFR Part 7). Write to:

Wage and Hour Administrator
U.S. Department of Labor
200 Constitution Avenue, N.W.
Washington, DC 20210

The request should be accompanied by a full statement of the interested party's position and by any information (wage payment data, project description, area practice material, etc.) that the requestor considers relevant to the issue.

3.) If the decision of the Administrator is not favorable, an interested party may appeal directly to the Administrative

Review Board (formerly the Wage Appeals Board). Write to:

Administrative Review Board
U.S. Department of Labor
200 Constitution Avenue, N.W.
Washington, DC 20210

4.) All decisions by the Administrative Review Board are final.

==========

END OF GENERAL DECISION

CERTIFICATE OF OWNER'S ATTORNEY AND AGENCY CONCURRENCE

CERTFICATE OF OWNER'S ATTORNEY

PROJECT NAME: Village of Maeystown - Proposed Connection with Fountain Water District

CONTRACTOR NAME:

I, the undersigned, _____, the duly authorized and acting legal representative of Village of Maeystown, do hereby certify as follows: I have examined the attached Contract(s) and performance and payment bond(s) and the manner of execution thereof, and I am of the opinion that each of the aforesaid agreements is adequate and has been duly executed by the proper parties thereto acting through their duly authorized representatives; that said representatives have full power and authority to execute said agreements on behalf of the respective parties named thereon; and that the foregoing agreements constitute valid and legally binding obligations upon the parties executing the same in accordance with the terms, conditions, and provisions thereof.

Name Date

AGENCY CONCURRENCE

As lender or insurer of funds to defray the costs of this Contract, and without liability for any payments thereunder, the Agency hereby concurs in the form, content, and execution of this Agreement.

Agency Representative Date

USDA Rural Development

Name

Intentionally Blank

USDA Rural Development Construction Sign

In accordance with attached Exhibit A, the Contractor _____ _____ shall erect one sign at a prominent location on the project when construction begins.

An electric version of this .pdf document may be found at: www.rurdev.usda.gov/IL_engineering.html. This document may be edited by project engineers to include specific project information.

USDA Rural Development will not approve plans and specifications until the sign detail is included in the appropriate contracts.

If funding from other Federal or a State Agency is being provided and a project sign is required by that funding source, the Community Programs Director may modify the standard project sign as determined appropriate. Sign details may also be modified to show multiple contractors, but typically only Prime Contractors should be shown.

The contractor will remove the temporary construction sign(s) when all construction has been completed.

o O o

TEMPORARY CONSTRUCTION SIGN FOR RURAL DEVELOPMENT PROJECTS

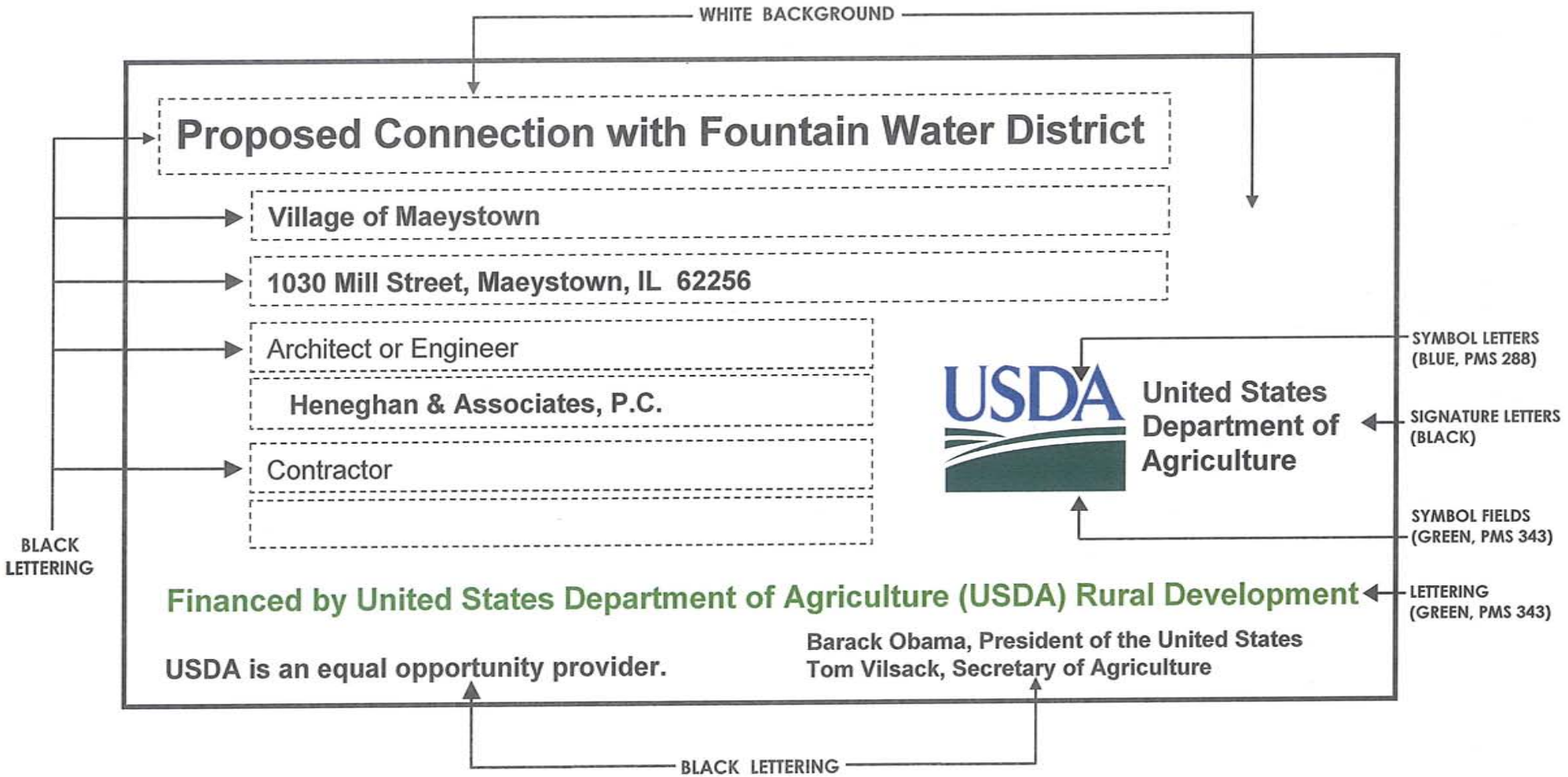

SIGN DIMENSIONS: 1200 mm x 2400 mm x 19 mm (approx. 4' x 8' x ¾")
PLYWOOD PANEL (APA RATED A-B GRADE–EXTERIOR)

www.rurdev.usda.gov/IL_engineering.html
(10/22/2014) PN 546

CONSTRUCTION CONTRACTORS
AFFIRMATIVE ACTION REQUIREMENTS
GOALS (%) FOR MINORITY AND WOMEN PARTICIPATION
As Published in the Friday, October 3, 1980 Federal Register

Goals for Participation of Women (Entire State) 6.9

Goals for Minority Participation:

Adams	**3.1**	**Edgar**	**4.8**	**Johnson**	**11.4**	**Menard**	**4.5**	**Shelby**	**4.0**
Alexander	**11.4**	**Edwards**	**3.5**	**Kane**	**19.6**	**Mercer**	**3.4**	**Stark**	**3.3**
Bond	**11.4**	**Effingham**	**11.4**	**Kankakee**	**9.1**	**Monroe**	**14.7**	**St. Clair**	**14.7**
Boone	**6.3**	**Fayette**	**11.4**	**Kendall**	**18.4**	**Montgomery**	**11.4**	**Stephenson**	**4.6**
Brown	**3.1**	**Ford**	**4.8**	**Knox**	**3.3**	**Morgan**	**4.0**	**Tazewell**	**4.4**
Bureau	**18.4**	**Franklin**	**11.4**	**Lake**	**19.6**	**Moultrie**	**4.0**	**Union**	**11.4**
Calhoun	**11.4**	**Fulton**	**3.3**	**LaSalle**	**18.4**	**Ogle**	**4.6**	**Vermilion**	**4.8**
Carroll	**3.4**	**Gallatin**	**3.5**	**Lawrence**	**3.5**	**Peoria**	**4.4**	**Wabash**	**3.5**
Cass	**4.0**	**Greene**	**11.4**	**Lee**	**4.6**	**Perry**	**11.4**	**Warren**	**3.3**
Champaign	**7.8**	**Grundy**	**18.4**	**Livingston**	**18.4**	**Piatt**	**4.8**	**Washington**	**11.4**
Clark	**2.5**	**Hamilton**	**3.5**	**Logan**	**4.0**	**Pike**	**3.1**	**Wayne**	**11.4**
Clay	**11.4**	**Hancock**	**3.4**	**Macon**	**7.6**	**Pope**	**5.2**	**White**	**3.5**
Clinton	**14.7**	**Hardin**	**5.2**	**Macoupin**	**11.4**	**Pulaski**	**11.4**	**Whiteside**	**3.4**
Coles	**4.8**	**Henderson**	**3.4**	**Madison**	**14.7**	**Putnam**	**18.4**	**Will**	**20.9**
Cook	**19.6**	**Henry**	**4.6**	**Marion**	**11.4**	**Randolph**	**11.4**	**Williamson**	**11.4**
Crawford	**2.5**	**Iroquois**	**18.4**	**Marshall**	**3.3**	**Richland**	**11.4**	**Winnebago**	**6.3**
Cumberland	**4.8**	**Jackson**	**11.4**	**Mason**	**3.3**	**Rock Island**	**4.6**	**Woodford**	**4.4**
DeKalb	**18.4**	**Jasper**	**11.4**	**Massac**	**5.2**	**Saline**	**3.5**		
DeWitt	**4.0**	**Jefferson**	**11.4**	**McDonough**	**3.3**	**Sangamon**	**4.5**		
Douglas	**4.8**	**Jersey**	**11.4**	**McHenry**	**19.6**	**Schuyler**	**3.3**		
DuPage	**19.6**	**JoDaviess**	**0.5**	**McLean**	**2.5**	**Scott**	**4.0**		

(10-22-97) PN 152

o O o

Intentionally Blank

U.S. DEPARTMENT OF AGRICULTURE

Certification Regarding Debarment, Suspension, Ineligibility and Voluntary Exclusion - Lower Tier Covered Transactions

This certification is required by the regulations implementing Executive Order 12549, Debarment and Suspension, 7 CFR Part 3017, Section 3017.510, Participants' responsibilities. The regulations were published as Part IV of the January 30, 1989, Federal Register (pages 4722-4733). Copies of the regulations may be obtained by contacting the Department of Agriculture agency with which this transaction originated.

(BEFORE COMPLETING CERTIFICATION, READ INSTRUCTIONS ON REVERSE)

(1) The prospective lower tier participant certifies, by submission of this proposal, that neither it nor its principals is presently debarred, suspended, proposed for debarment, declared ineligible, or voluntarily excluded from participation in this transaction by any Federal department or agency.

(2) Where the prospective lower tier participant is unable to certify to any of the statements in this certification, such prospective participant shall attach an explanation to this proposal.

Organization Name | PR/Award Number or Project Name

Name(s) and Title(s) of Authorized Representative(s)

Signature(s) | Date

Form AD-1048 (1/92)

Instructions for Certification

1. By signing and submitting this form, the prospective lower tier participant is providing the certification set out on the reverse side in accordance with these instructions.

2. The certification in this clause is a material representation of fact upon which reliance was placed when this transaction was entered into. If it is later determined that the prospective lower tier participant knowingly rendered an erroneous certification, in addition to other remedies available to the Federal Government, the department or agency with which this transaction originated may pursue available remedies, including suspension and/or debarment.

3. The prospective lower tier participant shall provide immediate written notice to the person to which this proposal is submitted if at any time the prospective lower tier participant learns that its certification was erroneous when submitted or has become erroneous by reason of changed circumstances.

4. The terms "covered transaction," "debarred," "suspended," "ineligible," "lower tier covered transaction," "participant," "person," "primary covered transaction," "principal," "proposal," and "voluntarily excluded," as used in this clause, have the meanings set out in the Definitions and Coverage sections of rules implementing Executive Order 12549. You may contact the person to which this proposal is submitted for assistance in obtaining a copy of those regulations.

5. The prospective lower tier participant agrees by submitting this form that, should the proposed covered transaction be entered into, it shall not knowingly enter into any lower tier covered transaction with a person who is debarred, suspended, declared ineligible, or voluntarily excluded from participation in this covered transaction, unless authorized by the department or agency with which this transaction originated.

6. The prospective lower tier participant further agrees by submitting this form that it will include this clause titled "Certification Regarding Debarment, Suspension, Ineligibility and Voluntary Exclusion - Lower Tier Covered Transactions," without modification, in all lower tier covered transactions and in all solicitations for lower tier covered transactions.

7* A participant in a covered transaction may rely upon a certification of a prospective participant in a lower tier covered transaction that it is not debarred, suspended, ineligible, or voluntarily excluded from the covered transaction, unless it knows that the certification is erroneous. A participant may decide the method and frequency by which it determines the eligibility of its principals. Each participant may, but is not required to, check the Nonprocurement List.

8. Nothing contained in the foregoing shall be construed to require establishment of a system of records in order to render in good faith the certification required by this clause. The knowledge and information of a participant is not required to exceed that which is normally possessed by a prudent person in the ordinary course of business dealings.

9. Except for transactions authorized under paragraph 5 of these instructions, if a participant in a covered transaction knowingly enters into a lower tier covered transaction with a person who is suspended, debarred, ineligible, or voluntarily excluded from participation in this transaction, in addition to other remedies available to the Federal Government, the department or agency with which this transaction originated may pursue available remedies, including suspension and/or debarment.

Form AD-1048 (1/92)
U. S.GPO: 1996-757-776/201 07

Form Approved
OMB No. 0575-0018

COMPLIANCE STATEMENT

This statement relates to a proposed contract with **Village of Maeystown**
(Name of borrower or guarantee)
who expects to finance the contract with assistance from Rural Development, United States Department of Agriculture (whether by a loan, grant, loan insurance, guarantee, or other form of financial assistance.) I am the undersigned bidder or prospective contractor. I represent that:

1. I ☐ have ☐ have not, participated in a previous participated in a previous contract or subcontract subject to Executive Order 11246 (regarding equal employment opportunity) or a preceding similar Executive Order.

2. If I have participated in such a contract or subcontract, I ☐ have, ☐ have not, filed all compliance reports that have been required to file in connection with the contract or subcontract.

3. I ☐ have, ☐ have not previously had contracts subject to the written affirmative action programs requirements of the Secretary of Labor.

4. If I have participated in such a contract or subcontract, I ☐ have, ☐ have not developed and place on file at each establishment affirmative action programs as required by the rules and regulations of the Secretary of Labor.

I understand that if I have failed to file any compliance reports that have been required of me, I am not eligible and will not be eligible to have my bid considered or to enter into the proposed contract unless and until I make an arrangement regarding such reports that is satisfactory to either the RHS, RBS, RUS, or to the office where the reports are required to be filed.

I also certify that I do not maintain or provided for my employees any segregated facilities at any of my establishments, and that I do not permit my employees to perform their services at any locations, under my control, where segregated facilities are maintained. I certify further that I will not maintain or provide for my employees any segregated facilities at any of my establishments, and that I will not permit my employees to perform their services at any location, under my control, where segregated facilities are maintained. I agree that a breach of this certification is a violation of the Equal Opportunity clause in my contract. As used in this certification, the term "segregated facilities" means any waiting rooms, work areas, restrooms and wash rooms, restaurants and other eating areas, time clocks, locker rooms and other storage or dressing areas, parking lots, drinking fountains, recreation or entertainment areas, transportation, and housing facilities provided for employees which are segregated by explicit directive or are in fact segregated on the basis of race, creed color, or national origin, because of habit, local custom, or otherwise. I further agree that (except where I have obtained identical certifications for proposed subcontractors for specific time periods) I will obtain identical certifications from proposed subcontractors prior to the award of subcontracts exceeding $10,000 which are not exempt from the provisions of the Equal Employment Opportunity clause; that I will retain such certifications in my files; and that I will forward the following notice to such proposed subcontractors (except where the proposed subcontractors have submitted identical certifications for specific time periods): (See Reverse).

According to the Paperwork Reduction Act of 1995, an agency may not conduct or sponsor, and a person is not required to respond to a collection of information unless it displays a valid OMB control number. The valid OMB control number for this information collection is 0575-0018. The time required to complete this information collection is estimated to average 10 minutes per response, including the time for reviewing instructions, searching existing data sources, gathering and maintaining the data needed, and completing and reviewing the collection of information.

Form Approved
OMB No. 0575-0018

NOTICE TO PROSPECTIVE SUBCONTRACTORS OF REQUIREMENTS FOR CERTIFICATIONS OF NON-SEGREGATED FACILITIES

A certification of Non-segregated Facilities, as required by the May 9, 1967, order (32 F.R. 7439, May 19, 1967) on Elimination of Segregated Facilities, by the Secretary of Labor, must be submitted prior to the award of a subcontract exceeding $10,000 which is not exempt from the provisions of the Equal Opportunity clause. The certification may be submitted for each subcontract or for all subcontracts during a period (i.e. quarterly, semiannually, or annually).

NOTE: The penalty for making false statements in offers is prescribed in 18 U.S.C. 1001.

DATE _____ _____

(*Signature of Bidder or Prospective Contractor)*

_____

Address (including Zip Code)

According to the Paperwork Reduction Act of 1995, an agency may not conduct or sponsor, and a person is not required to respond to a collection of information unless it displays a valid OMB control number. The valid OMB control number for this information collection is 0575-0018. The time required to complete this information collection is estimated to average 10 minutes per response, including the time for reviewing instructions, searching existing data sources, gathering and maintaining the data needed, and completing and reviewing the collection of information.

CERTIFICATION FOR CONTRACTS, GRANTS, AND LOANS

The undersigned certifies, to the best of his or her knowledge and belief, that:

1. No Federal appropriated funds have been paid or will be paid, by or on behalf of the undersigned, to any person for influencing or attempting to influence an officer or employee of an agency, a Member of Congress, an officer or employee of Congress, or an employee of a Member of Congress in connection with the awarding of any Federal contract, the making of any Federal grant or Federal loan, and the extension, continuation, renewal, amendment, or modification of any Federal contract, grant or loan.

2. If any funds other than Federal appropriated funds have been paid or will be paid to any person for influencing or attempting to influence an officer or employee of any agency, a Member of Congress, an officer or employee of Congress, or an employee of a Member of Congress in connection with this Federal contract, grant or loan, the undersigned shall complete and submit Standard Form - LLL, "Disclosure of Lobbying Activities," in accordance with its instructions.

3. The undersigned shall require that the language of this certification be included in the award documents for all subawards at all tiers (including contracts, subcontracts, and subgrants under grants and loans) and that all subrecipients shall certify and disclose accordingly.

This certification is a material representation of fact upon which reliance was placed when this transaction was made or entered into. Submission of this certification is a prerequisite for making or entering into this transaction imposed by section 1352, title 31, U.S. Code. Any person who fails to file the required certification shall be subject to a civil penalty of not less than $10,000 and not more than $100,000 for each such failure.

_____ _____

(name) (date)

_____

(title)

o0o

(08-21-91) PN 171

Intentionally Blank

WATER AND SEWER LINE CONSTRUCTION STANDARDS AND POLICIES

Established by the
ILLINOIS DEPARTMENT OF AGRICULTURE

The following standards and policies will serve to minimize the negative agricultural impacts that may result due to water and sewer line construction.

The standards and policies only apply to construction activities occurring partially or wholly on privately owned agricultural land. They do not apply to construction activities occurring on highway or railroad right-of-way, or on publicly owned land. The only exceptions are the construction standards relating to the repair of drainage tile (Item No. 3). The tile line construction standards shall be implemented regardless of where drainage tile is encountered.

Conditions

The mitigative actions specified in the construction standards and policies will be implemented in accordance with the conditions listed below:

A. All mitigative actions are subject to change by landowners, provided such changes are acceptable to the Project Sponsor.

B. The Project Sponsor may negotiate with landowners to carry out the mitigative actions that landowners wish to perform themselves. The landowners will receive the area commercial rate for their labor and machinery costs.

C. All mitigative actions, unless otherwise specified, will be implemented within 45 days of completion of water or sewer line facilities on any affected property, weather and landowner permitting. Temporary repairs will be made by the Project Sponsor during the construction process as needed to minimize the risk of additional property damage that may result from an extended construction time period.

D. All mitigative actions will extend to associated future construction, maintenance, and repairs.

E. The Project Sponsor will provide a copy of the Water and Sewer Line Construction Standards and Policies to all owners of agricultural land that will be impacted by water and/or sewer line construction, and will do at the time of easement contract negotiations.

Definitions

Project Sponsor - Entity proposing the construction of water or sewer lines and their related appurtenances.

Agricultural land - Land used for cropland, pastureland, managed woodlands, truck gardens, orchards, nurseries, and other related agricultural enterprises dependent upon soil integrity.

Cropland - Land used for growing row crops, small grains, or hay; includes land which was formerly used as cropland, but is currently in a government set-aside or conservation reserve program.

Water or Sewer Line	-	Includes water transmission and distribution lines, sewer trunk lines, sewer gravity flow lines, interceptors, or force mains and any related appurtenances.
Landowner	-	Person(s) responsible for making decisions regarding the restoration of the land adversely impacted by a water or sewer line.
Prime Farmland	-	Agricultural land comprised of soils that are defined by the USDA Natural Resources Conservation Service as being "Prime" soils (generally considered the most productive soils with the least input of nutrients and management).
Right-of-Way	-	Includes the permanent and temporary easements that the Project Sponsor acquires for the purpose of constructing water or sewer lines across privately owned land.

WATER AND SEWER LINE CONSTRUCTION STANDARDS AND POLICIES

1. Water and Sewer Line Depth

A. All water and sewer lines which are placed in trenches 24 inches in width or less will be buried with a minimum of 42 inches **(60 inches are suggested by the Illinois Department of Agriculture)** of top cover where they cross cropland.

B. All water and sewer lines that are placed in trenches greater than 24 inches in width will be buried with 60 inches of topcover where they cross cropland.

C. In terrain where bedrock prevents the placement of any water or sewer lines at the depths specified in 1.A. or 1.B. above, the water or sewer lines will be buried as deep as is practicable and feasible.

2. Topsoil Replacement

The following standards apply only when water and sewer lines are buried in trenches that are greater than 24 inches wide.

A. The actual depth of the topsoil, will first be stripped from the area to be excavated for a water or sewer line trench, all bore pits, and other areas of excavation.

B. All subsoil material that is removed from the trench will be placed in a second stockpile that is separate from the topsoil stockpile.

C. In backfilling the trench and other excavated areas, the stockpiled subsoil material will be placed back into the trench first. The topsoil will be replaced last so that it remains the top layer of soil.

D. The topsoil and subsoil must be replaced within the trench and other excavated area so that after settling occurs, the land's original contour (with an allowance for settling) will be achieved.

E. The subsoil displaced by the water or sewer line must be hauled off the landowner's premises or disposed of on the landowner's premises at a location that is acceptable to the landowner.

3. Repair Of Damaged Tile Lines

If underground drainage tile is damaged by water or sewer line construction, it must be repaired in a manner that assures the tile line's proper operation at the point of repair. The following standards and policies shall apply to the tile line repairs.

A. The Project Sponsor will endeavor to locate all tile lines prior to water or sewer line construction so repairs can be made if necessary. The Project Sponsor will contact affected landowners/tenants for their knowledge of tile line locations prior to any water or sewer line construction. All identified tile lines will be flagged to alert construction crews to the possible need for tile line repairs.

B. All tile lines shall be repaired with materials of the same or better quality as that which was damaged.

C. All damaged tile lines shall be immediately and temporarily repaired until such time that permanent repairs can be made.

D. Where tile lines are severed by water or sewer line trenches, non-compactable support must be added around the repaired tile lines in accordance with the attached detail drawings.

1. Within the trench, maximum rock size shall be 1 1/2 inch river gravel or 1 inch crushed stone for backfill under all tile lines.

2. There must be a minimum of one foot of separation between a tile line and the water or sewer line whether the line passes over or under the tile line.

3. In no instance will the grade of a tile line be changed.

E. Heavy construction equipment working within a water or sewer line right-of-way may crush shallow drainage tile. All tile lines intersecting the water or sewer line trench will be probed laterally for their entire length within the water or sewer line right-of-way to check for damaged tile. Probing must occur immediately prior to the permanent repair of any severed tile lines. If tile lines are found to be damaged, they must be repaired so they operate as well after construction as before construction began, and in a manner that is acceptable to the landowner.

F. All permanent tile line repairs must be made within 14 days of the date the damage occurred, weather and landowner permitting. If the landowner elects to make his/her own tile repairs, such damage payments will be negotiated with the Project Sponsor and must also be made within 14 days of the date of the completed repair work.

G. The Project Sponsor will remain liable for a period of three (3) years following the completion of the water or sewer lines to ensure that all tile line repairs do not fail. The Project Sponsor will not be responsible for tile line repairs that the Project Sponsor pays the landowner to perform.

FIELD TILE REPAIR

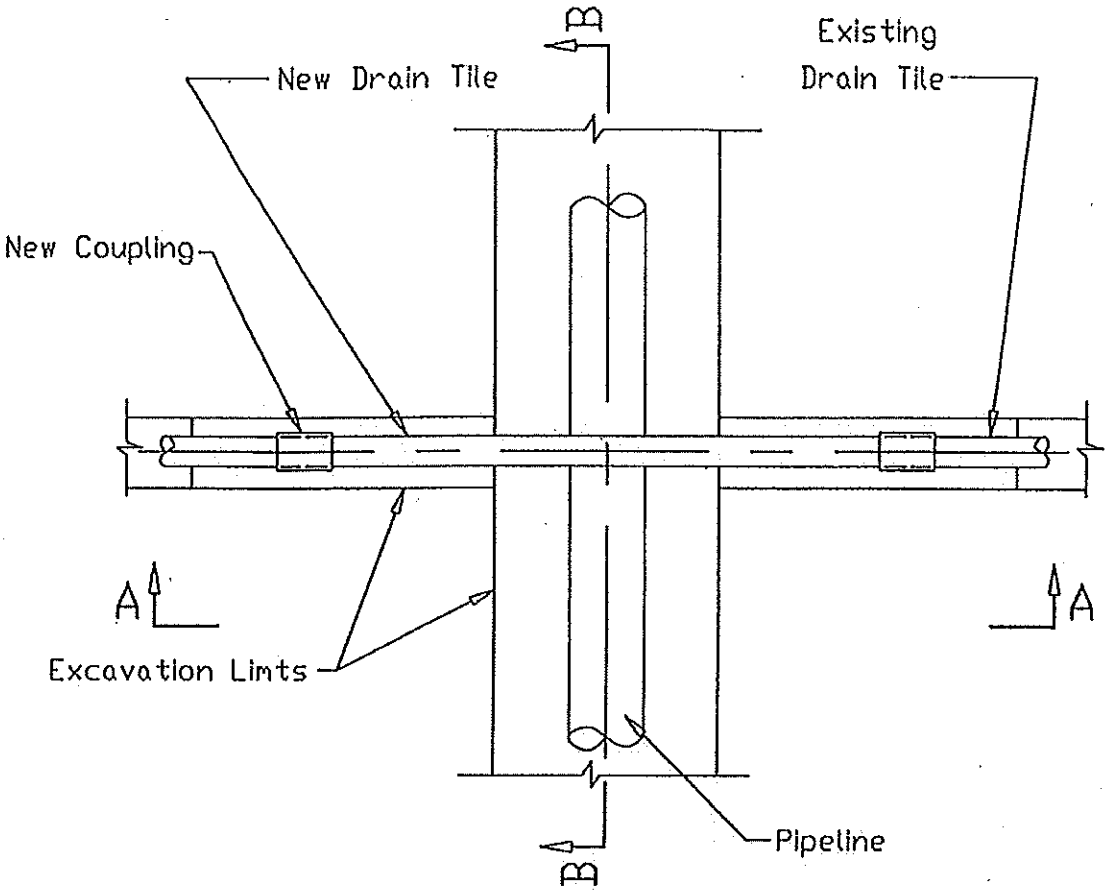

EXCAVATION PLAN

NOTES:

1. Coarse aggregate shall be gravel, crushed gravel, pit run gravel or crushed stone and shall conform to the requirements of IDOT Standard Specification for Road and Bridge Construction Article 1004.01 and CA-18 gradation.
2. Geotextile may be woven or non-woven and shall conform to the requirements of Class 1 in the attached table 1 or 2. In addition, when pipleline trench depth exceeds 10 feet, puncture strength (ASTM D 483) shall be 150 lbs or greater.
3. New tile should be equal to or better than existing tile. Dual Wall polyethylene tubing conforming to ASHTO M-252 or M-294 may be used where existing tile is rigid conduit (clay or concrete).

AUTOCAD2000

REFERENCE			
Project		USDA NATURAL RESOURCES CONSERVATION SERVICE ILLINOIS	STANDARD DWG. NO. IL-ENG-150A
Designed	Date		SHEET 1 OF 2
Checked	Date		DATE: 12/98
Approved	Date		

FIELD TILE REPAIR

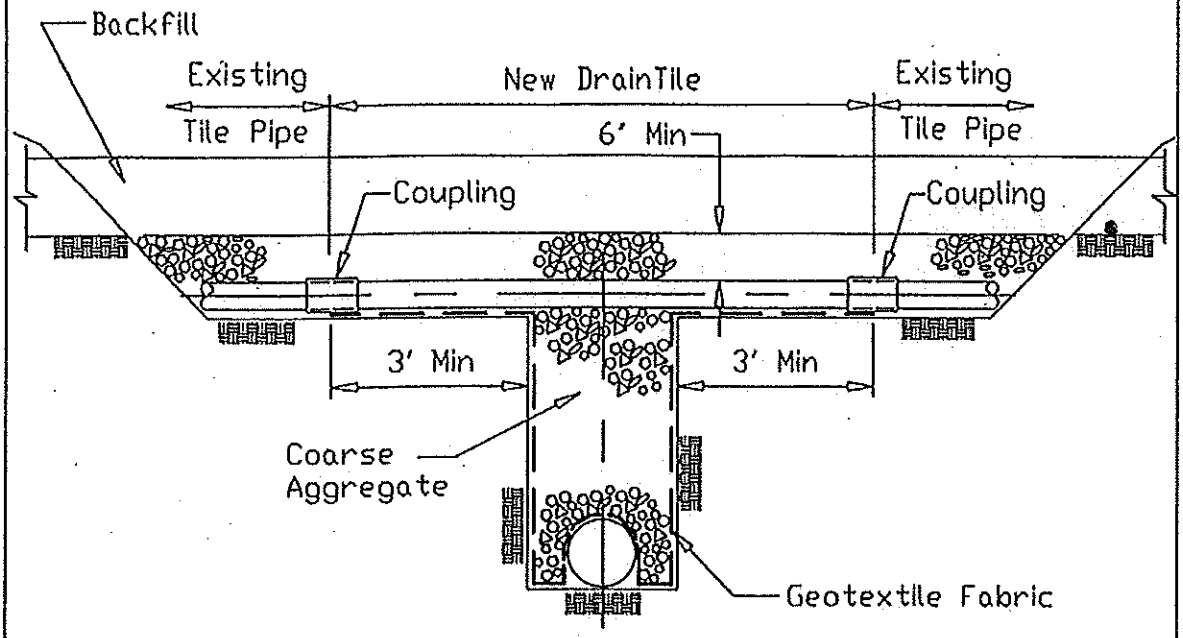

SECTION A-A

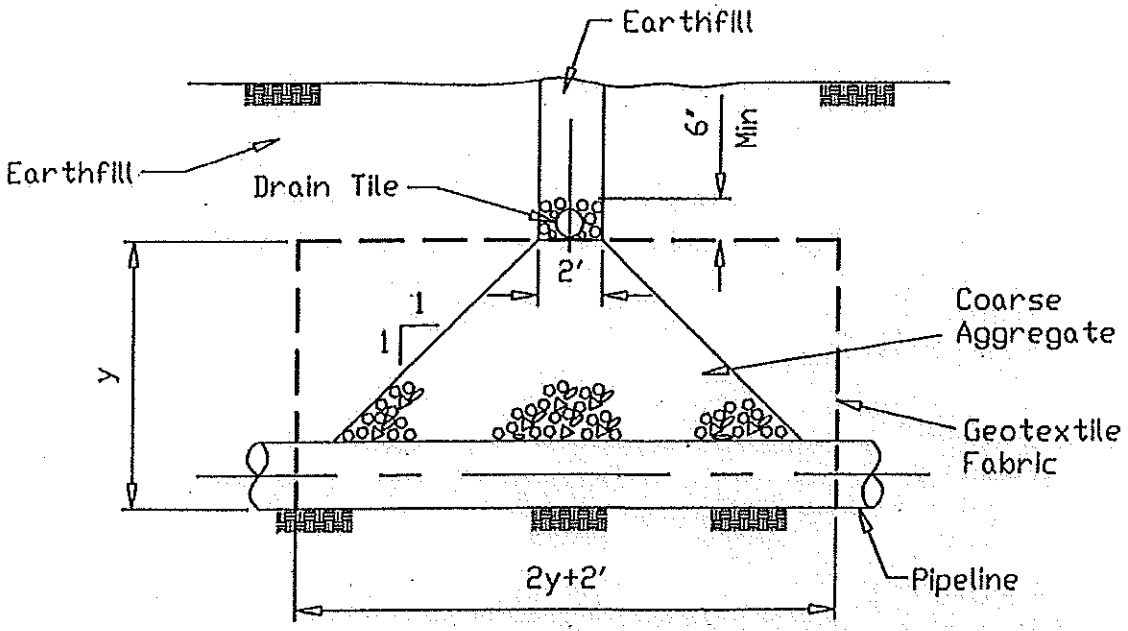

SECTION B-B

AUTOCAD2000

REFERENCE
Project
Designed Date
Checked Date
Approved Date

USDA NATURAL RESOURCES CONSERVATION SERVICE ILLINOIS

STANDARD DWG. NO.
IL-ENG-150B
SHEET 2 OF 2
DATE: 12/98

Material Specification 592—Geotextile

1. Scope

This specification covers the quality of geotextiles.

2. General requirements

Fibers (threads and yarns) used in the manufacture of geotextile shall consist of synthetic polymers composed of a minimum of 85 percent by weight polypropylenes, polyesters, polyamides, polyethylene, polyolefins, or polyvinylidene-chlorides. They shall be formed into a stable network of filaments or yarns retaining dimensional stability relative to each other. The geo-textile shall be free of defects and conform to the physical requirements in tables 592–1 and 592–2. The geotextile shall be free of any chemical treatment or coating that significantly reduces its porosity. Fibers shall contain stabilizers and/or inhibitors to enhance resistance to ultraviolet light.

Thread used for factory or field sewing shall be of contrasting color to the fabric and made of high strength polypropylene, polyester, or polyamide thread. Thread shall be as resistant to ultraviolet light as the geotextile being sewn.

3. Classification

Geotextiles shall be classified based on the method used to place the threads or yarns forming the fabric. The geotextiles will be grouped into woven and nonwoven types.

Woven—Fabrics formed by the uniform and regular interweaving of the threads or yarns in two directions. Woven fabrics shall be manufactured from monofilament yarn formed into a uniform pattern with distinct and measurable openings, retaining their position relative to each other. The edges of fabric shall be selvedged or otherwise finished to prevent the outer yarn from unraveling.

Nonwoven—Fabrics formed by a random placement of threads in a mat and bonded by heat-bonding, resin-bonding, or needle punching. Nonwoven fabrics shall be manufactured from individual fibers formed into a random pattern with distinct, but variable small openings, retaining their position relative to each other when bonded by needle punching, heat, or resin bonding. The use of nonwovens other than the needle punched geotextiles is somewhat restricted (see note 3 of table 592–2).

4. Sampling and testing

The geotextile shall meet the specified requirements (table 592–1 or 592–2) for the product style shown on the label. Product properties as listed in the latest edition of the "Specifiers Guide," Geotechnical Fabrics Report, (Industrial Fabrics Association International, 1801 County Road BW, Roseville, MN 55113-4061) and that represent minimum average roll values, are acceptable documentation that the product style meets the requirements of these specifications.

For products that do not appear in the above directory or do not have minimum average roll values listed, typical test data from the identified production run of the geotextile will be required for each of the specified tests (tables 592–1 or 592–2) as covered under clause AGAR 452.236-76.

5. Shipping and storage

The geotextile shall be shipped/transported in rolls wrapped with a cover for protection from moisture, dust, dirt, debris, and ultraviolet light. The cover shall be maintained undisturbed to the maximum extend possible before placement.

Each roll of geotextile shall be labeled or tagged to clearly identify the brand, class, and the individual production run in accordance with ASTM D 4873.

Table 592–1 Requirements for woven geotextiles

Property	Test method	Class I	Class II & III	Class IV
Tensile strength (pounds) 1/	ASTM D 4632 grab test	200 minimum in any principal direction	120 minimum in any principal direction	180 minimum in any principal direction
Elongation at failure (percent) 1/	ASTM D 4632 grab test	<50	<50	<50
Puncture (pounds) 1/	ASTM D 4833	90 minimum	60 minimum	60 minimum
Ultraviolet light (% residual tensile strength)	ASTM D 4355 150-hr exposure	70 minimum	70 minimum	70 minimum
Apparent opening size (AOS)	ASTM D 4751	As specified, but no smaller than 0.212 mm (#70) 2/	As specified, but no smaller than 0.212 mm (#70) 2/	As specified, but no smaller than 0.212 mm (#70) 2/
Percent open area (percent)	CWO-02215-86	4.0 minimum	4.0 minimum	1.0 minimum
Permitivity sec^{-1}	ASTM D 4491	0.10 minimum	0.10 minimum	0.10 minimum

1/ Minimum average roll value (weakest principal direction).
2/ U.S. standard sieve size.
Note: CWO is a USACE reference.

Table 592–2 Requirements for nonwoven geotextiles

Property	Test method	Class I	Class II	Class III	Class IV 3/
Tensile strength (lb) 1/	ASTM D 4632 grab test	180 minimum	120 minimum	90 minimum	115 minimum
Elongation at failure (%) 1/	ASTM D 4632	≥ 50	≥ 50	≥ 50	≥ 50
Puncture (pounds)	ASTM D 4833	80 minimum	60 minimum	40 minimum	40 minimum
Ultraviolet light (% residual tensile strength)	ASTM D 4355 150-hr exposure	70 minimum	70 minimum	70 minimum	70 minimum
Apparent opening size (AOS)	ASTM D 4751	As specified max. #40 2/	As specified max. #40 2/	As specified max. #40 2/	As specified max. #40 2/
Permittivity sec^{-1}	ASTM D 4491	0.70 minimum	0.70 minimum	0.70 minimum	0.10 minimum

1/ Minimum average roll value (weakest principal direction).
2/ U.S. standard sieve size.
3/ Heat-bonded or resin-bonded geotextile may be used for classes III and IV. They are particularly well suited to class IV. Needle-punched geotextiles are required for all other classes.

4. **Rock Removal**

A. The top 42 inches of a water or sewer line trench will not be backfilled with soil containing rocks that are larger than 3 inches in any dimension.

B. If trenching, blasting, or boring operations are required through rocky terrain, suitable precautions will be taken to eliminate the potential for rocks to become interspersed with the soil material that is placed back in the trench.

C. Rocks and/or soil containing rocks that are larger than 3 inches in any dimension must be hauled off the landowner's premises or disposed of on the landowner's premises at a location that is mutually acceptable to the landowner and the Project Sponsor.

5. **Removal Of Construction Debris**

All construction-related debris and material will be removed from the landowner's property. (Note: Such material to be removed would include litter generated by the construction crews.)

6. **Compaction, Rutting, Fertilization, Liming**

A. When water and sewer lines are buried in trenches that are **greater than 24 inches in width:**

1. Compaction will be alleviated on the trench and any adjacent work areas that are traversed by construction equipment. Cropland will be ripped at least 18 inches deep and pasture and woodland will be ripped or chiseled at least 12 inches deep.

2. Any other areas of the right-of-way which are traversed by construction equipment and related vehicles will be ripped or chiseled at least 12 inches deep.

3. At least 3 passes will be made over all lands to be ripped and/or chiseled.

4. All cropland that has been disturbed by construction activities will be limed and fertilized where necessary in order to benefit the current and/or next year's agricultural production or vegetative cover to control soil erosion.

B. When water and sewer lines are buried in trenches **less than 24 inches wide**, all right-of-way that has been traversed by construction equipment and related vehicles will be chiseled at least 12 inches deep with at least 3 passes being made.

C. All ripping and chiseling will be done at a time when the soils are dry enough for normal tillage operations to occur on undisturbed cropland adjacent to the areas to be tilled.

7. **Land Leveling**

A. The Project Sponsor will remain liable, for a period of two (2) years following the completion of a water or sewer line, to restore any right-of-way to its original elevation and contour should uneven settling occur or surface drainage problems develop due to inaccurate land leveling immediately following a water or sewer line's construction.

B. The Project Sponsor will provide the landowners with a telephone number and address that may be used to alert the Project Sponsor of the need to perform additional land leveling services.

8. Prevention Of Soil Erosion

A. The Project Sponsor will work with landowners to prevent excessive erosion on lands disturbed by construction. Reasonable methods will be implemented to control erosion. This is not a requirement, however, if the land across which a water or sewer line is constructed is bare cropland that the landowner intends to leave bare until the next crop is planted.

B. If the landowner and Project Sponsor cannot agree upon a reasonable method to control erosion on the landowner's right-of-way, the Project Sponsor will follow the recommendations of the appropriate county Soil and Water Conservation District if the landowner so requests.

9. Repair Of Damaged Soil Conservation Practices

All soil conservation practices (such as terraces, grassed waterways, filter strips, concrete structures, dams, etc.) that are damaged by water or sewer line construction will be restored to at least their pre-construction condition.

10. Damages To Private Property

A. With the exception of tile line repairs, the Project Sponsor will repair, replace, or pay to repair or replace damaged private property within 45 days, weather and landowner permitting, after a water or sewer line has been constructed across any affected property.

B. Similar relief for damages will be extended by the Project Sponsor for any construction-related damages that occur off of the established water or sewer line right-of-way.

C. The Project Sponsor will remain liable to correct damages to private property beyond the initial construction of a water or sewer line, to those damages incurred by future construction, operation, maintenance, and repairs.

11. Clearing Of Trees And Brush From The Easement

A. If trees are to be removed from the right-of-way, the Project Sponsor will consult with the landowner to see if there are trees of commercial or other value to the landowner.

B. If there are trees of commercial or other value to the landowner, the Project Sponsor will allow the landowner the right to retain ownership of the trees with the disposition of the trees to be negotiated prior to the commencement of land clearing.

C. The Project Sponsor will follow the landowner's desires which are consistent with any applicable laws or ordinances regarding the disposal of trees, brush, and stumps of no value to the landowner by burning, burial, etc., or complete removal from any affected property.

12. Interference With Irrigation Systems

A. If a water or sewer line intersects an operational (or soon to be operational) spray irrigation system, the Project Sponsor will establish with the landowner an acceptable amount of time the irrigation system may be out of service.

B. If an irrigation system interruption results in crop damages, either on the water or sewer line right-of-way or off the right-of-way, the landowner will be compensated for all such crop damages.

C. If it is feasible and mutually acceptable to the Project Sponsor and the landowner, temporary measures will be implemented to allow an irrigation system to continue to operate across land on which a water or sewer line is also being constructed.

13. Ingress And Egress Routes

Prior to any water or sewer line construction, the Project Sponsor and the landowner will reach a mutually acceptable agreement on the route that will be utilized for entering and leaving the water or sewer line right-of-way should access to the right-of-way not be practical or feasible from adjacent segments of the water or sewer line right-of-way or from public highway or railroad right-of-way.

14. Temporary Roads

A. The location of temporary roads to be used for construction purposes will be negotiated with the landowner.

B. If temporary roads must be constructed, they will be designed to not impede surface drainage soil erosion on or near the temporary roads will be minimized.

C. Upon abandonment, temporary roads may be left intact through mutual agreement of the landowner and the Project Sponsor.

D. If the temporary roads are to be removed, the right-of-way upon which the temporary roads are constructed will be returned to their previous use and restored to the same or better condition as existed prior to their construction.

15. Weed Control

A. On any right-of-way over which the Project Sponsor has jurisdiction as to the surface use of such land (well heads, pump or lift stations, valve sites, etc.), the Project Sponsor will provide for weed control in a manner that does not allow for the spread of weeds onto adjacent lands used as cropland.

B. The Project Sponsor will remain liable for the costs incurred by owners of land adjacent to surface facilities when the landowners must control weeds on their land which have spread from land accommodating water or sewer line surface facilities.

16. Pumping Of Water From Open Trenches

A. In the event it becomes necessary to pump water from open trenches, the Project Sponsor will pump the water in a manner that will avoid damaging adjacent agricultural land. Such damages include, but are not limited, inundation of crops for more than 24 hours and the deposition of sediment and gravel in fields, pastures, ditches, and any water bodies or water courses.

B. If it is impossible to avoid water-related damages as described in 16.A. above, the Project Sponsor will compensate the landowners for the damages or will correct the

damages so as to restore the agricultural land, water courses, etc. to their pre-existing condition.

C. All pumping of water shall comply with existing drainage laws, local ordinances relating to such activities, and provisions of the Clean Water Act.

17. Aboveground Facilities

Aboveground facilities shall be located so they will not be a hindrance to ongoing agricultural activities occurring on the lands adjacent to the facilities. First priority shall be made to locating aboveground facilities on right-of-way that is not used as cropland. If this is not feasible, such facilities shall be located so as to incur the least hindrance to the adjacent cropping operations (i.e., located in field corners or areas where at least one side is not used for cropping purposes).

18. Advance Notice Of Access To Private Property

A. The Project Sponsor will provide the landowner or tenant with a minimum of 24 hours prior notice before accessing his/her property for the purpose of constructing a water or sewer line.

B. Prior notice shall first consist of a personal contact or a telephone contact, whereby the landowner or tenant is informed of the Project Sponsor's intent to access the land. If the landowner or tenant cannot be reached in person or by telephone, the Project Sponsor will mail or hand deliver to the landowner or tenant's home a dated, written notice of the Project Sponsor's intent. The landowner or tenant need not acknowledge receipt of the written notice before the Project Sponsor can enter the landowner's property.

19. Reporting Of Inferior Agricultural Impact Mitigation Work

Prior to the installation of any water or sewer line, the landowners will be provided with a number they can call to alert the Project Sponsor should landowners observe inferior work relating to the agricultural impact mitigation work which is performed on their property.

20. Indemnification

For any water or sewer line installation, the Project Sponsor will indemnify all landowners, their heirs, successors, legal representatives, and assigns from and against all claims, injuries, suits, damages, costs, losses, and expenses including legal fees resulting from or arising out of the construction, maintenance, removal, repair, use or existence of a water or sewer line, whether heretofore or hereafter constructed, including damage to a water or sewer line or any of its appurtenances and the leaking of its contents, except where claims, injury, suits, damages, costs, losses, and expenses are caused by the negligence or intentional acts of the landowners, their heirs, successors, legal representatives, and assigns.

PARTIAL WAIVER OF LIEN

To All Whom It May Concern:

WHEREAS, the undersigned has been employed by (A)_____

_____to

furnish labor and materials for (B) _____

_____..under

a contract (C) _____ for the

improvement of the premises described as (D) _____

_____ in the

_____ (City-Village) of _____, County of _____, State of _____ of which

_____ is the Owner.

NOW, THEREFORE, this _____ day of _____, 20____, for and in consideration of the sum of (E) _____Dollars ($_____)

paid simultaneously herewith, the receipt whereof is hereby acknowledged by the undersigned, the undersigned does hereby waive and release to the extent only of the aforesaid amount, any lien rights to, or claim of lien with respect to and on said above-described premises, and the improvements thereon, and on the monies or other considerations due or to become due from the owner, by virtue of said contract, on account of labor, services, materials, fixtures, apparatus or machinery furnished by the undersigned to or for the above-described premises, but only to the extent of the payment aforesaid.

(F)_____ (SEAL)
(name of sole ownership, corporation or partnership)

(Affix corporate Seal here)

_____ (SEAL)
(Signature)

TITLE:_____

INSTRUCTIONS FOR PARTIAL WAIVER

(A) Name person or firm with whom you agreed to furnish either labor, or services, or materials, or both.
(B) Fill in nature and extent of work: strike the word labor or the word materials if not in your contract.
(C) If you have more than one contract on the same premises, describe the contract by number, if available, date and extent of work.
(D) Furnish an accurate enough description of the improvement and location of the premises so that it can be distinguished from any other property.
(E) Amount shown should be the amount actually received on that date.
(F) If waiver is for a corporation, corporate name should be used, corporate seal affixed and title of officer signing waiver should be set forth; if waiver is for a partnership, the partnership name should be used, partner should sign and designate himself as partner.

Construction Industry Affairs Committee of Chicago.

Intentionally Blank

FINAL WAIVER OF LIEN

To All Whom It May Concern:

WHEREAS, the undersigned has been employed by (A)_____

_____to

furnish labor and materials for (B) _____

_____..under

a contract (C) _____ for the

improvement of the premises described as (D) _____

_____ in the

_____ (City-Village) of _____, County of _____, State of _____ of which

_____ is the Owner.

NOW, THEREFORE, this _____ day of _____, 20____, for and in consideration of the sum of

(E) _____Dollars ($_____)

paid simultaneously herewith, the receipt whereof is hereby acknowledged by the undersigned, the undersigned does hereby waive and release any lien rights to, or claim of lien with respect to and on said above-described premises, and the improvements thereon, and on the monies or other considerations due or to become due from the owner, on account of labor, services, materials, fixtures, apparatus or machinery heretofore or which may hereafter be furnished by the undersigned to or for the above-described premises, by virtue of said contract.

(F)_____ (SEAL)
(name of sole ownership, corporation or partnership)

(Affix corporate
Seal here)

_____ (SEAL)
(Signature)

TITLE:_____

INSTRUCTIONS FOR FINAL WAIVER

(A) Person or firm with whom you agreed to furnish either labor, or services, or materials, or both.
(B) Fill in nature and extent of work: strike the word labor or the word materials if not in your contract.
(C) If you have more than one contract on the same premises, describe the contract by number, if available, date and extent of work.
(D) Furnish an accurate enough description of the improvement and location of the premises so that it can be distinguished from any other property.
(E) Amount shown should be the amount actually received and equal to total amount of contract as adjusted.
(F) If waiver is for a corporation, corporate name should be used, corporate seal affixed and title of officer signing waiver should be set forth; if waiver is for a partnership, the partnership name should be used, partner should sign and designate himself as partner.

Approved By The
Construction Industry Affairs Committee (CIAC).

Intentionally Blank

TECHNICAL PROVISIONS

Intentionally Blank

Village of Maeystown

Proposed Connection with Fountain Water District

Technical Provisions

Section 14 - General Requirements .....14-1 to 14-9

Section 21 - Concrete - Plain and Reinforcement.....21-1 to 21-7

Section 31 - Surface Replacement and Site Work.....31-1 to 31-24

Section 41 - Installation of Water Main and Appurtenances.....41-1 to 41-8

Section 51 - Polyvinyl Chloride (PVC) Water Main .....51-1 to 51-6

Section 52 - Restrained-Joint (PVC) Water Main, Rubber Ring Joints 52-1

Section 53 - Ductile Iron Pipe.....53-1 to 53-3

Section 54 - Boring Water Mains .....54-1 to 54-5

Section 57 - Valves, Hydrants, and Appurtenances.....57-1 to 57-5

Section 64 - Master Meter Station .....64-1 to 64-24

Section 82 - Electrical.....82-1 to 82-5

Section 84 - Telemetry.....84-1 to 84-2

Section 111 – Subsurface Investigation and Design-Construction Recommendations 111-1

Intentionally Blank

GENERAL REQUIREMENTS

Table of Contents

Section 14

PAGE

14.01 Scope of Work 14-1

14.02 Construction Sequence 14-2

14.03 Structures and Utilities Encountered 14-2

14.04 Water Line Damage 14-4

14.05 Standard Specifications 14-4

14.06 Rights-of-Way and Easements 14-4

14.07 Equipment and Products 14-6

14.08 Manufacturer's Representatives 14-6

14.09 Soil Boring Data 14-7

14.10 Cleaning Up 14-7

14.11 Payment for Water Used 14-8

14.12 Location of the Work 14-8

14.13 Coordination with Local Roadway Officials 14-8

14.14 Coordination with Local Electrical and Telephone Utilities 14-8

14.15 Coordination with Resident Project Representative 14-9

14.16 Contract Responsibility 14-9

14.17 NPDES Permit Compliance 14-9

Intentionally Blank

GENERAL REQUIREMENTS

Section 14

14.01 SCOPE OF WORK

The work, as proposed, includes the furnishing of all labor, materials, equipment, transportation and performing of all operations required to construct improvements for the OWNER, all as shown on the Drawings and/or as herein specified.

An attempt has been made to provide as much information on the Drawings as possible in regard to both existing and proposed conditions, although extreme accuracy in terms of dimensions and sizes of pumps, piping, etc., is not guaranteed. It is therefore the CONTRACTOR's responsibility to examine the Drawings, Specifications, and work site; to become familiar with the conditions and limitations applying to the work; and to verify all measurements, distances, levels, dimensions, quantities, etc., prior to making their bid, ordering materials, and/or starting work. By the act of having submitted a bid, the CONTRACTOR will be deemed to have made such examinations and verifications, and to have made allowances for such in their bid. If any major discrepancies occur between the Drawings and actual conditions, the CONTRACTOR shall notify the ENGINEER before submitting their bid and/or starting the work. In case of conflict between the Drawings and project Specifications, the CONTRACTOR shall notify the ENGINEER prior to bidding, to clarify the discrepancy and obtain a decision on which document governs. If the CONTRACTOR or any of their subcontractors fail to notify the ENGINEER prior to bidding, then the CONTRACTOR shall provide and install the intended material or equipment at no additional cost to the Contract Price.

It shall be the responsibility of the CONTRACTOR to furnish and install complete and working systems to perform the intended purposes as required by the Drawings and these Specifications. The CONTRACTOR shall be responsible for all details which may be necessary to properly install, adjust and place into operation the complete installation and shall include the costs of all such details in the Bid.

The CONTRACTOR shall guarantee that the equipment furnished shall be properly installed, and when properly operated, shall perform the duty for which it is intended. They shall guarantee all materials, workmanship, and completed installation to be first class in every particular and shall, at their own expense, furnish and replace any part or parts that may prove defective in material, equipment, or workmanship within one (1) year from the date of substantial completion, in accordance with the General Conditions of this Contract and Section 61 of the Technical Provisions.

This work shall be governed by an IEPA permit for construction. This permit shall be obtained for the CONTRACTOR by the OWNER before any construction operations begin. The OWNER will also obtain the necessary easements, NPDES permits, highway permits, and railroad permits to construct the improvements. The CONTRACTOR shall

familiarize themselves with all requirements as to traffic control, flagmen, maintenance of trench, advance warning signs, etc., as required by state and local highway departments and railroads.

The CONTRACTOR is responsible for conforming to the requirements of all applicable health and safety regulations and precautions as required by local, state and federal regulatory agencies including, but not limited to OSHA and IDOL. In accordance with the requirements of the OSHA regulations for construction, the CONTRACTOR shall provide and require the use of personal protective and lifesaving equipment for all persons working in or about the Project.

14.02 CONSTRUCTION SEQUENCE

This project consists of building a water main to connect the Village of Maeystown's system to Fountain Water District's water distribution system and building a master meter station. It is in the best interest of the OWNER to place into operation the completed master meter prior to the demolition of the existing water plant. Consequently, there are two separate substantial completion milestones for this Project. The construction of the master meter station shall be constructed and placed into operation as a first priority by the CONTRACTOR.

Construction activities by the CONTRACTOR shall not cause any interruption of the potable water supply to the OWNER or its partnering members – Fountain Water District.

The CONTRACTOR shall submit two (2) copies of a detailed outline of their proposed construction sequence within ten (10) days after execution of the Agreement and along with submission of their progress and shop drawing schedules (see the General Conditions). The submittal shall be subject to the approval of the OWNER and ENGINEER.

14.03 STRUCTURES AND UTILITIES ENCOUNTERED

Various underground and surface structures may or may not be shown on the Drawings. The location and dimensions of such structures where given do not purport to be absolutely correct. The structures are plotted on the Drawings for the information of the CONTRACTOR but information so given is not to be construed as a representation that such structures will be found or encountered as plotted. Other structures may also be encountered which are not shown on the Drawings.

The CONTRACTOR shall maintain in operating condition all utilities encountered in this work. Any existing utilities damaged as a result of this construction shall be repaired to the satisfaction of the owner of the utility at the CONTRACTOR's expense, whether or not said utilities are shown on the Drawings. Existing utilities may be relocated with the approval of the owner of the utility. This relocation shall be at the CONTRACTOR's expense, done according to the requirements of the utility owner, and shall be sufficient to clear the proposed improvement.

Before beginning work in an area, the CONTRACTOR shall contact JULIE at 800-892-0123 and any other non-JULIE member companies maintaining utilities, pipeline, transmission lines, and any other potential obstacles in the project area and request their assistance in field locating their utilities in that area. The CONTRACTOR, however, shall be solely responsible for the location of utilities. The utilities shown are for informational purposes only and the OWNER and the ENGINEER do not imply that the information is complete.

The CONTRACTOR shall be entirely responsible for all injuries to water pipes, electric conduits, existing drains or sewers, poles carrying currents, telephone or telegraph lines, railroad bridges and tracks, streets, pavements, sidewalks, curbs, fences, field tiles, sump pump drain lines, culverts, buildings, trees larger than six (6) inches in diameter, or other structures of any kind met with during the prosecution of the work, whether on public or private property.

Unless written approval or at a minimum, the land owner tells the ENGINEER's Resident Project Representative (RPR) in person that a fence may be cut, no fence shall be cut. If the land owner gives approval, the date, time, location, name of the land owner, and all parties present at the time of the approval must be recorded in the RPR's daily diary. Otherwise, no fences are to be cut. If approval is obtained, the fence MUST be repaired by the end of the working day.

All such structures or utilities which are damaged or removed to allow construction shall be restored to a condition at least equivalent to that which existed at the commencement of the work unless additional written arrangements are made satisfactory to the owner of said property. The CONTRACTOR shall care for and maintain all such structures or utilities encountered, and where service by them is interrupted, they shall provide and maintain temporary service until repair is complete and full service is restored. Repair of and restoration of service from essential structures or utilities shall be prompt; in these cases, if repair is unnecessarily delayed or unsatisfactory in the judgment of the OWNER, the OWNER may have the repairs made and may deduct the cost thereof from payments due the CONTRACTOR. All costs associated with structures or utilities encountered, including removal, replacement, repair, temporary service, or complications to proposed work shall be incidental to the project and shall be performed without any increase in the Contract Price.

Any field drainage tiles, drainage ditches, or storm sewers interfered with by the construction of the improvement shall be rerouted around the improvement in such a way as to maintain the drainage of areas upstream and downstream of the improvements; any such work shall be approved by the OWNER and shall be done by the CONTRACTOR without any increase in the Contract Price. Agriculture field terraces shall only be bored, and will be paid for at the CONTRACTOR'S unit bid price for BORING WATER MAINS of the appropriate diameter. In the event a terrace is "accidentally" cut, either with a hoe or trencher, the terrace must be reshaped, compacted, and protected from

erosion within 72 hours after the terrace is cut. All work associated with a terrace that is "accidentally" cut shall be performed by the CONTRACTOR without any increase in the Contract Price.

Existing trees and shrubs within easements and rights-of-way shall be protected from damage, and when such trees or shrubs are in the way of construction, the OWNER may instruct the CONTRACTOR to prune branches interfering with the work, or remove and dispose of trees or shrubs, or transplant trees or shrubs out of the way of the construction and the Contract Price shall not be increased for the performance of such work.

The CONTRACTOR shall be liable for damage to trees and shrubs which were to have been protected as directed by the OWNER, unless such damages are determined by the OWNER to have been unavoidable, and moneys due the CONTRACTOR may be withheld to cover such damages.

14.04 WATER LINE DAMAGE

In addition to the discussion under Structures and Utilities Encountered, the following shall apply: If existing or proposed water lines or service lines are damaged or leak due to the CONTRACTOR's construction procedures, emergency temporary repairs shall be made immediately. The CONTRACTOR shall permanently repair the water lines or service lines within 24 hours of receiving verbal notice from the OWNER. If the CONTRACTOR does not perform the repairs within the required time period, the OWNER may perform the repair and bill the CONTRACTOR for actual costs for administration, labor, equipment and materials related to such repairs.

These criteria shall be in force seven (7) days per week, including holidays and shall extend through the construction period and the one (1) year guarantee period.

The CONTRACTOR shall discuss the location of all existing water service lines, well lines, etc., with the local property owners, perform test digs, etc., to satisfy themselves as to the location of these lines prior to bidding and/or construction, as damage and repair work to these lines are incidental to the Contract.

14.05 STANDARD SPECIFICATIONS

The Standard Water and Sewer Specifications referenced in these Specifications refer to the current edition of the Standard Specifications for Water and Sewer Main Construction in Illinois. In case of conflict with the Standard Specifications, these Technical Provisions shall govern. All work performed shall be in accordance with the standards of the State of Illinois Plumbing Code and all local codes.

14.06 RIGHTS-OF-WAY AND EASEMENTS

The OWNER has secured the necessary rights-of-way and/or easements necessary for the construction of the work. These documents are on file with the ENGINEER and may be

reviewed by all bidders prior to the bid date. All bidders are responsible for including in their bid, all costs associated with or caused by any easements or permits involved in the Project. The CONTRACTOR shall be furnished copies of these documents prior to construction so that they may contain their construction activities to the permissible areas listed in each easement.

The CONTRACTOR shall familiarize themselves with all requirements as to traffic flow, flagmen, maintenance of trench, advance warning signs, etc., as required. The CONTRACTOR shall execute and maintain in force, all bonds as required by any county or township entities.

There are no railroad crossings involved in this project.

The CONTRACTOR shall perform the work in accordance with the provisions of the various county, township and state permits.

The CONTRACTOR's attention is called to the fact that a small part of the water main construction will involve, private property and that all improvements such as drainage ditches, agriculture field terraces, plantings, culverts, active utilities, signs, outbuildings, and any other miscellaneous, privately and/or publicly owned, property shall be restored to a condition equal to or better than their existing state of repair. Should it become necessary that the CONTRACTOR relocate/remove any obstruction encountered throughout construction, they should consult with the RPR before proceeding.

If it becomes necessary that the CONTRACTOR proceed across/over property supporting a growing cash crop (example: corn, soybeans, and wheat), they should so advise the RPR, whereby the RPR shall note/record and make an assessment of the affected area (crop damage). When the CONTRACTOR follows the above instructions relative to reporting areas of crop damage, and adheres to other instructions by the RPR and also uses good judgment, it is, therefore, the intent that the OWNER shall reimburse the property owner/renter an equitable amount for damage done by the CONTRACTOR to growing cash crops. If, in the judgment of the ENGINEER and OWNER, the CONTRACTOR did occupy a greater area than necessary for their particular operation relative to crop damage and other construction efforts, the CONTRACTOR shall be held liable for the cost applicable to the excess area/damage caused by them. The same procedure, as for growing cash crops, shall be adhered to by the CONTRACTOR when it comes to ornamental trees, shrubs, flowers, fences, waterways, lawns, gardens, etc., relative to the need to affect, relocate, construct nearby, or transplant such item during the CONTRACTOR’s operations. The CONTRACTOR shall be responsible and liable for all damages and claims caused by their operations to shrubs, trees, flowers, lawns, fences, gardens, etc., unless directed by the ENGINEER with the exceptions of growing cash crops (i.e., orchards, soybeans, corn, wheat, alfalfa, etc.). No additional compensation will be allowed for the above beyond the contract unit prices for the specified items of work listed in the Bid Schedule.

14.07 EQUIPMENT AND PRODUCTS

Whenever equipment is identified on the Drawings or in the Specifications by reference to a specific manufacturer's name and/or trade names, it is intended merely to establish a standard, and any equipment of other manufacturers which will perform adequately the services imposed by the general design will be considered equally acceptable provided in the opinion of the ENGINEER, the function, material, and service is equal.

The ENGINEER reserves the right to require a statement from the manufacturer of any products or equipment that the specific products or equipment have been inspected and tested and conform to the Specifications.

For the purposes of standardization all of the equipment for a single system shall be furnished by a single manufacturer except as noted or approved by the ENGINEER (i.e., all flushing hydrants shall be the same type and from the same manufacturer). Fabricated assemblies shall be shipped in the largest convenient section permitted by carrier regulations, and adequately marked for proper assembly.

The CONTRACTOR shall be responsible for supplying spare equipment parts as provided in these Specifications and providing for the proper storage of same so that they are kept in operable condition.

The CONTRACTOR shall furnish for review complete equipment shop drawings in accordance with the General Conditions before installing any equipment. Drawings shall be provided by the equipment manufacturer and shall show all dimensions and details for correct installation of the equipment.

The CONTRACTOR shall review and approve/stamp all shop drawings for construction. Shop drawings submittals will not be accepted without these reviews. The CONTRACTOR has ultimate responsibility for all shop drawing review and approval, including sub-contractor submittals.

14.08 MANUFACTURER'S REPRESENTATIVES

The CONTRACTOR shall arrange for all equipment manufacturers to provide a factory trained, qualified service engineer to oversee or inspect the complete equipment installation to assure that it is installed in accordance with the manufacturer's recommendations, make adjustments necessary to place the system in trouble-free operation, oversee initial start-up of the equipment and instruct the operating personnel in the correct care and operation of the equipment furnished (see also Section 61.10). This shall not alleviate the CONTRACTOR's responsibility for a complete working system. Such a service shall be a part of the Contract Price and no additional compensation shall be allowed.

14.09 SOIL BORING DATA

There were no soil borings taken for this job. The OWNER makes no warranty as to the subsurface conditions over the area of the work. The CONTRACTOR expressly understands that they are fully responsible for reviewing the project area. The CONTRACTOR is responsible for employing methods compatible with the subsurface conditions as they find them and should make subsurface investigations of their own as they deem appropriate.

14.10 CLEANING UP

The CONTRACTOR'S attention is called to the General Conditions of these Specifications. It is imperative that the project sites be promptly maintained in a reasonably clean condition and that it not present any hazard or prolonged inconvenience to individual property owners or the public in general.

During construction the CONTRACTOR shall clean up as the work proceeds. The premises, easements, and rights-of-way shall be kept free of accumulations of waste materials and earth, rubbish and other debris resulting from the work. The CONTRACTOR shall backfill all trenches by the end of each working day before leaving the site.

If in the judgment of the OWNER the CONTRACTOR fails to keep the site clean as described herein above, the OWNER may halt the construction and/or construction payments until the site has been cleaned up to the satisfaction of the OWNER. The CONTRACTOR has five (5) working days from notification from the OWNER and/or ENGINEER that the clean up is unsatisfactory to remedy the situation. If after this period of time the clean up is still not satisfactory, the OWNER has the right to hire an outside agency to conduct the clean up in a timely manner and then costs shall be withheld from the final cleanup/seeding retainage funds.

At the completion of the project, the CONTRACTOR will remove all waste materials, rubbish and debris from and about the premises as well as all tools, scaffolding and surplus materials, and will leave the site clean and ready for occupancy by the OWNER. Pipe banding and other construction debris may not be left on top of or buried in the trench. The CONTRACTOR shall be liable for any damage caused due to construction debris left in, on or around the project. The CONTRACTOR will restore to their original conditions those portions of the site not designated for alteration by the Contract Documents.

Open burning of debris will not be permitted unless specifically authorized in writing by the OWNER, and then only following state, municipal or other local codes, ordinances, rules or regulations.

Payment for cleanup will be incidental to the project cost. To ensure that Final Cleanup/Seeding progresses in a timely manner, the OWNER shall withhold a sum equal

to five (5) percent of the CONTRACTOR'S Bid Price from the partial pay estimates until all final Cleanup/Seeding work is satisfactory. This Cleanup retainage is in addition to the standard overall project retainage and may be used by the OWNER to hire a local Contractor to complete any unsatisfactory work. Final Payment of the cleanup retainage will only be approved when the OWNER is satisfied with Final Cleanup/Seeding work.

14.11 PAYMENT FOR WATER USED

There will be no charge to the CONTRACTOR for water used by the CONTRACTOR to fill, flush, test, chlorinate, and place in service the water lines.

14.12 LOCATION OF THE WORK

Pipeline alignment and appurtenance locations shall be verified with the onsite RPR prior to the start of each day's construction. County/Township supervisors shall pre-approve valve and hydrant locations when installed on their respective right-of-ways. **Please note that pipeline alignment at bores, road crossings, etc. will be monitored very closely. Any misalignment that exceeds 7 degrees will not be permitted.**

14.13 COORDINATION WITH LOCAL ROADWAY OFFICIALS

It shall be the CONTRACTOR's responsibility to contact the local township roadway commissioners and county highway engineers to coordinate the installation of water mains, water main boring operations, etc., on public easement under their jurisdiction. It shall be the CONTRACTOR's responsibility to be aware of specific roadway permits for other site-specific conditions. The CONTRACTOR shall include in their bid all costs associated with special roadway repair requirements, traffic flow requirements, construction scheduling requirements, etc. Those costs shall include surface repair, temporary surface etc., including mud removal, gravel resurfacing, etc. Also all road weight limitations shall be complied with.

14.14 COORDINATION WITH LOCAL ELECTRICAL UTILITIES

The CONTRACTOR shall contact the local electric utilities prior to bidding and shall include in their Bid price all costs associated with providing complete electrical service(s) from the utilities for the project. The CONTRACTOR shall be solely and entirely responsible for coordination of any and all electrical work with the local utilities, sub-contractors, etc., and for providing all necessary materials and equipment required to produce complete and properly functioning systems. The CONTRACTOR shall also be responsible for all necessary temporary service(s), and removal of same. The CONTRACTOR shall bear all costs for the items described above, as well as all installation charges and monthly usage bills up to the time that the system(s) can be fully utilized by the OWNER. All work performed shall be in accordance with the standards of the National Electric Code, National Electric Safety Code, and all local codes.

14.15 COORDINATION WITH RESIDENT PROJECT REPRESENTATIVE

The CONTRACTOR shall notify the RPR of the proposed work schedule prior to each day. Any work accomplished without the RPR present due to improper notification, shall be re-done, re-exposed, etc., to the satisfaction of the RPR, and shall be incidental to the CONTRACT price.

14.16 CONTRACT RESPONSIBILITY

CONTRACTOR will be required to coordinate and schedule their activities with the Village of Maeystown (OWNER) and Fountain Water District in regards to locating their facilities, connecting to existing water mains, cutting & plugging water mains, and disruption of services to the customers of the OWNER and Fountain Water District.

14.17 NPDES PERMIT COMPLIANCE

The NPDES General Permit Number ILR10 for Construction Site Activities governs the erosion protection practices of this work. The OWNER will submit to the Illinois Environmental Protection Agency a Notice of Intent (NOI) prior to the start of construction. NPDES Permit Construction Site Activities governs the erosion protection practices of this work. The CONTRACTOR shall be responsible for implementation and maintenance of all erosion control measures necessary, at the unit prices for specific Temporary Erosion Control measures, where directed by the ENGINEER.

The CONTRACTOR shall become familiar with the NPDES Permit and associated Storm Water Pollution Prevention Plan (SWPPP) prior to submitting their bid. The NPDES Permit and SWPPP have been included as a part of the Contract Documents. The SWPPP shall serve only as a guide to follow for erosion control measures. The SWPPP is intended to be a dynamic document and, as such, will likely be modified throughout the construction process and will vary with construction methods used. The CONTRACTOR shall install all erosion controls as shown on the Drawings, discussed in the SWPPP, and as necessitated by field conditions. Prior to bidding, the CONTRACTOR shall notify the OWNER and ENGINEER of any changes in the SWPPP that will be required due to planned construction methods. The CONTRACTOR shall take care during construction to minimize the risk of soil erosion on the construction site. If, in the judgment of the OWNER or ENGINEER, the CONTRACTOR disturbs more land than is necessary for the associated work they shall install erosion control measures in that area in accordance with the SWPPP at no additional cost to the OWNER.

Intentionally Blank

CONCRETE
(Plain and Reinforcement)

Table of Contents

Section 21

PAGE

21.01 Portland Cement 21-1
21.02 Concrete Aggregates 21-1
21.03 Water 21-1
21.04 Reinforcement (Metal) 21-1
21.05 Material Storage 21-1
21.06 Concrete Quality 21-1
21.07 Strength of Concrete 21-2
21.08 Concrete Proportions and Consistency 21-3
21.09 Tests on Concrete 21-3
21.10 Preparation of Equipment and Place of Deposit 21-4
21.11 Mixing of Concrete 21-4
21.12 Conveying 21-4
21.13 Depositing 21-4
21.14 Curing 21-5
21.15 Cold Weather Requirements 21-5
21.16 Forms 21-6
21.17 Removal of Forms 21-6
21.18 Cleaning and Bending Reinforcement 21-6
21.19 Placing Reinforcement 21-6
21.20 Splices (Reinforcement) 21-6
21.21 Concrete Protection of Reinforcement 21-7
21.22 Construction Joints 21-7
21.23 Cleanup of Final Surfaces 21-7

Intentionally Blank

CONCRETE
(Plain and Reinforcement)

Section 21

21.01 PORTLAND CEMENT

Portland cement shall comply with the Standard Specification for Portland Cement, ASTM C150, or Standard Specification for Air-Entraining Portland Cement, ASTM C175 and shall be Type I or IA.

21.02 CONCRETE AGGREGATES

Concrete aggregates shall conform to Specifications for Concrete Aggregates, ASTM C33, except that aggregates failing to meet these Specifications but which have been shown by special test or actual service to produce concrete of the required quality, may be used under Paragraph 21.08 of this section where authorized by the ENGINEER.

21.03 WATER

Water used in mixing concrete shall be clean and free from deleterious amounts of acids, alkalis, or organic materials.

21.04 REINFORCEMENT (METAL)

Reinforcing bars shall conform to the requirements of Standard Specification for Deformed and Plain Carbon-Steel Bars for Concrete Reinforcement, ASTM-A-615/615M, or Standard Specification for Rail-Steel and Axle-Steel Deformed Bars for Concrete Reinforcement, ASTM A996/A996M.

Welded wire fabric or cold-drawn wire for concrete reinforcement shall conform to the requirements of Standard Specification for Carbon-Steel Wire and Welded Wire Reinforcement, Plain and Deformed, for Concrete, ASTM A1064/A1064M.

21.05 MATERIAL STORAGE

Cement, aggregates and reinforcement shall be stored at the batch plant or work site in such a manner as to prevent deterioration or intrusion of foreign matter. Any material which has deteriorated or which has been damaged shall not be used for concrete.

21.06 CONCRETE QUALITY

The allowable stresses for design are based on the specified minimum 28-day compressive strength of the concrete or on the specified minimum compressive strength at the earlier age at which the concrete may be expected to receive its full load. The strength of concrete at specified ages for which all parts of the structure were designed are

shown on the Drawings. Where not specified in the Drawings, minimum 28-day compressive strength of the concrete shall be 3500 psi.

21.07 STRENGTH OF CONCRETE

The determination of the proportions of cement, aggregate and water to attain the required strength shall be made by one of the following methods:

Method I: When no preliminary tests of the materials to be used are made, the water content per sack of cement shall not exceed the values in the following table. Method II shall be employed when artificial aggregates or admixtures are used.

Assumed Strength of Concrete Mixtures

Water Content in U.S. Gals. per Sack of Cement	Assumed Compressive Strength at 28-day psi
7-3/4	2500
6-3/4	3000
6	3500
5-1/2	3750

NOTE: In interpreting this table, surface water contained in the aggregate must be included as part of the mixing water in computing the water content.

Method II: Proportions of the materials and water content, other than those shown in the above table, may be used provided that the strength quality of the concrete proposed for use, shall be established by tests, which shall be made in advance of the beginning of operations, using the consistencies suitable for the work and in accordance with Standard Practice for Making and Curing Concrete Test Specimens in the Laboratory, ASTM C192/C192M, and with Standard Test Method for Compressive Strength of Cylindrical Concrete Specimens, ASTM C39/C39M.

A curve representing the relation between the water content and the average 28-day compressive strength, or earlier strength at which the concrete is to receive its full working load shall be established for a range or earlier strength at which the concrete is to receive its full working load shall be established for range of values including all the compressive strengths called for on the Drawings. The curve shall be established by at least three (3) points, each point representing average values from at least four (4) test specimens. Amount of water used in the concrete, as determined for a curve, shall correspond to a strength which is 15 percent greater than that called for on the Drawings. No substitutions shall be made in the materials used on the work without additional tests in accordance, herewith, to show that the quality of the concrete is satisfactory.

21.08 CONCRETE PROPORTIONS AND CONSISTENCY

The proportions of aggregate to cement for any concrete shall be such as to produce a mixture which will work readily into the corners and angles of the forms and around reinforcement with the methods of placing employed on the work but without permitting the material to segregate or excess free water to collect on the surface.

The combined aggregates shall be of such composition of size that when separated on the No. 4 sieve (fine aggregate) shall not be less than 30 percent or more than 50 percent of the total unless otherwise required by the ENGINEER.

The method of measuring concrete materials shall be such that the proper proportions can be accurately controlled and easily checked at anytime during the work. The received measurement shall be width rather than volume. Measurements of materials for ready-mixed concrete shall conform to the Standard Specification for Ready-Mixed Concrete, ASTM C94/C94M.

21.09 TESTS ON CONCRETE

The CONTRACTOR shall employ and furnish an independent, qualified, testing agency, suitable to the ENGINEER and OWNER, for the purposes of all required testing of materials, certification of proper concrete placement during pour and work accomplished. All test results shall be reported to the ENGINEER and the CONTRACTOR on the same day the tests are made.

Technicians representing the testing agency shall inspect the materials and manufacture of concrete and shall report their findings to the ENGINEER and the CONTRACTOR. When it appears that the material furnished or work performed by the CONTRACTOR fails to fulfill specification requirements, the technician shall direct the attention of the ENGINEER and the CONTRACTOR to such failure.

The technician shall not act as foreman or perform other duties for the CONTRACTOR. Work will be checked as it progresses, but failure to detect any defective work or materials shall not in any way prevent later rejection when such defect is discovered, nor shall it obligate the ENGINEER for final acceptance. Technicians are not authorized to revoke, alter, relax, enlarge, or release any requirement of the specifications nor to approve or accept any portion of the work.

During the progress of the work compression test specimens shall be made and cured in accordance with Standard Practice for Making and Curing Concrete Test Specimens in the Field, ASTM C31/C31M.

Not less than three (3) specimens shall be made for each test, nor less than one (1) test for each day's pour or for each 250 cubic yards of concrete of each class. Specimens shall be cured under laboratory conditions except that when, in the opinion of the ENGINEER,

there is a possibility of the surrounding air temperature falling below 40 degrees F the ENGINEER may require additional specimens to be cured under job conditions.

Specimens shall be tested in accordance with Standard Test Method for Compressive Strength of Cylindrical Concrete Specimens, ASTM C39/C39M. The standard age of test shall be 7-days and 28-days.

If the average strength of the laboratory control cylinders for any portion of the structure falls below the compressive strengths called for on the Drawings, the ENGINEER shall have the right to require conditions of temperature and moisture necessary to secure the required strength and may require tests in accordance with Standard Test Method for Obtaining and Testing Drilled Cores and Sawed Beams of Concretes, ASTM C42/C42M or order load tests to be made on the portions of structure so affected.

21.10 PREPARATION OF EQUIPMENT AND PLACE OF DEPOSIT

Before placing concrete, all equipment for mixing and transporting the concrete shall be cleaned, all debris or ice shall be removed from the places to be occupied by the concrete. Forms shall be thoroughly wetted (except in freezing weather) or oiled and masonry filler units that will be in contact with concrete shall be well drenched (except in freezing weather) and the reinforcement shall be thoroughly cleaned of ice or other coatings.

21.11 MIXING OF CONCRETE

The concrete shall be mixed until there is a uniform distribution of the materials and shall be discharged completely before the mixer is recharged.

For job mix concrete, the mixer shall be rotated at a speed recommended by the manufacturer and mixing shall be continued for at least one (1) minute after all materials are in the mixer.

Ready-mixed concrete shall be mixed and delivered in accordance with the requirements set forth in the Standard Specification for Ready-Mixed Concrete, ASTM C94/C94M.

21.12 CONVEYING

Concrete shall be conveyed from the mixer to the place of final deposit by methods which will prevent the separation or loss of the materials.

Equipment for chuting, pumping and pneumatically conveying concrete shall be of such size and design as to insure a practically continuous flow of concrete at the delivery end without separation of the materials.

21.13 DEPOSITING

Concrete shall be deposited as nearly as practicable in its final position to avoid

segregation due to re-handling or flowing. The concreting shall be carried on at such a rate that the concrete is at all times plastic and flows readily into the space between the bars. No concrete that has partially hardened or been contaminated by foreign material shall be deposited on the work, or shall re-tempered concrete be used.

When concreting is once started, it shall be carried on as a continuous operation until the placing of the panel or level. When construction joints are necessary, they shall be made in accordance with Paragraph 21.22, this section.

All concrete shall be thoroughly compacted by suitable means during the operation of placing. Whenever practical the concrete shall be compacted with an internal mechanical vibrator of such construction that 4500 cycles per minute shall be transmitted to the concrete. The CONTRACTOR shall have, on the job site, a sufficient number of vibrators to insure that compaction can be started immediately after the concrete has been deposited in the forms.

The concrete shall be thoroughly worked around the reinforcement and embedded fixtures and into the corners of the forms.

Where conditions make compacting difficult or where the reinforcement is congested, batches of mortar containing the same proportions of cement to sand; as used in the concrete, shall first be deposited in the forms.

21.14 CURING

Provisions shall be made for maintaining concrete in a moist condition for at least five (5) days after the placement of the concrete. Curing may be obtained by any one of the approved "Methods of Curing" subject to approval of the ENGINEER.

No structures, structural members, or other appurtenances shall be placed upon any foundation concrete for a minimum of seven (7) days after the foundation pour is completed, and the seven (7) day cylinder test results have been reported to the ENGINEER.

21.15 COLD WEATHER REQUIREMENTS

Adequate equipment shall be provided for heating the concrete materials and protecting the concrete during freezing or near-freezing weather. No frozen materials containing ice shall be used.

All concrete material and all reinforcement, forms, fillers, and ground with which the concrete is to come in contact shall be free from frost. Whenever the temperature of the surrounding air is below 40 degrees F, all concrete placed in the forms shall have a temperature of between 50 degrees F and 70 degrees F and adequate means shall be provided for maintaining a temperature of not less than 70 degrees F for three (3) days or 50 degrees F for five (5) days. The housing, covering or other protection used in

connection with the curing shall remain in place and intact at least 24 hours after the artificial heating is discontinued. Salt or other chemicals shall not be used to prevent freezing.

If the temperature of the surrounding air is less than 50 degrees F, the CONTRACTOR shall use a temperature recording device to record the temperature to prove the temperature was not less than 70 degrees F for 3 days or 50 degrees F for 5 days and provide a means to visually check the air temperature under the insulating blanket. The method for cold weather pouring and curing shall be approved by the ENGINEER and OWNER prior to concrete placement.

21.16 FORMS

Forms shall conform to the shape, lines and dimensions of the members, as shown on the Drawings, and shall be substantial and sufficiently tight to prevent leakage of mortar.

They shall be properly braced or tied together so as to maintain position and shape.

21.17 REMOVAL OF FORMS

Forms shall be removed in such a manner as to insure the complete safety of the structure. In no case shall the supporting forms or shoring be removed until the members have acquired sufficient strength to support safely their weight and the load thereon. In addition, forms shall remain in place a **minimum of 24 hours** after the end of the concrete pour.

21.18 CLEANING AND BENDING REINFORCEMENT

Metal reinforcement, at the time concrete is placed, shall be free from all rust, scale or other coatings that will destroy or reduce the bond.

Bends for stirrups and ties shall be made around a pin having a diameter not less than two (2) times the minimum thickness of the bar. Bends for other bars shall be made around a pin having a diameter not less than six (6) times the minimum thickness of the bar, except that for bars larger than one (1) inch, the pin shall be not less than eight (8) times the minimum thickness of the bar. All bars shall be bent cold.

21.19 PLACING REINFORCEMENT

Metal reinforcement shall be accurately placed in accordance with the Drawings and shall be adequately secured in position by concrete or metal chairs and spacers.

21.20 SPLICES (REINFORCEMENT)

In general, splices in area of critical stress shall be avoided. Splices shall provide

sufficient lap to transfer the stress between bars by bond and shear.

21.21 CONCRETE PROTECTION OF REINFORCEMENT

The reinforcement shall be protected by the thickness of concrete as shown on the Drawings. Where not otherwise shown, the thickness of concrete over the reinforcement shall be as follows:

A. Where concrete is deposited against the ground without the use of forms, not less than three (3) inches.

B. Where concrete is exposed to the weather, or exposed to the ground, but placed in forms, not less than two (2) inches for bars more than five-eights (5/8) inches in diameter and one and one-half (1-1/2) inches for bars five-eights (5/8) inches or less in diameter.

C. In slabs and walls not exposed to the ground or to the weather, not less than three-quarter (3/4) inch.

D. In beams, girders and columns not exposed to the ground or to the weather, not less than one and one-half (1-1/2) inches.

In all cases the thickness of concrete over the reinforcement shall be in accordance with ACI 318, latest revision. Exposed reinforcement bars intended for future use shall be protected from corrosion by concrete or other adequate coverings.

21.22 CONSTRUCTION JOINTS

Joints not indicated on the Drawings shall be so made and located as to not impair the strength of the structure. Where a joint is to be made, the surface of the concrete shall be thoroughly cleaned. In addition, vertical joints shall be thoroughly wetted and coated with a neat cement grout immediately before placing new concrete.

When deemed appropriate by the ENGINEER, the CONTRACTOR will dowel construction joints. The ENGINEER will specify the size, location, and placement.

21.23 CLEANUP OF FINAL SURFACES

The surface of the concrete shall be free of spalling and holes. The CONTRACTOR shall be responsible for filling in the holes with a method and materials approved by the ENGINEER and OWNER. Any mortar that leaks through or around a form shall be mechanically removed to provide a smooth surface matching the surround concrete surface.

Intentionally Blank

SURFACE REPLACEMENT AND SITE WORK

Table of Contents

Section 31

PAGE

31.01 Scope of Work 1

31.02 Right-Of-Way Clearing 1

31.03 Earthwork 1

31.04 Paving and Surfacing 11

31.05 Site Improvements 12

31.06 Landscaping 13

31.07 Fencing 17

31.08 Demolition, Salvage, and Abandonment 17

31.09 Erosion Controls 18

31.10 Rock Excavation 21

31.11 Unsuitable Backfill Material 22

31.12 Miscellaneous Environmental Conditions 23

Intentionally Blank

SURFACE REPLACEMENT AND SITE WORK

Section 31

31.01 SCOPE OF WORK

Surface restoration shall be as specified in Section 21 of the Standard Water and Sewer Specifications. All surfaces shall be restored to at least the original condition prior to construction. All areas that are disturbed shall be final graded, fertilized, and seeded as specified (Section 31.06.B Permanent Seeding), and shall be incidental to the total Contract Price.

During construction the CONTRACTOR shall clean up as the work proceeds. The premises shall be kept free of accumulations of waste materials and earth, rubbish and other debris resulting from the work. The CONTRACTOR shall backfill all trenches by the end of each working day before leaving the site. If in the judgment of the OWNER the CONTRACTOR fails to keep the site clean as described hereinabove, the OWNER may halt the construction and/or construction payments until the site has been cleaned up to the satisfaction of the OWNER.

At the completion of the project, the CONTRACTOR will remove all waste materials, rubbish, and debris from and about the premises as well as all tools and surplus materials, and will leave the site clean and ready for occupancy by the OWNER. The CONTRACTOR will restore to their original conditions those portions of the site not designated for alteration by the Contract Documents.

Open burning of debris will not be permitted unless specifically authorized in writing by the OWNER, and then only following state, municipal or other local codes, ordinances, rules or regulations.

The CONTRACTOR shall be responsible for obtaining all material storage locations, for any vandalism, damage, that may occur and for clean-up at said sites.

31.02 RIGHT-OF-WAY CLEARING

There is no right-of-way clearing anticipated on this job.

31.03 EARTHWORK

A. Site Excavation

1. General - Excavation shall be done to the lines and slopes shown on the Drawings. Unstable or unsuitable materials shall be removed and replaced with approved material if, in the opinion of the ENGINEER, it would be a

detriment to the excavation. The CONTRACTOR will be allowed a negotiated compensation for removal and replacement of unsuitable existing earth materials below natural topsoil. The quantity for this work shall be as determined by the ENGINEER; in determining the pay quantity for this work, natural topsoil shall be considered as 12 inches thick and no additional compensation will be allowed for removal of topsoil. Unstable or unsuitable material shall be disposed of by the CONTRACTOR.

2. Topsoil Excavation - The CONTRACTOR shall remove topsoil and soil with a high organic content from the area of immediate construction and shall stockpile it on the site for use in finish grading in accordance with Section 31.03.G.

3. Borrow Excavation - Any soil in addition to that excavated at the site required to complete fill area shall be furnished by the CONTRACTOR at their expense. Borrow excavation shall not be placed in fills until the material is approved by the ENGINEER. See Section 31.03.B Earth Fill.

4. Waste - Any excess excavated material shall be removed from the site by the CONTRACTOR, or if permitted by the ENGINEER, wasted on the site. Areas of wasted soil shall be compacted in accordance with Section 31.03.B.4 and finish graded in accordance with Section 31.03.G.

5. Dewatering - The CONTRACTOR shall have on hand at the site at all times, the necessary pumps, hoses, and other accessories necessary for keeping the excavations dewatered.

   If well pointing or the installation of temporary drains is required to complete the work, they shall be provided by the CONTRACTOR.

   No additional compensation shall be made to the CONTRACTOR for any dewatering techniques, equipment or labor.

B. Earth Fill

1. General - This work shall consist of the construction of fills by the placement and compaction of specified or suitable materials above the natural ground or other surface.

2. Subgrade Preparation - The area upon which a fill is to be placed shall be prepared by removing all topsoil containing roots, vegetation and other deleterious materials. The surfaces of each portion of the foundation, immediately prior to placing the earth fill, shall have all water removed from depressions and shall be properly moistened and sufficiently clean to obtain a suitable bond with the earth fill. When directed by the ENGINEER, the

subgrade shall be benched where fill is to be placed on a slope.

No material shall be placed in any section of the earth fill until the foundation for that section has been dewatered and suitably prepared and has been approved by the ENGINEER. When the existing earth foundation materials are determined by the ENGINEER to be suitable, the area shall subsequently be disked or otherwise scarified to a depth of at least six (6) inches and recompacted in accordance with Section 31.03.B.4 so as to assure compaction, bonding with successive lifts, and insure against a potential plane of seepage. If the existing earth foundation materials are determined by the ENGINEER to be unsuitable, the CONTRACTOR shall remove these materials and replace them with approved material as directed by the ENGINEER. The CONTRACTOR will be allowed compensation for such "Removal and Replacement of Existing Unsuitable Soils" in accordance with Section 31.03.A.1. Excessive moisture content shall not in itself form the basis for classifying a material as "unsuitable"; suitability shall be judge on the physical and chemical makeup of the material, i.e., any material which contains excessive moisture but would otherwise be suitable shall not be eligible for additional compensation.

3. Earth Fill Materials - The material for fill construction shall consist of soil which is free of roots, vegetation, frozen material, material with high organic content, and other deleterious materials. Materials determined by the ENGINEER to be unsuitable for earth fill shall be disposed of in accordance with Section 31.03.A.4. The ENGINEER shall determine which materials are suitable for earth fill and shall have the authority to designate where in the fill certain earth materials shall be placed even to the extent of locating the placement of individual loads.

4. Placing Earth Fills - To achieve uniform compaction, fill material should be deposited in horizontal lifts extending the entire width and length of the fill, as far as practical, having a thickness compatible with the equipment utilized. It is presumed the lift thickness shall not exceed eight (8) inches in loose condition unless demonstrated by the CONTRACTOR to the satisfaction of the ENGINEER that the stated compaction can be uniformly achieved with a greater thickness. Lifts shall be disked to thoroughly mix and blend the different soils or to obtain uniform moisture content.

   The moisture content of the soil, when placed, shall be within ±3% of the optimum moisture content of the material except as otherwise approved by the ENGINEER and shall be compacted to a density no less than 90% of the maximum dry density at optimum moisture content as determined by Standard Test Methods for Laboratory Compaction Characteristics of Soil Using Standard Effort, ASTM D698. The density of the compacted fill shall be determined by an independent testing agency at regular intervals; "regular

intervals" is a variable and shall be as determined by the ENGINEER for each specific fill site, depending upon the site and method of the fill operation and the degree of difficulty expected in obtaining compaction. The services, testing, and reports of the independent testing agency shall be furnished by the CONTRACTOR to the ENGINEER incidental to the cost of the contract.

If the natural water content of the fill material does not fall within the range previously described, the CONTRACTOR shall mix, dry or moisten as necessary to achieve the specified moisture content.

The CONTRACTOR shall maintain the fill in an approved manner until the final completion and acceptance of all the work under the contract.

5. Earth Fill Equipment - During all earth fill operation, the CONTRACTOR shall have at the site the following pieces of equipment:

    a. Disk Harrow of the tandem type.

    b. Sheep's Foot Roller having a minimum weight of 4,000 lbs per foot of roller length when fully loaded.

    c. Hand Tamper of either the pneumatic or mechanical variety. All earth fill equipment shall meet the approval of the ENGINEER.

6. Hand Compaction - Fill inaccessible to compaction equipment adjacent to pipes or structures shall be compacted by hand. The soil shall meet the requirements under Section 31.03.B.3 and shall have a moisture content, when thoroughly mixed, corresponding to that specified under Section 31.03.B.4.

    The soil shall be deposited in lifts not to exceed four (4) inches loose measure and thoroughly compacted over the entire lift area with a pneumatic or mechanical tamping hammer. Special precautions shall be taken to achieve the compaction required without damage to the pipe or structure. Tamping equipment shall be subject to approval by the ENGINEER.

7. Earthen Water Retaining Structures - The CONTRACTOR shall construct stable, non-eroding, homogeneous, impervious earthen water retaining structures as shown on the Drawings.

    The distribution and gradation of the materials throughout the earth fill shall be such that the fill will be free from lenses, pockets, streaks, or layers of material differing substantially in texture or gradation from the surrounding material. The combined excavation and placing operation shall be such that the materials when compacted in the earth fill will be blended sufficiently to secure the best practicable degree of compaction and stability. Successive

loads of material shall be dumped on the earth fill so as to produce the best practicable distribution of the material, subject to the approval of the ENGINEER, and for this purpose the ENGINEER may designate the locations in the earth fill where the individual loads shall be deposited. The most impervious materials shall be placed in the central portion of the earth fill and the most pervious materials shall be placed so that the permeability of the fill will be gradually increased toward the side slopes of the earth fill.

Soils, as classified in accordance with the Unified Soil Classification System, which are considered suitable for earthen water retaining structures, are ML, MH, CL, and CH soils. Material will be judged to satisfy the impermeability requirements of the earthen water retention structures if, in the judgment of the ENGINEER, these soils will result in an earth fill which is equivalent to a minimum five (5) feet thick clay seal having a coefficient of permeability, K, of 1×10^{-6} centimeters per second.

Cobbles and rock fragments having maximum dimensions of more than five (5) inches shall not be placed in the earth fill. Should cobbles and rock fragments of such size be found in otherwise approved earth fill materials, they shall be removed by the CONTRACTOR either at the site of excavation or after being transported to the earth fill, but before the materials in the earth fill are rolled and compacted. Such cobbles and rock fragments shall be wasted as approved by the ENGINEER.

When the existing earth materials at finish grade are determined by the ENGINEER to be suitable, the CONTRACTOR shall compact these materials to a depth of six (6) inches in accordance with Section 31.03.B.4. If the existing materials at finish grade are found by the ENGINEER to be unsuitable for the impervious structure, the CONTRACTOR shall remove these materials and replace with suitable materials approved by the ENGINEER. Additional compensation shall be made to the CONTRACTOR for removing and disposing of existing unsuitable materials and replacing them with approved materials in accordance with Section 31.03.A.1.

Earthen water retaining structures shall be finish graded in accordance with Section 31.03.G.

C. Backfill

1. General - This work shall consist of the construction of fills by the placement and compaction of select materials where located on the Drawings or specified herein with material previously excavated from the site or its equivalent.

2. Backfill Material - Except for specific fill materials (e.g., filter media fill); backfill materials shall be material previously excavated from the site, or

equivalent material, which can be compacted to the specified densities. Soft or organic soils will not be acceptable material for backfill. All backfill material shall be free from lumps, clods, stones greater than the specified size, or frozen material. All material shall be from an approved source.

Coarse aggregate specified in the following paragraphs shall consist of tough, durable particles, reasonably free from objectionable material. Fine aggregate shall be reasonably free from an excess of soft and unsound particles and other objectionable matter.

All material used, regardless of the source of supply, shall meet the gradation limits specified. The gradation of material from any one source shall be reasonably parallel to the gradation specified and shall not be subject to the extreme percentages of gradation represented by the tolerance limits for the various sieve sizes.

Prior to ordering any select backfill materials, the CONTRACTOR shall furnish the ENGINEER written verification from an independent testing laboratory stating the material to be used is in compliance with these Specifications.

3. Drainage Granular Backfill - This shall be gravel, crushed gravel, pit run gravel, or crushed stone and shall conform to the following gradation requirements:

Sieve Size	Percent Passing
3/4"	100
1/2"	97±3
3/8"	80±10
No. 4	35±15
No. 16	3±3

4. Structural Granular Backfill (Types I and II) - Type I structural granular backfill, not less than four (4) inches in compacted thickness, shall be used under concrete slabs and shall be gravel or crushed stone, conforming to the following requirements:

   a. Sodium Sulfate, Soundness of Aggregates, ASTM C88, maximum percent loss - 20%

   b. Los Angeles Abrasion Test, ASTM C131, maximum percent loss - 40%

   c. Materials Finer than No. 200 Sieve, ASTM C117, maximum percent - 2.5%

d. Deleterious Materials –

(1) Shale, maximum percent - 4%
(2) Clay, lumps, maximum percent - 0.5%
(3) Soft and unsound fragments, maximum percent - 8%
(4) Total deleterious material, maximum percent - 10%

e. Gradation -

Sieve Size	Percent Passing
1-1/2"	100
1”	95±5
1/2”	45±15
No. 4	5±5

Type II structural granular backfill for use around structures or for filling deep areas beneath structures shall be stone, stone sand, stone screen, chat, wet bottom boiler slag, or slag sand. It shall be reasonably free from an excess of soft and unsound particles, shale, clay, etc., and shall conform to the following quality requirements:

a. Sodium Sulfate, Soundness of Aggregates, ASTM C88, maximum percent loss - 20%

b. Materials Finer than No. 200 Sieve, ASTM C117, maximum percent - 10%

c. Gradation -

Sieve Size	Percent Passing
No. 4	92±8
No. 100	10±10
No. 200	5±5

5. Compaction - Granular materials shall be compacted by vibratory compactors of sufficient capacity to obtain the specified degree of compaction. Vibratory compactors will not be acceptable for compaction of cohesive soils. No compaction by water soaking will be permitted unless authorized by the ENGINEER.

Special care shall be taken in backfill adjacent to waterproofing or foundation

walls to avoid damage to the waterproofing. Pipes and drains entering and leaving the structure shall be protected from settlement.

All backfill shall be compacted according to the following classifications:

a. Class A Compaction: Class A compaction shall consist of compacting the material to a density no less than 95% of the maximum dry density at optimum moisture content as determined by Standard Test Methods for Laboratory Compaction Characteristics of Soil Using Standard Effort, ASTM D698. Class A compaction shall be used for all drainage granular backfill, structural granular backfill, and all other backfill except under lawn areas. Material shall be placed in lifts of such thickness that uniform compaction of the degree specified above will be obtained.

b. Class B Compaction: Class B compaction shall consist of compacting the material to a density not less than 85% of the maximum dry density at optimum moisture content as determined by ASTM D698. Class B compaction shall be used for all backfill under lawn areas. Material shall be placed in lifts of such thickness that uniform compaction for the degree specified above will be obtained.

D. Trenching and Trench Backfill

Trenching, laying pipe and trench backfill shall be done as specified in Section 41.

E. Structural Excavation and Backfill

1. Structural Excavation - All footing shall be founded on firm undisturbed soil, and a six (6) inch minimum thickness of structural granular backfill shall be placed under all concrete bottom slabs of structures. Excavations shall be carried deep enough to permit the minimum thickness of granular material to be placed or until firm undisturbed soils are encountered, whichever requires greatest depth. For requirements for granular material, see Section 31.03.C.

In no case shall any footings be founded above those elevations shown on the Drawings. If soft or unsuitable soil is encountered at elevations where footings are to be founded, the ENGINEER may direct the CONTRACTOR to remove the unstable materials and bring the excavation to grade with fill concrete or structural granular backfill (see Section 31.03.C.). Additional compensation will be made to the CONTRACTOR for such removal and replacement work as described in Section 31.03.A.1.

Excavations carried below depths shown on the Drawings shall be brought to grade by the CONTRACTOR with fill concrete or structural granular backfill.

No additional compensation will be allowed for excavations carried below depth shown on the Drawings unless such excavations are ENGINEER approved "Removal and Replacement of Existing Unsuitable Soils" which will be compensated for in accordance with Section 31.03.A.1.

The excavation will be large enough to allow for installation and removal of forms. Side forms will not be required for footings or edges of base slabs below grade, provided the soil is stable and square corners and straight, plumb sides are maintained until concrete is placed and approval of the ENGINEER is obtained. All other excavation shall allow for placement and removal of forms and inspection.

Special care shall be taken not to disturb the bottom of excavations where the soil is to provide bearing for slabs, footing, etc. If the presence of subsurface water or other conditions, which may decrease the bearing strength of the foundation material, prevail then soil adequate to protect the foundation material shall not be excavated until just before reinforcing steel and concrete are to be placed. The bottom of all excavations shall be inspected and approved by the ENGINEER before the placement of any granular material, reinforcing steel, or concrete.

2. Shoring - The CONTRACTOR shall furnish, install and remove all shoring, bracing, sheet piling or other required work necessary to retain banks of excavation, prevent cave-in of adjacent ground, and support and prevent displacement of adjacent structures of piping. All shoring shall be maintained in good condition and removed when no longer required. The CONTRACTOR shall make good any injury or damage resulting from failure of the shoring system or from not observing these requirements.

3. Dewatering - The CONTRACTOR shall, at all times, during construction, provide and maintain ample means and devices with which to promptly remove and properly dispose of all water entering the excavation in a manner that will keep the excavation dry and foundation bearing areas undisturbed until the structure is complete and all backfill has been placed. No extra compensation for dewatering or drainage necessary to meet this specification will be allowed.

   Sumps, if used, shall be located outside of load bearing areas and at such distance that the bearing surfaces will not be damaged. Water containing silt in suspension shall not be pumped into any sewer lines or discharged to state waters.

4. Structural Backfill - No backfilling shall begin without the approval of the ENGINEER. Unless otherwise shown on the Drawings or specified herein, backfill shall be structural granular backfill except for structures on or in

earthen dikes, then backfill shall be Class A compacted, select excavated earthen materials.

All form work, rubbish, bracing, and sheeting shall be removed from the excavation before any backfill is placed. The placement of backfill around structures or walls shall be done simultaneously on opposite sides in even lifts. No backfill shall be placed behind any wall until the entire main structure of which that wall is a part is complete and until all concrete in the main structure has reached its specified 28-day strength, unless approved otherwise in writing by the ENGINEER. Small flow channels and other such appurtenances will not be considered as being part of the main structure. Sloping sides of the excavation which would be liable to cause wedging action shall be stepped or serrated. Under no circumstances shall backfill be placed in water.

Around all structures where adjacent finished grade is to be exposed to the weather, backfill shall be carried to two (2) feet six (6) inches below finished grade. A two (2) foot layer of clayey soil approved by the ENGINEER shall be placed over the full area of the excavated space outside the structure, compacted, and pitched to drain water away from the structure. The area shall then be finish graded in accordance with Section 212 of the Illinois Standard Specifications for Road and Bridge Construction, unless amended herein.

F. Roadway Grading

The grading of roadways or drives on the site shall be done in accordance with Section 212 of the Illinois Standard Specifications for Road and Bridge Construction, and shall be built to the lines and grades shown on the Drawings. No payment will be made for overhaul of any material to or from any source.

G. Finish Grading

The CONTRACTOR shall grade all areas to the finish grade elevation shown on the Drawings, or as directed by the ENGINEER. If the existing surface has become hardened or crusted, it shall be disked or raked so it will blend with the topsoil.

The CONTRACTOR shall place a six (6) inch layer of topsoil on all areas to be seeded. The top three (3) inches of topsoil shall be worked to break it up into particles no larger than two (2) inches. The surface shall then be alternately raked and rolled until the soil is friable and the grades are smooth and continuous.

All areas trenched between May 1 and December 31 shall be final graded by May 21 of the following year. All areas trenched between January 1 and April 30 shall be final graded by September 30 of the same year. Failure to meet these guidelines will result in Liquidated Damages being assessed against the CONTRACTOR, at

the established daily rate.

H. Soil Treatment

Soil treatment shall be applied to all areas beneath concrete floor slabs on grade or fill and along the interior and exterior sides of all foundation walls and grade beams as follows: two (2) gallons per five (5) lineal feet each side, inside and outside perimeter walls, two (2) gallons per square foot three (3) feet each side all construction joints and around all conduit, plumbing, duct work, etc., perforating floor slabs and one (1) gallon per 10 square feet of remainder of building. Soil treatment shall be applied after finished sub-grade and prior to the installation of rock fill and vapor barrier. Solutions shall be only water-based emulsion, uniform composition, and synthetic dye to permit visual identification of treated soil, of the generic chemical aldrin. Chemicals used in the soil treatment work shall not be in conflict with the latest local, state or federal regulation.

31.04 PAVING AND SURFACING

A. General

Construction of all paved surfaces shall be in accordance with the Illinois Standard Specifications for Road and Bridge Construction. In case of conflict with the Standard Specifications, these Specifications shall govern.

B. Roads, Drives and Parking Areas

1. General - Base courses and surface courses shall be constructed to the lines, grades and dimensions shown on the Drawings.

2. Base Course - The base course shall be aggregate base course, Type B, of the thickness shown on the Drawings, and shall be constructed in accordance with the Standard Specifications.

3. Aggregate Surface Course – The aggregate surface course shall be of the type and thickness shown on the Drawings, and shall be constructed in accordance with the Standard Specifications.

4. Bituminous Surface Treatment - Bituminous surface treatment shall be Class A-1, A-2, or A-3 as shown on the Drawings, and shall be constructed in accordance with the Standard Specifications.

5. Bituminous Concrete - Bituminous concrete binder and surface courses shall be Class I, and shall be constructed in accordance with the Standard Specifications.

6. Concrete Pavement - Concrete for concrete pavement shall be proportioned

and mixed as specified in Section 21 of these Specifications. Concrete pavement shall be constructed in accordance with the Standard Specifications.

7. Soil Stabilization Fabric - The CONTRACTOR shall furnish and install on the earth subgrade where shown on the Drawings, a nylon, polypropylene non-woven fabric to stabilize the ground surface beneath the base course aggregate as specified in Section 31.05.C.

C. Walks and Steps

Concrete for walks and steps shall be proportioned and mixed as specified in Section 21 of these Specifications. Concrete walks and steps shall be constructed in accordance with the Standard Specifications and the details shown on the Drawings.

Unless otherwise shown on the Drawings, concrete walks shall be four (4) feet wide. Walks shall be four (4) inches thick, except those at driveways which shall be six (6) inches thick. Walks shown on slopes 10:1 or steeper shall be constructed with steps conforming to the slope. The steps shall have a six (6) inch riser and a twelve (12) inch minimum tread.

31.05 SITE IMPROVEMENTS

A. Pipe Culverts

The CONTRACTOR shall furnish and install pipe culverts as shown on the Drawings in accordance with the Illinois Standard Specifications for Road and Bridge Construction. All pipe culverts shall be corrugated steel pipe of the gage required in the Standard Specifications.

Metal end sections shall be furnished and installed where required in accordance with the Standard Specifications.

B. Riprap

Riprap shall consist of clean stone or clean broken concrete. It shall be free of shale, shaly stone, and other imperfections. The majority of the riprap shall be sized between one and one-half (1-1/2) inches to six (6) inches. The largest stones shall not exceed six (6) to eight (8) inches.

Riprap shall be placed uniformly and all void spaces shall be filled with smaller stones. Riprap shall, at a minimum, be placed where shown on the Drawings and as directed by the ENGINEER. Riprap shall be installed as shown on the Drawings, except that when not shown on the Drawings, width and length requirements shall be a required for field conditions and installation methods but shall not be less than eight (8) feet wide by four (4) feet long.

C. Soil Stabilization Fabric

The CONTRACTOR shall furnish and install on the earth subgrade where shown on the Drawings, a nylon-polypropylene non-woven fabric to stabilize the ground surface. The fabric shall be Mirafi 500X as manufactured by Celanese Fibers Marketing Company, New York, N.Y.; Typar, Style 3401 by DuPont Company Explosives Products, Wilmington, Delaware, or equal.

Prior to placing the fabric, the subgrade shall be cleared of sharp objects which might damage the fabric. The fabric shall be unrolled directly on top of the earth subgrade. If overlapping is required to cover the area, the overlap shall be at least three (3) feet. Should the fabric be damaged during any step of installation, the torn or punctured section shall be covered by another piece of fabric cut large enough to cover the damaged area and meet the three (3) foot overlap requirement. At curves, intersections or other areas where fabric is overlapped, care shall be taken to spread the base course aggregate in the same direction as the fabric overlap. Metal tracked machinery shall not come in direct contact with the fabric.

31.06 LANDSCAPING

A. General

The CONTRACTOR shall be responsible for the repair of any damage to structures or equipment resulting from landscaping operations, and shall remove excess soil and other debris from the site before final acceptance of the project.

B. Permanent Seeding

The work shall consist of furnishing all labor, equipment, and materials for seeding a permanent grass mixture on all road ditches, structure sites, yards, permanent pasture, and all Crop Reduction Plan acreage within the work area limits which are disturbed during completion of work. The surfaces of earthen embankments shall also be seeded when necessary. Permanent seeding will only be performed during the following periods:

Fall:	August 1 - September 30
Spring:	March 1 - May 21

1. Fertilizer - Immediately prior to seeding preparation, fertilizer shall be placed over the areas to be seeded. The fertilizer shall be a complete commercial fertilizer of organic base containing, in available form by weight, six (6) percent Nitrogen, 12 percent Phosphorous, and 12 percent Potash. It shall be free flowing and suitable for application with approved equipment, delivered to the site in bags or other convenient containers, each fully labeled with the following:

a. Name and address of manufacturer.
b. Name brand or trademark.
c. Number of net pounds of ready mixed materials in the package.
d. Chemical composition of analysis.
e. Producer's guarantee of composition.

Fertilizer shall be evenly distributed with an approved mechanical spreader at a rate of 500 pounds per acre.

If a heavy or long rain (as judged by the ENGINEER) should fall on the plant site after fertilizer has been applied but before the seedbed has been prepared, the CONTRACTOR shall re-fertilize those areas affected, at no additional compensation.

2. Seedbed Preparation - All gullies and washes shall be filled to conform to the desired shape and the entire area to be seeded shall be reasonably smooth before actual seedbed preparation is begun. Stones larger than four (4) inches in diameter, sticks, stumps, and other debris will be removed. At this point, the required fertilizer shall be applied uniformly. Immediately after application of the fertilizer, the area to be seeded shall be finely pulverized to a minimum depth of three (3) inches, either by spading and raking or by plowing, discing, harrowing, or other methods approved by the ENGINEER. The CONTRACTOR shall suspend operations when the soil is too wet, too dry, frozen or otherwise untillable. Seeded areas shall not be compacted through their use for such purposes as access roads or parking areas after seedbed preparation is completed. If rain should pack the seedbed prior to seeding, it shall be prepared again at no additional compensation.

3. Seed - Seeding shall be done immediately after seedbed preparation. The seed shall be applied at a uniform rate over the entire area. Grass seed shall be fresh, clean, and new crop seed composed of the following varieties mixed in the proportion by weight as shown, and testing the minimum percentages of purity and germination indicated. All seed used shall be labeled in accordance with U.S. Department of Agriculture Rules and Regulations under the federal act in effect at the time of the installation of the work involved under seeding operations. All seed shall be furnished in sealed standard containers. Seed may be mixed by dealer or by an approved method on the site. Weed seed shall not exceed .35% by weight of the total amount supplied. If seed is mixed on the site, dealer's guaranteed analysis for each variety must be furnished. Individual varieties must be delivered in separate unopened original containers should the CONTRACTOR desire to mix the seed on the site.

The mixture of grass seed used for seeding areas flatter than 3:1 slopes shall consist of the following proportions by weight per acre:

Name	Lbs per Acre	Percent Purity	Percent Germination
Turf Type Fescue	75	98	85
Perennial Ryegrass	20	98	90

Areas with slopes 3:1 or steeper shall have an additional seeding of the following kind and quantity of seed:

Name	Lbs per Acre	Percent Purity	Percent Germination
Perennial Ryegrass	30	98	90

The mixture of grass seed used for seeding the inside area of the earthen water retaining structures shall consist of the following proportions by weight per acre:

Name	Lbs per acre	Percent Purity	Percent Germination
Reed Canary Grass	15	98	90
Tall Fescue	15	98	90

4. Seeding Materials - No seed shall be sown during high winds or when the ground is not in proper condition for seeding (as judged by the ENGINEER). The ENGINEER shall examine and approve any equipment to be used. Prior to starting work, seeders shall be calibrated and adjusted to sow seeds at the proper seeding rate. The ENGINEER shall be notified 48 hours prior to beginning the seeding operations so the trial seeding runs can be made to insure the proper seeder calibration.

   Within 12 hours after seeding, the area shall be rolled at right angles to the runoff with an approved type roller or cultipacker to compact the seedbed and place the seed in contact with the soil.

5. Mulching - Immediately after rolling of the seedbed, mulch shall be applied to all the earthen embankments, road ditches, drainage swales and any slopes of 3:1 or steeper. Mulching will not be required on the remaining areas of the site. Mulch shall be straw of wheat, rye, oats, or other approved stalks and shall be air dried. Hay will not be permitted. Mulch shall be hand or machine applied in a loose enough layers to permit air to circulate but compact enough to reduce erosion. If baled mulch is used, care shall be taken that the material is in a loosened condition and contains no lumps or knots of compacted material.

6. Watering - Immediately after the seeding operation is complete, the CONTRACTOR shall maintain a daily sprinkling schedule of several hours

until such time as the seed commences to grow. Sprinklers approved by the ENGINEER will be used. Dosing with open ended or nozzled hoses will not be permitted. Any potable water from the distribution system used by the CONTRACTOR must be paid for by the CONTRACTOR at the price stated in these Specifications.

7. Reseeding and Maintenance - Seeding operations shall be repeated until a satisfactory uniform stand of grass is secured. Damage resulting from erosion, gulleys, washouts, or other causes shall be repaired by filling with topsoil, tamping, re-fertilizing and reseeding by the CONTRACTOR at no additional compensation. The CONTRACTOR shall mow and maintain all seeded areas until final acceptance of the project.

8. CRP Seeding - The CONTRACTOR shall contact the local SCS office and receive approval of grass seed and fertilizer mixtures prior to placing any seed or fertilizer on any CRP land.

C. Planting

1. General - Planting shall be as specified in the Illinois Standard Specifications for Road and Bridge Construction except as amended herein. In case of conflict with the Standard Specifications, these Specifications shall govern.

2. Fertilizing - Fertilizing shall conform to the Standard Specifications, and shall contain six (6) percent Nitrogen, 12 percent Phosphorous, and 12 percent Potash by weight.

3. Planting Materials - Materials used for planting trees shall be as follows:

    a. Bracing - Materials used for staking, bracing, or guying shall conform to the Standard Specifications except as amended herein. Buying and staking trees shall be done as directed by the ENGINEER.

    b. Hose - Hose, if used, shall be two-ply fiber-bearing garden hose, not less than one-half (½) inch inside diameter.

    c. Wrapping Material - Wrapping material shall be first quality, heavy waterproof crepe paper manufactured for tree wrapping.

    d. Mulch - Mulch shall be wood chips or ground bark.

4. Pruning - Each tree and shrub shall be pruned in accordance with AAN Standards of the Standard Specifications.

5. Maintenance - Plant care shall be in accordance with the Standard Specifications and as specified herein. The CONTRACTOR shall be responsible for maintenance of each plant immediately after planting until final acceptance of the Project.

31.07 FENCING

Intentionally Blank – There is no fencing on this project.

31.08 DEMOLITION, SALVAGE, AND ABANDONMENT

This work shall consist of the removal and satisfactory disposal of existing structures or portions thereof, as shown on the Drawings and specified herein. Removal operations, whether complete or partial, shall be conducted with the least interference to the water treatment and/or water distribution process, and shall not be started until permitted by the ENGINEER. The CONTRACTOR's attention is directed to Section14.03.

Materials that are to be salvaged shall be carefully inventoried, removed, and stockpiled on the site where designated by the ENGINEER. If the CONTRACTOR damages or destroys such material, they shall restore or replace it without additional compensation.

Piping, valves, and other miscellaneous items may be reused if specifically and individually approved by the ENGINEER. Items for reuse shall be cleaned, painted and reconditioned as required by the ENGINEER.

Materials that are not to be salvaged and stockpiled shall become the property of the CONTRACTOR, and they shall remove and dispose of them away from the site. The salvage value of the material shall be considered in determining the Contract Price.

Except as otherwise specified, existing structures to be demolished shall be removed to at least one (1) foot below the proposed elevation shown for the subgrade or ground surface, and all portions below this elevation that interfere with construction, as determined by the ENGINEER, shall be removed.

When structures are to be partially removed, the CONTRACTOR shall be responsible for any damage done to the portions that are to remain. Old concrete or masonry shall be carefully removed by drilling, chipping, or other methods approved by the ENGINEER, leaving a surface that will permit a neat joint with new construction, or otherwise satisfactory for the purpose intended. Expansion structures shall be as shown on the Drawings. Where existing bars are to extend from the remaining portions of the existing structures into new construction, the concrete shall be removed, leaving the projecting bars clean and undamaged. Where projecting bars are not to extend into the new construction, they shall be cut off flush.

All broken concrete free of metal reinforcement from demolition may be disposed of as

riprap where called for on the Drawings.

All existing pipe that will no longer be used shall have the ends securely grouted and sealed with a lean concrete slurry for a distance of at least 10 feet from the ends of the pipe; or the pipe ends shall be properly capped.

31.09 EROSION CONTROLS

A. Erosion Protection

The NPDES General Permit Number ILR10 for Construction Site Activities governs the erosion protection practices of this work. The OWNER will submit to the Illinois Environmental Protection Agency a Notice of Intent (NOI) for the General Permit to Discharge Storm Water from Construction Site Activities. The CONTRACTOR shall be responsible for implementation and maintenance of all erosion control measures necessary, at the unit prices for specific Temporary Erosion Control measures, where directed by the ENGINEER.

The CONTRACTOR shall familiarize themselves with the NPDES Permit, the erosion control measures shown on the Drawings and the associated Storm Water Pollution Prevention Plan (SWPPP) prior to submitting their bid. In addition to the erosion control measures shown on the Drawings and the requirements of the NPDES Permit and the SWPPP, the CONTRACTOR shall exercise all precautions and take whatever measures necessary to prevent soil erosion. Earthwork operations shall be planned so that the exposure of bare soil is minimized, both as to extent and duration. The CONTRACTOR will be responsible for installing and maintaining the erosion control measures as specified in the SWPPP and as necessitated by field conditions and construction methods. Erosion control measures shall generally adhere to the SWPPP and this Section. Payment for the erosion control measures implemented will be at the CONTRACTOR'S unit bid prices as discussed below. However, maintenance of the erosion control measures, as required by the NPDES permit and outlined in the SWPPP will be incidental to the total Contract Price. If, in the judgment of the OWNER or ENGINEER, the CONTRACTOR disturbs more land than is necessary for the associated work, they shall install erosion control measures in that area in accordance with the SWPPP at no additional cost to the OWNER.

If, in the opinion of the OWNER or ENGINEER, excessive soil erosion is occurring due to construction methods or other factors that are controllable by the CONTRACTOR, the CONTRACTOR shall immediately remedy the problem under the ENGINEER'S direction. Remedial measures may include, but not be limited to the following: installation of straw bale drainage ditch checks, silt retention fences, construction of temporary sediment ponds, reseeding, intermediate mulching, regrading, and removal of earth stockpiles. In such instances, all remedial measures required to prevent soil erosion and the associated maintenance of such measures

shall be incidental to the total Contract Price.

B. Trench Stabilization

When slopes exhibit excessive erosion, and as directed by the ENGINEER or OWNER or as shown on the Drawings, and described in the SWPPP, erosion checks shall be installed at necessary intervals to prevent ditch washout.

Erosion checks shall be of the following types and payment will be as indicated:

1. Planks, eight (8) to 10 inches wide, shall be placed with two (2) to four (4) inches exposed. Planks shall be approximately three (3) feet wider than the trench or ditch and shall be staked into solid ground at both ends. A sufficient number of planks shall be supplied to serve as a sediment barrier for the entire width of the trench or ditch. The CONTRACTOR will be paid the unit bid price for each ditch check regardless of the number of planks needed.

2. Crushed gravel shall be placed in the top 15 inches of the trench for sufficient trench length to prevent washout and shall be paid for at the CONTRACTOR's unit bid price per lineal foot.

3. Riprap berm, six (6) inches in depth (sized and placed as described in Section 31.05.B), covering the entire slope.

4. Mulch, straw, hay bales, or some other material approved by the ENGINEER shall be spread along trench surface to provide protection for uncompacted earth, and shall be paid for at the CONTRACTOR's unit bid price per lineal foot.

5. Pre-manufactured Check Dams shall be installed perpendicular to the trench or ditch as per the manufacturer's recommendations; straw bales can be used in lieu of the pre-manufactured check dams. A sufficient number of check dams or bales shall be supplied to serve as a sediment barrier for the entire width of the trench or ditch. The CONTRACTOR will be paid the unit bid price for each ditch check regardless of the number of check dams or straw bales needed.

6. Temporary seeding of the trench lines (consisting of wheat seed spread at the rate of one (1) pound per 100 square feet, covered with either straw mulch or an erosion control blanket, continuous from the foot of the slope to its highest point) may be used to control erosion provided the temporary seeding activity corresponds with effective seeding/germination time periods. Erosion control blankets shall be constructed of 70% agricultural straw, 30% coconut fiber, encased between two natural fibers, biodegradable nets, installed per the manufacturer's recommendation. Erosion control blankets shall be North

American Green SC 150 BN, or equal. Straw mulch shall be spread uniformly over the entire length and width of the disturbed trench. Where additional temporary seeding is required due to slopes in pastures and/or timbers, the temporary seeding shall be paid for at the CONTRACTOR's unit bid price per lineal foot. Temporary seeding that is paid per lineal foot must be approved by the ENGINEER.

If erosion checks installed are not adequate, additional erosion checks shall be installed until the trench is stabilized. All NECESSARY erosion checks will be paid for as set forth in the CONTRACTOR's unit bid prices.

C. Slope Stabilization

Where slope stabilization cannot be maintained due to steepness of the grade and/or physical limitations encountered (flowing water at ditch crossing), erosion controls shall be installed as directed by the ENGINEER and/or as shown on the Drawings and described in the SWPPP:

1. Riprap berm, six (6) inches in depth (sized and placed as described in Section 31.05.B), covering the entire slope.

2. Temporary seeding of the trench lines (consisting of wheat seed spread at the rate of one (1) pound per 100 square feet, covered with either straw mulch or an erosion control blanket, continuous from the foot of the slope to its highest point) may be used to control erosion provided the temporary seeding activity corresponds with effective seeding/germination time periods. Erosion control blankets shall be constructed of 70% agricultural straw, 30% coconut fiber, encased between two natural fibers, biodegradable nets, installed per the manufacturer's recommendation. This blanket is to be used where riprap is not an option. Erosion control blankets shall be North American Green SC 150 BN, or equal. Straw mulch shall be spread uniformly over the entire length and width of the disturbed trench. Where additional temporary seeding is required due to slopes in pastures and/or timbers, the temporary seeding shall be paid for at the CONTRACTOR's unit bid price per lineal foot. Temporary seeding that is paid per lineal foot must be approved by the ENGINEER.

3. Dirt berms (a shallow dam of dirt, 18" ht x 24" width x 15' length) shall be placed at a 35 degree angle to the trench flow line to divert water from eroding the trench line and associated backfill.

4. Silt fence shall be installed as per the NRCS specifications and shall be placed along slopes as necessary to prevent loss of sediment.

If erosion checks installed are not adequate, additional erosion checks shall be installed until the slope is stabilized. All NECESSARY erosion checks will be paid

for as set forth in the CONTRACTOR's unit bid prices.

D. Perimeter Protection

Where required by the site and/or construction practices, and as shown on the Drawings and described in the SWPPP, perimeter protection measures shall be implemented to prevent the migration of sediment off site.

1. Silt fence shall be installed as per the NRCS specifications and shall be placed along slopes or the perimeter of the property as necessary to prevent loss of sediment. Silt fence shall be paid at the CONTRACTOR's unit bid price per lineal foot.

2. Temporary sediment basins shall be constructed as shown on the Drawings or as directed by the ENGINEER.

Additional erosion control practices may be used with prior approval from the ENGINEER and OWNER. Payment for additional erosion control practices will be negotiated as necessary. Maintenance of all erosion control structures must be in accordance with the NPDES permit and the SWPPP and is incidental to the Contract Price.

31.10 ROCK EXCAVATION

Rock excavation includes removal and disposal of rock material encountered that cannot be removed by conventional methods. Rock material includes boulders one-half (½) cubic yard or more in volume, and rock in beds, ledges, unstratified masses, and conglomerate deposits. When excavation of the rock material requires systematic use of pneumatic or hydraulic tools or a rock trencher, rock excavation shall be allowed under guidelines of this section of Specifications and Section 20-4 of the Standard Specifications for Water and Sewer Construction, and paid for at the rate specified in the Bid Schedule. Shale, boulders (less than one-half (½) cubic yard in size), sandstone, gravel, and similar rocky material that can be removed by conventional methods **WILL NOT** be considered as rock excavation nor allowed for payment. Where blasts are made, the excavation shall be covered with brush, timber, or matting to prevent danger to life and property, and the CONTRACTOR shall secure a special permit from the local governmental authorities for blasting when required. Care shall be taken not to damage adjacent structures, property, or site improvements; or weaken the bearing capacity of rock subgrade when using explosives. Before starting work in areas where rock excavation will be required, the existing condition of adjoining properties shall be verified. Photographs shall be taken to record any existing settlement or cracking of structures, pavements, and other improvements. A list of such damages shall be prepared, verified by dated videos and signed by the CONTRACTOR and others conducting the investigation.

For water main excavations, rock shall be excavated to a width of at least 12 inches more than the inside diameter for PVC pipe, for the entire depth of the excavation. Rock excavation for pipe will be at least eight (8) inches below the bottom of the pipe and at least three (5) inches below the bottom of the bell of a joint. Before the pipe is laid, the base of the excavation shall be replaced with a cushion of GRANULAR BACKFILL. All irregularities of the rock are to be filled with compacted granular backfill as well. In addition, "soft" rock (i.e., rock not allowed for payment as rock excavation, but that can be removed by conventional methods) shall be properly bedded with a cushion of GRANULAR BACKFILL, to avoid rough edges or other irregularities from damaging the water pipe.

The CONTRACTOR, on encountering rock via the trenching/open cut method, shall sufficiently uncover various spot locations to assure the overall extent of rock in that particular location. The CONTRACTOR, on encountering rock via the directional boring method, shall sufficiently prove the overall extent of rock in that particular location by either accurate records of the pressure at the bore head or uncovering spot locations as directed by the ENGINEER/OWNER. In either case, they shall immediately notify the ENGINEER/OWNER who either (1) will approve rock excavation in that area as necessary, or (2) will provide the CONTRACTOR with an alternate water line routing which could produce a location that eliminates the necessity of all/part of the rock excavation.

The CONTRACTOR must understand that if it is the ENGINEER's/OWNER's decision to relocate the water main to avoid the encountered rock, a reasonable time lapse to obtain alternate routing would be necessary. All direct costs involved in re-routing of the water line to a different location to avoid rock excavation will be borne by the OWNER.

It shall be the CONTRACTOR's responsibility to dispose of all excavated rock off site, to clean up debris, and to provide earthen or granular backfill to replace that rock material removed. This work is included in the unit price for ROCK EXCAVATION.

Rock excavation by the trenching/open cut method shall be paid for at the contract unit price per cubic yard determined by measuring the average length, width, and depth of the area of rock removal. However, the OWNER will pay for **no more than** 18 inches plus the I.D. of the water main for trench width.

Rock Excavation by the directional boring method shall be paid for at the contract unit price per cubic yard determined by measuring/estimating the average volume (diameter of rock cutter & estimated length of rock) of the rock removal. However, the OWNER will pay for no more than 1.3 times the diameter of the pipe.

31.11 UNSUITABLE BACKFILL MATERIAL

All backfill material up to a height of 16 inches above the pipe shall be free from rocks greater than three (3) inches in diameter and five (5) inches in length, frozen material,

clubs, stumps, debris, etc.

Where there is a deficiency of suitable backfill material due to a rejection of part or all of the excavated material as unsatisfactory for backfill purposes, the CONTRACTOR shall furnish satisfactory backfill material wasted from trench excavation in other locations or from other sources furnished by the CONTRACTOR.

Where creek gravel, shelf rock, boulders, etc., removed by conventional methods, are encountered in the pipe installation process, all loose rock shall be removed from the bottom of the trench before the pipe is laid. The pipe shall be bedded in six (6) inches of suitable backfill material. The initial backfill up to a depth of 16 inches above the pipe shall consist of suitable backfill.

The CONTRACTOR shall be responsible for disposal (hauling away) of any/all unsuitable backfill material that may not be utilized on the job site. The CONTRACTOR has five (5) working days from original excavation to remove the unsuitable backfill material off site. If after this period of time the unsuitable backfill material is not removed from the site, the OWNER has the right to hire an outside agency to remove the unsuitable backfill material in a timely manner and these costs shall be withheld from the final Cleanup/Seeding retainage funds.

31.12 MISCELLANEOUS ENVIRONMENTAL CONDITIONS

A. Work Within Wetlands

Trench widths shall be kept to 10 feet or less.

Pre-existing wetland conditions shall be restored. The original grade and contour must be established within 30 days after project completion in wetland. The area shall be reseeded within 7 days after surface grading occurs. If construction occurs outside of the growing season, state-of-the art soil erosion control measures must be put in place.

Erosion control measures shall meet the requirements of the NPDES Construction Site Activities permit.

Tree removal is limited to trees less than four (4) inches dbh.

Stockpiling of soil and storage of construction equipment shall occur outside of the wetland.

B. Protection of Endangered Species

Tree clearing shall be avoided during the period of April 1 thru September 30 to avoid the potential impact to roosting Indiana Bats. If it is necessary to clear trees during

this time frame, an Indiana Bat habitat assessment and possibly a mist net survey should be conducted.

C. Archaeological Resources

If archaeological resources are uncovered during excavation, the CONTRACTOR shall immediately halt and contact the ENGINEER.

INSTALLATION OF WATER MAIN AND APPURTANENCES

Table of Contents

Section 41

PAGE

41.01 Scope of Work 41-1

41.02 Construction Methods 41-1

41.03 Excavation (Trench Method) 41-1

41.04 Backfilling (Trench Method) 41-1

41.05 Drainage Ditch / Creek Crossings 41-2

41.06 Water Mains and Water Service Lines near Sewers 41-2

41.07 Preliminary Flushing of Water Main and Equipment 41-4

41.08 Pressure Testing of Water Main and Equipment 41-5

41.09 Disinfection of Water Main and Equipment 41-5

41.10 Thrust Blocks 41-7

41.11 Dewatering 41-8

41.12 Adjusting Utilities 41-8

41.13 Removing Fire/Flushing Hydrants 41-8

41.14 Cutting-In Tees, Valves and Caps 41-8

41.15 Water Main Connection to Structures 41-8

Intentionally Blank

INSTALLATION OF WATER MAIN AND APPURTENANCES

Section 41

41.01 SCOPE OF WORK

The work to be performed under this section shall include all materials, labor, equipment, and all other facilities necessary for the installation of the water mains by the trench method and for the installation of appurtenances as shown on the Drawings and/or herein specified.

41.02 CONSTRUCTION METHODS

Construction methods recommended in the current edition of the *Standard Specifications for Water and Sewer Construction in Illinois* (*Standard Specifications*), as far as applicable, shall be followed. In case of conflict with the *Standard Specifications*, these Technical Provisions shall govern. Installation methods shall also conform to the manufacturer's recommendations for the type of pipe being installed, unless specified differently in this Section. All construction and installation shall also comply with the most recent version of the Illinois State Plumbing Code.

For installation criteria specific to the material type of water main to be utilized, refer to Section 51 "PVC Water Main", Section 52 "Restrained-Joint PVC Water Main," or Section 53 "Ductile Iron Pipe" of these Specifications.

For installation criteria regarding the boring or boring and jacking of water mains and service lines, refer to Section 54 of these Specifications.

41.03 EXCAVATION (TRENCH METHOD)

The trench shall be excavated so that the water main will have a **minimum of 42 inches of cover** in all cases, including under ditches, creeks, rivers, etc, unless a road or railroad permit requires a greater depth. Where a firm foundation is not encountered at the grade established, due to soft, spongy or other unsuitable soil, all such unsuitable soil under the pipe and for the width of the trench shall be removed and replaced with well compacted select GRANULAR BACKFILL, hereafter referred to as "trench backfill".

The cost of furnishing and placing trench backfill for the purpose described above will be considered as incidental work and no additional compensation will be allowed.

41.04 BACKFILLING (TRENCH METHOD)

Where water mains are crossing open areas where early settlement is not critical, backfill shall be made by any acceptable method which will not dislodge or damage the pipe or cause bridging action in the trench. Excavated material free from clods or stones (larger

than three (3) inches) shall be used in backfilling up to 12 inches above the top of the pipe. Excess material shall be neatly rounded over the top of the trench as directed by the ENGINEER to allow for settlement of the trench. In final cleanup operations, the CONTRACTOR shall reshape the surface to level out any uneven settlement that has occurred.

For backfilling under rigid and non-rigid surfaces, including sidewalks, streets, roadways, gravel driveways, and gravel field entrances, trench backfill shall be used. Where trenching is performed longitudinally within three (3) feet of the edge of roadway surfaces (excluding driveways), initial backfill in the trench shall be compacted rock. The material shall be worked around and beneath the water pipe in suitable quantities until the pipe is completely bedded and stabilized, before the remaining backfill is permitted. The remaining backfill shall be deposited and compacted to the satisfaction of the ENGINEER. All paving/surfacing shall be replaced to a condition equal to or better than when construction was started.

Backfilling shall not be done in freezing weather without the permission of the ENGINEER, and it shall not be made with frozen materials. No backfill shall be made where the materials already in the trench are frozen.

Backfilling operations at fittings, gate valves, and hydrant locations shall not occur until all materials and work have been viewed by the OWNER or the OWNER's field observer. No wood shall be allowed in the trench to shim or block out the water main, control the bend of a pipe, or discarded in the trench.

41.05 DRAINAGE DITCH / CREEK CROSSINGS

There are no drainage ditch or creek crossings anticipated on this job.

41.06 WATER MAINS AND WATER SERVICE LINES NEAR SEWERS

Per Title 35 of the Illinois Administrative Code, Section 653.119, water mains and water service lines shall be protected from sanitary sewers, storm sewers, combined sewers, house sewer service connections, and drains, as follows:

A. Horizontal Separation

1. Water mains shall be laid at least 10 feet horizontally from any existing or proposed drain, storm sewer, sanitary sewer, combined sewer, or sewer service connection.

2. Water mains may be laid closer than 10 feet to a sewer line when:

    a. local conditions prevent a lateral separation of 10 feet;
    b. the water main invert is at least 18 inches above the crown of the sewer;

and

c. the water main is either in a separate trench or in the same trench on an undisturbed earth shelf located to one side of the sewer.

3. Both the water main and drain or sewer shall be constructed of slip-on or mechanical joint cast or ductile iron pipe, asbestos-cement pressure pipe, prestressed concrete pipe, or PVC pipe meeting the requirements of Section 653.111 of Title 35, when it is impossible to meet 41.06.A.1 or 41.06.A.2 above. The drain or sewer shall be pressure tested to the maximum expected surcharge head before backfilling.

B. Vertical Separation

1. A water main shall be laid so that its invert is 18 inches above the crown of the drain or sewer whenever water mains cross storm sewers, sanitary sewers, or sewer service connections. The vertical separation shall be maintained for that portion of the water main located within 10 feet horizontally of any sewer or drain crossed. A length of water main pipe shall be centered over the sewer to be crossed with joints equidistant from the sewer or drain.

2. Both the water main and sewer shall be constructed slip-on or mechanical joint cast or ductile iron pipe, asbestos-cement pressure pipe, prestressed concrete pipe, or PVC pipe meeting the requirements of Section 653.111 of Title 35, when:

   a. it is impossible to obtain the proper vertical separation as described in 41.06.B.1 above; or
   b. the water main passes under a sewer or drain.

3. A vertical separation of 18 inches between the invert of the sewer or drain and the crown of the water main shall be maintained where a water main crosses under a sewer. Support the sewer or drain lines to prevent settling and breaking the water main.

4. Construction shall extend on each side of the crossing until the normal distance from the water main to the sewer or drain line is at least 10 feet.

C. Water Service Lines

1. The horizontal and vertical separation between water service lines and all storm sewers, sanitary sewers, combined sewers, or any drain or sewer service connection shall be the same as water main separation described in 41.06.A and 41.06.B above.

2. Water pipe described in 41.06.A and 41.06.B above shall be used for sewer

service lines when minimum horizontal and vertical separation cannot be maintained.

D. Special Conditions

1. Alternate solutions shall be presented to the Illinois Environmental Protection Agency (IEPA) when extreme topographical, geological or existing structural conditions make strict compliance with 41.06.A or 41.06.B above technically and economically impractical. Alternate solutions will be approved provided watertight construction structurally equivalent to approved water main material is proposed.

2. Water mains and water service lines shall be separated from septic tanks, disposal fields, and seepage beds by a minimum of 25 feet. Separation from sewage lagoons shall be 75 feet.

3. Water mains and water service lines shall be protected against entrance of hydrocarbons through diffusion through any material used in construction of the line.

41.07 PRELIMINARY FLUSHING OF WATER MAIN AND EQUIPMENT

Per Section 41 of the *Standard Specifications*, disinfection of all water mains shall be carried out in accordance with AWWA C651. The main shall be flushed prior to chlorination as thoroughly as possible with the water pressure and outlets available. This flushing removes only the lighter solids and care should be used in laying the pipe to keep foreign material out of the pipe. All flushing operations shall be coordinated with the OWNER's licensed operator.

A foam "pig" shall be flushed through each new segment of water main to aid in the removal of any solids, air, and foreign material. The pigs shall be marked for easy identification and inserted at the point of connection for each line segment (place pig on the new construction side of the valve). The first flush of the line shall be accomplished utilizing the pig prior to pressure testing. **ALL WATER MAINS CONSTRUCTED UNDER THIS CONTRACT MUST HAVE A PIG FLUSHED SUCCESSFULLY THROUGH THE LINE AFTER INSTALLATION AND PRIOR TO DISINFECTION AND PRESSURE TESTING.**

Retrieval of the pigs and discharge of the water from the initial flushing operation shall be located a minimum of 10 feet away from the water main trench and in such a location that ensures all of the flushed water travels away from the water main. The discharge end of the pipe shall be a minimum of 18 inches above the ground before and during flushing. The pigs shall not be reused. Used pigs shall be provided to the OWNER.

Where a pig has been flushed through the line and has been torn apart, the water main

will be considered to have unsatisfactory debris lodged inside. The CONTRACTOR shall be required to flush additional pig(s) through the line to clear the debris, prove the lack of debris, and/or determine the location of the blockage, excavate and remove the blockage. Subsequent pigging of the water main after the first time shall be at no additional charge to the OWNER.

Should the CONTRACTOR lose a pig inside of the line, the CONTRACTOR shall be responsible for excavating as necessary, finding and removing the lost pig.

All pigs shall be inserted and retrieved in the presence of the Resident Project Representative (RPR). The CONTRACTOR shall coordinate all pigging operations with the ENGINEER so that the RPR will be available. Pigging not witnessed by the RPR will **NOT** be considered as a successful initial flushing of the main extension. All work associated with flushing the water mains shall be incidental to the Contract Price.

41.08 PRESSURE TESTING OF WATER MAIN AND EQUIPMENT

All tests and testing equipment shall be provided by the CONTRACTOR at no cost to the OWNER. Prior to performance of the test, all air shall be expelled from the pipeline to the satisfaction of the ENGINEER. This may be accomplished by means of hydrants or other means. If required, taps shall be made at high points where air relief valves are not called for on the Drawings. Such taps shall be plugged after testing is complete. Pressure test and leakage test procedures should comply with the *Standard Specifications*, Section 41-2.14. The leakage test is not an acceptable formal test for passing a water main, only the pressure test is allowable.

Pressure 50 percent in excess of working pressure, as measured at the point of lowest elevation, shall be applied for not less than one (1) hour, and all pipe, fittings, valves, hydrants, and joints shall be carefully examined for defects. Leaking joints shall be remade and then retested.

The CONTRACTOR shall have the full test pressure applied to the water main segment, and verify that the water main segment is holding pressure, prior to notifying the resident project representative to observe the formal one (1) hour pressure test. Pressure test observation requests after 3:30 P.M. will be performed the next working day.

41.09 DISINFECTION OF WATER MAIN AND EQUIPMENT

A. Requirements of Chlorination

Before being placed in service, all new mains or extensions to existing mains, shall be chlorinated, so that a chlorine residual of not less than 25 ppm remains in the water after 24 hours of standing in the pipe.

Please note, it is suggested that all personnel that are responsible for conducting the testing refresh themselves with the requirements of AWWA C651. This section

does not allow the installation of HTH, granular chlorine, or chlorine tablets during installation of the mains as a form of the final disinfection of the water mains for potable use. It does allow HTH, granular chlorine or chlorine tablets to be placed in the water line at joints to disinfect the joints if the water line is flooded or the ground water is contaminated and has the possibility of leaking in the joints during construction, but requires that the line be flushed to remove all of the granulated chlorine or chlorine tablets prior to starting the induction of chlorine into the line to obtain the 25 ppm of chlorine after 24 hours to satisfy the minimum state disinfection process allowed for potable water lines.

B. Point of Application

The preferred point of application of the chlorinating agent is at the beginning of the pipeline extension, or any valve section of it, and through a corporation stop inserted in the top of the newly laid pipe.

C. Rate of Application

Water from the existing distribution system or other source of supply, shall be controlled so as to flow slowly into the newly laid pipeline during the application of chlorine. The rate of chlorine mixture flow shall be in such proportion to the rate of water entering the pipe that the chlorine dose applied to the water entering the newly laid pipe shall produce at least 25 ppm after 24 hours of standing. This may be expected with an application of 50 ppm, although some conditions may require more.

D. Preventing Reverse Flow

Valves shall be manipulated so that the strong chlorine solution in the line being treated will not flow back into the line supplying the water.

E. Disinfection of Valves and Hydrants

In the process of disinfecting newly laid pipe, all valves, or other appurtenances, shall be operated while the pipeline is filled with the chlorinating agent.

F. Disinfection of Altitude Valve/ Pressure Reducing Valves, etc.

In the process of disinfecting newly laid pipe, all altitude valave, pressure reducing valves, or other equipment or appurtenances, shall be operated while the pipeline is filled with the chlorinating agent.

G. Final Flushing and Testing

Following chlorination, all treated water shall be thoroughly flushed from the newly

laid pipeline at its extremities until the replacement water throughout its length shall, upon test, be proved comparable in quality to the water served the public from the existing water supply system.

After flushing, two (2) consecutive water samples collected on two (2) separate days, at least 24 hours apart, from each designated Sampling Point, as designated by the ENGINEER, shall show satisfactory bacteriological results, as defined by IEPA Public Water Supply. In the event that the samples do not pass, additional samples shall be taken as required by IEPA Public Water Supply. Continuous flushing between the two samples shall not be allowed. Bacteriological analysis must be performed by a laboratory approved by the IEPA. The CONTRACTOR shall perform all testing and provide all bacteriological analysis results to the ENGINEER and the OWNER.

All bacteriological sampling work shall be performed in the presence of the RPR or the OWNER's personnel and those same personnel shall accompany the CONTRACTOR's employee along with the water samples to the lab. If the water tests are not drawn and delivered to the IEPA approved lab in the presence of the RPR or the OWNER personnel, irregardless of the lab results, the water test and the line **will not** be accepted by the OWNER.

Payment for bacteriological sampling will be incidental to the CONTRACTOR's bid price. The CONTRACTOR shall include all necessary materials and labor to obtain two (2) passing samples as described above.

41.10 THRUST BLOCKS

All bends of 11-1/4 degrees or greater, and all tees, plugs, reducers, fire hydrants, and flushing hydrants shall be thrust protected to prevent movement of the lines under pressure. Blocking shall be Portland Cement Concrete poured in accordance with Section 41-2.10 of the *Standard Specifications*, or precast, solid blocking for small diameter pipe where the undisturbed soil is extremely firm and stable. Thrust blocking shall extend from the fitting to the undisturbed soil. Pipe and fitting joints shall remain accessible for repairs. Where unstable soil conditions exist, all deflections in the pipe from a straight line shall be provided thrust blocking in accordance with the manufacturer's recommendations. Concrete for reaction or thrust blocks shall have a 28 day compressive strength of not less than 3,000 psi.

No wooden wedges, treated or otherwise, shall be allowed for shims for the blocking in any circumstance. PVC pipe may not be used in lieu of concrete blocks.

Where a fitting is used to make a vertical bend, the fitting shall be anchored to a thrust block braced against undisturbed soil. The thrust block should have enough resistance to withstand upward thrusts at fitting.

41.11 DEWATERING

The CONTRACTOR shall at all times during construction provide and maintain ample means and devices with which to promptly remove and properly dispose of all water entering the trenches or excavation. All trenches or excavation shall be kept dry until construction is complete. No foreign water shall be allowed to enter any pipe which has been laid. No water shall be allowed to stand over concrete until the concrete has set for at least 24 hours. This refers to thrust blocks, anchorages, foundations, etc.

41.12 ADJUSTING UTILITIES

All utilities, including wiring, light standards, signal lights, sewers, private water lines, buried telephone cable, underground gas lines, etc., affecting the construction of the proposed improvement shall be adjusted at the CONTRACTOR's expense. It shall be the CONTRACTOR's responsibility to determine the exact location of all utilities. All adjustments shall be done as specified by the owner of the utility. If the CONTRACTOR damages any utility not requiring adjustment, they shall replace or repair it as required by the utility owner and no additional compensation will be allowed. No attempt has been made on the Drawings to show all utilities or their exact locations.

41.13 REMOVING FIRE/FLUSHING HYDRANTS

Where indicated on the Drawings or requested by the OWNER or ENGINEER, existing fire/flushing hydrants may be removed where an existing water main is to be extended/connected/removed. The CONTRACTOR shall remove and leave it in a convenient location for pick up by the OWNER's operator.

41.14 CUTTING-IN TEES, VALVES, AND CAPS

Where indicated on the Drawings or requested by the OWNER or ENGINEER, tees, gate valves and/or caps of the appropriate size shall be cut-in to the existing water main. The CONTRACTOR's bid price for cutting-in tees, valves and/or caps shall include locating the existing water main (and other appropriate utilities); shutting off the flow of water at nearby valves or with line stops as necessary; installation at the new location complete with all necessary appurtenances; pressure testing and disinfection as appropriate; and all other associated tasks. CONTRACTOR shall coordinate the schedule of each line stop with the OWNER/ENGINEER.

41.15 WATER MAIN CONNECTION TO STRUCTURES

The CONTRACTOR shall furnish all labor, materials, fittings, tools, and equipment necessary for the complete installation of the necessary piping, valves, and appurtenances to physically connect the proposed water main to the proposed or existing structure (elevated tank, ground storage tank, booster pump station, etc.), as shown on the Drawings.

POLYVINYL CHLORIDE (PVC) WATER MAIN

Table of Contents

Section 51

PAGE

51.01 Scope of Work 51-1

51.02 Materials 51-1

51.03 Execution 51-3

Intentionally Blank

POLYVINYL CHLORIDE (PVC) WATER MAIN, RUBBER RING JOINTS

Section 51

51.01 SCOPE OF WORK

The CONTRACTOR shall furnish all equipment, material, labor, standard fittings, skills, special fittings, couplings, etc., for the satisfactory installation of plastic waterline.

The CONTRACTOR shall bid a lineal foot price for the various sizes, diameters and pressure ratings as indicated on the Bid Form. Where allowed, all Polyvinyl chloride (PVC) fittings, couplings, adaptors, lubricants, gaskets and similar items shall be included in the bid price per lineal foot for PVC water main and no additional compensation will be allowed for these items.

All plastic pipe shall meet the specifications of the National Sanitation Foundation (NSF). The pipe manufacturer shall furnish certification in sufficient copies that the pipe supplied is in compliance with all requirements as specified herein.

The water main shall be PVC pipe, push-on gasketed joints, SDR 21 for CL 200 or C900 DR25, (or other classes and materials as called out on the Drawings) in accordance with Section 40 of the *Standard Specifications for Water and Sewer Construction in Illinois* (*Standard Specification*) for all water main smaller than 16 inches in diameter. All water main 16 inches in diameter or greater shall be PVC pipe, push-on gasketed joints, C905, DR 25.

Any bend in the water main greater than 20-degrees will require a mechanical joint, ductile iron, elbow fitting.

51.02 MATERIALS

A. PVC Pipe

1. SDR-PR PVC Pipe: SDR (Standard Dimension Ratio) - PR (Pressure Rated) PVC pipe shall be Type I, Grade 1 or 2, with a hydrostatic design stress of 2000 psi for water at 73.4EF, designated as PVC 1120 or PVC 1220.

2. Samples of pipe, physical and chemical data sheets shall be submitted to the ENGINEER for approval, and approval shall be obtained before pipe is purchased.

3. PVC pipe with SDR ratings of 13.5, 17, 21 and 26 are to be used or as indicated on the Bid Form, and shall conform to the latest revision of ASTM Specification D2241.

4. The pipe shall be homogeneous throughout and free from cracks, holes,

foreign inclusions or other defects. The pipe shall be as uniform as commercially practical in color.

5. The pipe can be supplied with the bell as an integral part of the pipe. The thickness of the bell shall be greater than the wall of the pipe and the bell shall have a recessed groove to retain the rubber gasket seal. If the CONTRACTOR proposes to use this type of single gasket jointing pipe system, approval must be requested from the ENGINEER.

6. Pipe must be delivered to the job site by means which will adequately support it and not subject it to undue stresses. In particular, the load shall be so supported that the bottom rows of pipe are not damaged by crushing. Pipe shall be unloaded carefully and strung or stored as close to the final point of placement as is practical.

7. Miscellaneous lengths of pipe can also be supplied plain end, and joints made with the use of a double gasket coupling. These couplings shall be provided with pipe stops and have a pressure rating of 200 psi working pressure.

8. The workmanship, pipe dimensions and tolerances, outside diameters, wall thickness, eccentricity, sustained pressures, burst pressures, flattening, extrusion quality, marking and all other requirements of the Commercial Standards, CS 256-63 and ASTM Specification D1784, shall be conformed with in all respects.

9. The PVC pipe shall bear the National Sanitation Foundation (NSF) seal of approval.

10. Pipe shall be protected from truck exhaust during transportation.

11. Pipe shall be protected from crop spraying while stored onsite or strung for installation, prior to installation.

B. Fittings

1. General: Fittings include tees, elbows, crosses, reducers, caps, plugs, and wyes.

2. **All fittings associated with PVC water main installation shall be ductile iron.** See Section 53 of the Specifications for details of the fittings.

3. Fittings shall conform to AWWA C153 (short body) or AWWA C110, 2-inch to 48-inch, for 250 psi water pressure plus water hammer.

4. All fittings except plugs and sleeves shall be cement lined to conform to

AWWA C104 with bituminous seal coat.

5. Application gaskets, glands, and bolts shall be furnished. All bolts shall be stainless steel or corrosion resistant meeting the requirements of AWWA C111/A21.11 and ASTM A242.

6. Sleeves and plugs shall be bituminous seal coated.

51.03 EXECUTION

A. PVC Pipe Laying

1. General

Only competent persons at laying plastic pipe shall be employed on this phase of the work, and complete suitable equipment necessary for the execution of same is required. Any incompetency observed by the OWNER must be removed at their request, and where improper equipment or lack of same appears to be impairing the quality or speed of the work, such adjustments in same shall be made to the OWNER's satisfaction.

The pipe, fittings, and valves shall be placed in the trench with care. Under no circumstances shall pipe or other materials be dropped or dumped into the trench. The pipe shall not be dragged in a manner which would cause scratching on the surface of the pipe and will be considered cause for rejection.

Pipe shall be installed in accordance with the manufacturer's recommendations and the *Standard Specifications*.

2. Pipe Cleaning During Laying Operation

If dirt or dust has been introduced into the length of pipe, a thorough cleaning of the pipe shall be done just before the joint of pipe is installed. At this time a visual check shall be made by placing the pipe in an inclined position to assure that all foreign matter and dirt is removed from the inside of the pipe. The pipe shall be kept clean during and after laying. At the termination of pipe laying the open end of the pipeline shall be closed off by a suitable cover until laying operations are resumed.

3. Inspection of Materials during Construction

Any materials not meeting the Specifications, or obviously faulty material, shall be rejected by the ENGINEER and removed from the job site by the CONTRACTOR. When ordered by the ENGINEER, joints may be cut from the pipeline for inspection.

All fittings, gate valves, and hydrant locations shall be viewed by the OWNER or ENGINEER’s Resident Project Representative (RPR) prior to any backfill

operations.

4. Fluid Tight Joints
All dirt, debris and moisture shall be removed from the surfaces to be jointed. Make sure the gasket is not twisted or turned to prevent proper sealing in the groove. Apply the lubricant to the gasket surface and to the spigot end of the pipe. The joint is made by one quick easy motion making sure the guide mark has reached the end of the fitting.

5. Breaks in Pipe or Joints
Breaks shall be repaired to the satisfaction of the ENGINEER and at the expense of the CONTRACTOR. The defective pipe or fittings shall be removed and replaced. Repair clamps will **not** be permitted.

6. Cutting Pipe
All cutting of the pipe shall be done in a neat workmanlike manner with the least amount of waste of pipe involved and without damage to existing or new lines. A fine tooth saw, tubing cutter or similar tool can be used to cut the pipe. Cut must be square and ragged edges removed with a cutting tool and/or file.

7. Bed and Cover
Each section of pipe in the trench shall rest upon the pipe bed for the full length of its barrel. The bottom of the trench shall be free from rocks, clods, or other sharp-edged objects. The subgrade upon which the pipe is placed shall consist of material suitable for supporting the pipe without excessive settlement of stress development.

If the pipe is to be laid in a trench having a rock bottom, six (6) inches of sand or other suitable bedding material shall be prepared before the pipe is lowered into the trench.

All backfill to 12 inches over the top of the pipe shall contain no stones larger than three (3) inches. Final backfill shall be carefully placed to avoid dropping rocks or large clods on top of the pipe.

Service lines and laterals must be assembled so that no strain is placed on the pipe during or after backfill operation.

After laying of the pipe is completed, it shall be center loaded with backfill to prevent arching and whipping under pressure. Center loading should be done carefully so that joints will be completely exposed for examination during testing, unless conditions warrant complete backfill before testing.

B. Preliminary Pressure Testing

At the ENGINEER's option during the general construction period the following pressure testing procedure shall be followed:

After the PVC pipe is assembled trench side or in the trench, a test of not less than 50 percent above the system's anticipated working pressure shall be applied with either air or water. After two consecutive tests have been performed without any failure, the CONTRACTOR at their option and with the ENGINEER's approval may discontinue testing until the system is completed. A hydrostatic test shall then be run as outlined in Paragraph C, this Section.

If there is a change of laying conditions, technique or personnel after the testing has been discontinued the CONTRACTOR should, and at the ENGINEER's request will, test additional sections to provide assurance that this change is satisfactory.

C. Hydrostatic Tests

All tests and testing equipment shall be provided by the CONTRACTOR at no cost to the OWNER. Prior to performance of the test all air shall be expelled from the pipeline to the satisfaction of the ENGINEER. This may be accomplished by means of hydrants or other means. If required, taps shall be made at high points where air relief valves are not called for on the drawings. Such taps shall be plugged after testing is complete. These additional taps shall be considered incidental to the Contract Price, **no additional compensation shall be allowed**.

After the pipe has been laid and center loaded, or backfilled if conditions warrant complete backfilling, a test pressure of 100 psi or not less than 50 percent above system's design working pressure, whichever is greater, shall be achieved. After the specified pressure has been reached, the pump shall be stopped and all exposed pipe, fittings, valves, hydrants, joints, and appurtenances examined for leaks. Any visible leaks shall be repaired. The installation will be considered acceptable when the specified test pressure has been maintained without loss for a period of not less than two (2) hours or until the ENGINEER has inspected and approved the test section, whichever is longer.

D. Removal of Air

In the event air is admitted to the pipeline after being expelled for the hydrostatic tests, such air shall be removed prior to completion of the system and acceptance by the OWNER. The air may be removed by the methods described in Paragraph C. In no case shall the system be placed in operation prior to the removal of the air.

E. Service Connections

All service connections shall be made by means of tees, tapped couplings, service

clamps and other fittings approved by the ENGINEER. The use of solvent weld plastic saddles will not be permitted. Wherever possible corporation stops shall be placed in plastic lines before conducting hydrostatic tests.

F. Measurement and Payment

Payment for all work described in this Section shall be included in the CONTRACTOR's bid price as shown in the Bid Form.

RESTRAINED-JOINT (PVC) WATER MAIN, RUBBER RING JOINTS

Table of Contents

Section 52

PAGE

52.01 Scope of Work 52-1

Intentionally Blank

RESTRAINED JOINT (PVC) WATER MAIN, RUBBER RING JOINTS

Section 52

52.01 SCOPE OF WORK

There is no restrained joint PVC water main anticipated on this job.

Intentionally Blank

DUCTILE IRON PIPE

Table of Contents

Section 53

PAGE

53.01 Scope of Work 53-1

53.02 Materials 53-1

53.03 Execution 53-2

Intentionally Blank

DUCTILE IRON PIPE

Section 53

53.01 SCOPE OF WORK

The CONTRACTOR shall furnish all material, labor, fittings, couplings, equipment, etc. necessary for the satisfactory installation of the waterline.

The CONTRACTOR shall bid a lineal foot price for the various sizes, diameters and pressure ratings as indicated on the Bid Form. All fittings, couplings, adaptors, lubricants, gaskets and similar items shall be included in the bid price per lineal foot for water main, and no additional compensation will be allowed for these items.

53.02 MATERIALS

All ductile iron pipes shall be manufactured in accordance with all requirements of AWWA Standard C151. Standard laying length is either 18 feet or 20 feet. All pipe shall meet the following thickness requirements:

For Flanged Pipe:

Pipe Size (Nominal I.D.)	Thickness Class
3"-16"	53

For Non-Flanged Pipe:

Pipe Size (Nominal I.D.)	Minimum Thickness	Pressure Class
4"	0.26"	350
6"	0.25"	350
8"	0.27"	350
10"	0.26"	350
12"	0.28"	350
14"	0.28"	250
16"	0.30"	250

The inside of the pipe shall be cement lined in accordance with AWWA Specification C104, ANSI A21.4, with a bituminous seal coat.

For underground installation, all exterior surfaces of ductile iron pipe shall have a bituminous coating of either coal tar or asphalt base at least one (1) mil thick.

For above ground installations, exterior surfaces shall be as described in the protective coatings specification.

Mechanical joint pipe shall be furnished with gaskets, glands, and bolts. Bolts shall be stainless steel or corrosion resistant meeting the requirements of AWWA C111/A21.11 and ASTM A242. A manufacturer certification shall be included with all shop drawing submittals as to the corrosion resistant material utilized.

Hydrocarbon resistant gaskets shall be used for ductile iron pipe crossing petroleum product lines.

The exposed ductile iron pipe and couplings shall be wrapped in polyethylene encasement conforming to AWWA C150/A21.5 at all petroleum product line crossings. Polyethylene material will deteriorate rapidly when exposed to direct sunlight. Store all polyethylene encasement out of the sunlight. If during the installation period it is anticipated that the polyethylene encasement will be exposed to sunlight for more than two weeks (ie. Open trench) Type C (black) polyethylene material must be used.

Slip-joint pipe shall be furnished with gaskets and lubricant, and be in accordance with AWWA Standard C111.

Pipe shall be protected from truck exhaust during transportation.

Pipe shall be protected from crop spraying while stored onsite or strung for installation, prior to installation.

All ductile iron fittings shall conform to AWWA C153 (short body) or AWWA C110, two (2) inch to 48 inches, for 250 psi water pressure plus water hammer. All fittings except plugs and sleeves shall be cement lined to conform to AWWA C104 with a bituminous seal coat. Application gaskets, glands and bolts shall be furnished. All bolts shall be stainless steel or corrosion resistant meeting the requirements of ANSI/AWWA C111/A21.11 and ASTM A242. Sleeves and plugs shall be bituminous seal coated.

Flanged fittings shall conform to AWWA C110 with pressure rating equal to or greater than the pipe. Fittings shall be cement lined. Exterior coating shall be as prescribed in the protective coatings specification.

53.03 EXECUTION

Pipe shall be laid in accordance with the manufacturer's recommendations, AWWA Standard C600 and the *Standard Specifications*.

Pipe shall be protected during handling against impact shocks and free fall. Proper methods shall be used for handling and placing pipe to avoid damage or breaking and to avoid unnecessary disturbance of bedding surface in trench bottom. Pipe shall be kept clean at all times and no pipe shall be used in the work which does not conform to these Specifications.

The pipe shall be laid in the direction that the trench runs so that the bell end of each pipe

shall be in a position to receive the spigot end of each successive pipe length.

At **all** times when work is not in progress, all open ends of pipe and fittings shall be securely closed with metal plugs or caps so that no trench water, earth, animal, or other substances may enter the pipe or fittings.

Prior to lowering a piece of pipe or fitting into the trench, the item shall be inspected for foreign materials and said materials removed.

The CONTRACTOR shall thoroughly clean all joints before jointing sections of pipe. They shall use the lubricating material in the amount, and in accordance with manufacturer's directions.

The CONTRACTOR shall provide a suitable method of installation to ensure the pipe being entered true and concentric with the previously laid pipe so as to prevent injury to the rubber gasket.

Mechanical methods shall be employed to pull or push the pipe together with sufficient force to compress the jointing material to form a water and pressure tight joint.

Where/if the water main crosses an existing petroleum pipeline, slip-joint ductile iron pipe with hydrocarbon resistant gaskets shall be used for a length as required to obtain at least 25 feet clear distance from the water main to the petroleum pipeline.

All joints that result in a change of direction shall be restrained with a concrete thrust block in such a fashion so that the weight and thrust are transferred to the undisturbed soils of the trench. These thrust blocks shall be made of concrete and placed where and as directed by the ENGINEER.

All underground pipe will be laid with a protective cover of at least 42 inches.

Hydrostatic and pressure testing shall conform to Section 51, “PVC Water Main”.

Intentionally Blank

BORING WATER MAINS

Table of Contents

Section 54

PAGE

54.01 Scope of Work 54-1

54.02 Traffic and Safety 54-1

54.03 Construction Details 54-1

54.04 Basis of Payment 54-2

54.05 Bore and Jack Casing Pipe 54-2

54.06 Directional Boring - Water Main 54-2

Intentionally Blank

BORING WATER MAIN

Section 54

54.01 SCOPE OF WORK

The CONTRACTOR shall furnish all equipment, machinery, labor and materials necessary to perform all operations in connection with the conventional boring and pulling or directional boring of water mains and service lines of the required diameter and type of material at locations that may be designated at time of construction. Permits required by the state, county, and township highway departments, railroads, and waterway authorities will be acquired by the OWNER.

The CONTRACTOR shall be responsible for notification of appropriate officials as required by highway and railroad permits.

Private driveways constructed of concrete, asphalt, or oil and chip shall also be bored, utilizing the same methods, procedures, and method of payment as for boring under roadways. Since individual property owners may have improved their driveways after the construction Drawings were assembled and prior to pipeline construction, the Drawings do not necessarily depict all locations where boring of driveways will be required.

The CONTRACTOR is responsible for any charges by the railroad(s), IDOT and others for flagmen, foremen, engineering observers, and others during the course of the work and shall include such costs in their bid price.

54.02 TRAFFIC AND SAFETY

The CONTRACTOR shall use all safety procedures, equipment, and planning necessary to perform the conventional bores or directional bores for installation of the water mains and service lines. The boring procedure is to avoid disturbance of the travel surface, and shall not cause any inconvenience to the traveling public. At all locations where traffic must be maintained, the operations shall be carried on without encroachment upon the traveled way by the excavation, the storage of materials or equipment, or the use of construction equipment. Open cut excavation will not be allowed within the specified distance from the edge of the traveled surface. All stipulations of the highway and/or railroad departments shall be adhered to along with the approval of the OWNER.

54.03 CONSTRUCTION DETAILS

The CONTRACTOR is reminded that their work must remain within the construction easement, as specified on each individual easement. Any construction activity outside the easements provided is solely at the CONTRACTOR's risk, responsibility, and liability. Including cost associated with the removal and reinstalling of said water main(s), services, and appurtenances to private easement or right-of-way which ever may occur.

All sheeting, bracing, shoring, and other materials necessary for the complete installation of the main lines and service lines under roadways and driveways shall be of sufficient strength and construction to handle the loads that are to be imposed upon them.

The alignment and elevation of the forward end of the boring shall be checked and if it does not meet the requirements of the permit, the auger will be pulled and a new boring made at no additional cost to the OWNER.

The CONTRACTOR shall fill over excavation of bore and recovery pits at entrance and exit of water main through bore hole with compacted sand or GRANULAR BACKFILL (CA-7) when directed by the OWNER/ENGINEER to the bottom of the water main giving a sound foundation for the water main preventing the water main from shearing as the backfill settles. Payment for the sand or GRANULAR BACKFILL shall be considered incidental to the Contract Price for bores.

54.04 BASIS OF PAYMENT

All work associated with conventional borings including the use of bentonite, polymers, soups or a combination there of will be paid for as part of the lump sum contract unit price furnished by the CONTRACTOR'S "LUMP SUM BID". The price shall include all excavation, boring, equipment, labor, materials, dewatering, traffic safety control, placement and compaction of granular backfill, and other miscellaneous work as necessary. Note: an approximate bore length has been indicated on the Drawings for each particular bore.

54.05 BORE AND JACK CASING PIPE

A. General

There are no bore jack requirements for this contract.

54.06 DIRECTIONAL BORING - WATER MAIN

A. General

Where indicated on the Drawings and in the Bid Form, the CONTRACTOR shall provide directional boring of water mains of the diameter as specified, for passage under roadways, driveways, waterways, and/or thru private property. No casing pipe shall be furnished or placed under this item of work.

Directional boring of 4 inch and 6 inch water mains under State Highways shall be accomplished as specified in Section 54.06.G.

B. Materials

All water mains for directional bores shall be C900 PVC.

C. Payment

When directed either by the Drawings or the ENGINEER to utilize directional boring to install water lines, payment for this work shall be included in the "LUMP SUM CONTRACT PARICE".

D. Service Line Bores

There

E. Specified Distance from the Edge of the Pavement

Open cut excavation will not be allowed within the specified distance from the edge of the traveled surface. All stipulations of the various highway departments shall be adhered to along with the approval of the OWNER. The following minimum distances will be maintained from the edges of the following various roadway or driveway surfaces, unless otherwise specified in the specific permit for that bore, for all directional bores (water mains and service lines):

State Highways	15 feet
County Highways	10 feet
Township Roadways	10 feet
Driveways	5 feet

These distances will be the basis of payment for each directional bore under the various roadways or driveways. No payment for borings will be allowed **beyond** these specified distances, unless approved by the ENGINEER and/or OWNER.

F. Specified Distance for Waterways

Since waterway surfaces and streambed/stream bank profiles occur in such a variety of configurations, and since CONTRACTOR's may employ a number of methods for directional boring depending on pipe installation angle, convenience, etc., it is not possible to come up with a single rule for specified directional bore distances. A reasonable directional bore length has been indicated on the Drawings for each particular directional bore, which constitutes the **maximum** pay length for that bore. If the CONTRACTOR feels that additional directional bore length is necessary for them to properly cross under the waterway, then they should account for such in their bid, as no additional pay will be allowed. Other payment conditions listed in Section 54.06.C apply.

G. Procedures

The CONTRACTOR shall use water, bentonite, polymer, or bentonite/polymer mixture for the mud mixture needed for the directional boring procedure and shall include the

costs of these items in their unit bid price. The CONTRACTOR shall use the mixture required by the type of soil encountered.

The CONTRACTOR shall use the backreamer needed to satisfy the conditions of the directional bore and the type of soil encountered. Spiral or coned backreamers are designed to push foreign objects such as rocks and tree roots out of the way or off to the side of the directional bore path. The surface area of the cone shaped backreamers is large so this will create a lot of drag. The wing cutter, which allows the mixed material to flow through, provides the best results in mixing.

For 8-inch diameter or smaller pipe, a reamer larger than 1.5 times the diameter of the pipe should not be used without the permission of the ENGINEER. For 10-inch diameter or larger pipe, a reamer of 1.3 times the diameter of the pipe or smaller is required, unless given permission by the ENGINEER.

It is recommended that the pipe follow immediately behind the backreamer or expander because the directional bore hole will start to close up instantly after the backreamer or expander is pulled through. This allows limited time, depending on the soil condition, to push the pipe in the hole. When trying to push the pipe in the closing hole, the pipe could bend. When this occurs the pipe will be under a considerable amount of tension and compression and could result in the shattering of the pipe. The pipe under the roadway could also be damaged from this compression stress on the pipe.

H. Damaged Pavement

There are several factors that affect the disfiguration of the ground surface of a directional bore. The depth of the directional bore under the surface is critical. The increase in depth of the directional bore will decrease the chance of the pavement bulging. Hydra-lock is another factor that could cause surface damage.

Hydra-lock is created during pull back, when not enough mud is pumped into the hole or poor mud mixture is used. During hydra-lock, fluid that is being pumped out of the backreamer is completely contained within the hole, rather than flowing out of the inlet and/or outlet hole. Without an escape route, the fluid being pumped into the hole becomes pressurized, acting like a hydraulic cylinder - the pressure prevents the pipe from moving until the fluid finds an escape route. This may cause cracking or disfiguration at the surface to release the pressure.

Any cracking or damage caused by the directional boring operation to the traveled surfaces (regardless of the soil and/or rock type encountered) shall be repaired or replaced, at the CONTRACTOR’s expense, as required by the OWNER, the ENGINEER, or railroad or highway officials.

I. Surface and Utility Impairments

All utilities, including wiring, light standards, signal lights, sewers, private water service

lines, buried telephone cable, underground gas lines, field tiles, etc., affecting the construction of the proposed improvement shall be adjusted at the CONTRACTOR's expense. No attempt has been made on the Drawings to show all utilities or their exact locations. It shall be the CONTRACTOR's responsibility to determine the exact location of all utilities. All adjustments shall be done as specified by the owner of the utility.

If the CONTRACTOR damages any utility not requiring adjustment, they shall replace or repair it as required by the utility owner or by the ENGINEER and no additional compensation will be allowed.

Intentionally Blank

VALVES, HYDRANTS, AND APPURTENANCES

Table of Contents

Section 57

		PAGE
57.01	Service Line	57-1
57.02	Flushing Hydrants	57-1
57.03	Fire Hydrants	57-1
57.04	Butterfly Valves	57-2
57.05	Gate Valves	57-2
57.06	Ball Valves	57-2
57.07	Valve Boxes	57-3
57.08	Air Release Valves	57-3
57.09	Plugs	57-3
57.10	Tracer Wire	57-3
57.11	Tapping Sleeve	57-4
57.12	Valve Markers	57-4
57.13	Meter Box and Cover	57-4
57.14	Back Pressure Valves	57-5
57.15	Pressure Relief Valves	57-5

Intentionally Blank

MATERIAL SPECIFICATIONS FOR VALVES, HYDRANTS, AND APPURTENANCES

Section 57

57.01 SERVICE LINE

There is no service line required for this project.

57.02 FLUSHING HYDRANTS

There are no flushing hydrants required for this project.

57.03 FIRE HYDRANTS

Fire hydrants shall have a base connection as required for the type and size of pipe used in the water main construction. The hydrant shall be designed for 150 lbs working pressure and 300 lbs hydrostatic test pressure. Hydrants shall be of the dry barrel type, with breakable body traffic model, conforming to AWWA C502, and shall have a valve opening at least five and one-fourth (5-1/4) inches in diameter. The fire hydrant shall be designed for a minimum of 48 inches bury. The hydrant shall have two, two and one-half (2-1/2) inch hose connection, and one, four and one-half (4-1/2) inch pumper connection. The hydrant shall have male connections with National Standard hose coupling threads. The opening of the hydrant shall be counterclockwise, and the operating nut shall be National Standard one and one-half (1-1/2) inch pentagon. An arrow shall be cast or stamped on the top indicating the direction to open. Hydrants shall be painted with one (1) primer coat of red paint and two (2) red finish coats.

The hydrant must employ a compression type main valve which closes with pressure. The operating nut is to be made of bronze or cast iron. The operating threads and thrust collars shall be sealed from the waterway by one (1) or more “O” rings and shall be lubricated from a sealed, self-contained lubricant reservoir. Upper and lower stems shall be jointed with a cast iron coupling with stainless steel pins.

There shall be a minimum of two (2) drain ports. These drains shall be of bronze. The drain valves shall be rubber or leather faced and shall work automatically with the main valve and permit draining of the barrel with the main valve closed. Springs must be bronze or stainless steel if springs are utilized in drain valve assembly.

The hydrant seat must be bronze with a machined seating surface. The main valve assembly shall be seated in a subseat of all bronze material so as to provide bronze to bronze engagement of the valve seat ring and to provide a drainage channel of non-ferrous material. This bushing must be locked in place mechanically to prevent rotation or accidental removal.

Fire hydrants shall be set at such elevations that the connecting pipe will not have less cover than the water main. Blocking shall be as shown on the Drawings. Not less than seven (7) cubic feet of clean gravel shall be placed around the base of the hydrant to ensure drainage. A woven, nylon, polypropylene fabric shall be placed over the gravel to prevent infiltration of soil into the drainage field. The backfill around the hydrant shall be thoroughly compacted to the grade line. Hydrants shall have the interior cleaned of all foreign matter before installation. Stuffing boxes shall be tightened and the hydrant shall be inspected in working condition. Before final acceptance, fire hydrants shall be set for pumper service relative to the street location and to the satisfaction of the ENGINEER.

All hydrants shall be set plumb and the pumper nozzle shall face the street. The safety flange shall be set approximately four (4) inches above ground level. All hydrants shall be Mueller, Kennedy, or equal.

57.04 BUTTERFLY VALVES

NOT APPLICABLE

57.05 GATE VALVES

Gate valves shall be designed for a minimum water working pressure of 250 psi. Valves shall be resilient wedge, non-rising stem type, and shall be used with the type of pipe and joint to be installed. Gate valves shall have a clear waterway equal to the full nominal diameter of the valve and shall be opened by turning counterclockwise. The operating nut shall have an arrow, cast in the metal, indicating the direction of opening. Each valve shall have the maker's initials, and pressure ratings cast on the body. Prior to shipment from the factory, each valve shall be tested by hydraulic pressure equal to twice the water working pressure.

Gate valves shall conform to AWWA Standards C509 & C550 for cast iron or AWWA C515 & C550 for ductile iron valves. All gate valves shall be Mueller A-2360, with 'O' ring seals, or equal.

Gate valves shall have mechanical joints. No “push-on” joints will be allowed. All bolts for the bonnet shall be stainless steel or approved equal. All bolts for the retained glands shall be stainless steel or corrosion resistant meeting the requirements of AWWA C111/A21.11 and ASTM A242.

57.06 BALL VALVES

Ball valves shall be designed for a minimum water working pressure of 250 psi.

Ball valves for the sodium hypochlorite feed system shall be Hayward True union Z-Ball Valves or equal. The valve shall effectively vent the crystalline salts and oxygen gas that gathers as the sodium hypochlorite decomposes, eliminating gas accumulation and salt crystallization. The valve shall keep the inner valve surfaces constantly wetted, to ensure

problem free use. The valve shall feature a double O-ring stem for leakage protection. The valve shall have reversible seats.

Ball valves for the ammonia and phosphate chemical feed system shall be Hayward true union PVC ball valves or equal. The seals shall be compatible with the chemical being utilized. The seats shall be reversible so if they are damaged, the seats are reversible.

57.07 VALVE BOXES

Valve boxes shall be ductile iron or plastic pipe. Ductile Iron Boxes shall be of the extension type with screw adjustment and flared base. The minimum thickness of metal shall be three-sixteenth (3/16) inch. The word "WATER" shall be cast in the cover. Ductile Iron Boxes shall be installed over each gate valve. The boxes shall be of such a length that will permit adjustment in length, without full extension, to the depth of cover required over the pipe at the valve location. Final adjustment can be at cleanup.

Valves and valve boxes shall be installed at locations determined by the ENGINEER or the ENGINEER's Resident Project Representative (RPR). Valves not set at that location shall be relocated by the CONTRACTOR at no cost to the OWNER. Valves shall be set plumb. Valve boxes shall be centered on the valve. Earth fill shall be carefully tamped around each valve box to a distance of four (4) feet on all sides of the box or to the undisturbed trench face if less than four (4) feet. Valves shall not be located in tillable fields or areas where agricultural practices pose the possibility of damaging the valves and/or valve boxes.

57.08 AIR RELEASE VALVES

Air release valves shall be installed as shown on the drawings in the chemical feed system. Valves shall have one (1) inch inlet and outlet and shall be so designed as to permit the release of a large quantity of air during the filling and priming of the chemical feed system The unit shall operate independently and release small accumulations of air which may collect while the line is in operation and working under pressure. Valves shall have PVC bodies and be furnished with national pipe threads. Floats and trim shall be of a non-corrosive metal when subjected to the sodium hypochlorite, ammonia, or phosphates. Seats shall be of a material which will provide cushion for the float sufficient to receive float shock upon closing.

57.09 PLUGS

Standard plugs shall be inserted into the bells of all dead end pipes, tees, or crosses. Spigot ends shall be capped.

57.10 TRACER WIRE

Tracer wire shall be installed with **all water mains and service lines** (up to the service

meter). The tracer wire shall be a minimum of 14 AWG and have a minimum tensile strength of 250 lbs. The wire shall be "Copperhead" Reinforced Tracer Wire as manufactured by Copperhead Industries, LLC, Monticello, MN 55362 or equal. The tracer wire shall have a High Density Polyethylene (HDPE) outer coating, an inner hi-carbon steel core with a corrosion resistance copper layer metallurgically bonded to the hi-carbon steel core. The outer coating shall be blue conforming to the APWA uniform color code. Note: copper wire with THWN outer coating will not be allowed.

The tracer wire used through **all bores** shall be a minimum of 12 AWG and have a minimum tensile strength of 1150 lbs. The wire shall be "Copperhead" Reinforced Directional Drilling Tracer Wire or equal. The wire through all bores should be checked for contiguity before connecting the wires together.

The tracer wire shall be connected to all valves and brought up into each valve box, and shall be connected to all hydrants and service meter pits. **Tracer wire shall be incidental to the project cost.** All couplings shall be made using the underground epoxy filled splice kits as approved by the manufacturer of the tracer wire supplied. The gel filled wire nuts will not be allowed. Testing shall be done by the ENGINEER/OWNER, and the CONTRACTOR shall repair or replace any tracer wire at the CONTRACTOR's expense should testing show the area inoperable, including directionally bored water main.

57.11 TAPPING SLEEVES

Tapping sleeves shall be all stainless steel per ASTM A240, Type 304 with the exception of the flange, which may be epoxy-coated ductile iron per ASTM A536. The sleeves shall be corrosion resistant, lightweight, and provide a full circumferential seal. A stainless steel test plug shall also be provided as part of the sleeve for pressure testing prior to tapping the pipe. Tapping sleeves shall be Romac Industries, Inc. "SST" Tapping Sleeve, or equal.

57.12 VALVE MARKERS

Each valve shall have a valve marker installed next to the valve. The marker shall be as manufactured by Carsonite or equal. The marker shall include the water company name and emergency response number as approved during shop drawing review. The marker MUST be far enough away to allow the use of a valve wrench.

57.13 METER BOX AND COVER

The CONTRACTOR shall furnish and install a meter box as shown on the Drawings and as approved by the ENGINEER. The meter box shall be 42 inches deep with an inner diameter of 20 inches, PVC construction, and supported on a minimum of three (3) bricks.

The meter box cover shall be of Ford Type C, No. C32. No locking device shall be provided. Lids shall overlap the frame.

57.14 BACK PRESSURE VALVES

Each chemical feed system shall have a back pressure valve installed to provide continuous back pressure to the chemical feed pump. The back pressure valve shall act as an anti-siphon valve. The valve shall have an adjustable pressure setting of 10 to 150 psi. The valve shall be set upon installation to 15 psi greater than the system pressure. The valve shall be of PVC construction, NPT (F) connections and have diaphragms compatible with the chemical pumped. The valves shall be Griffco or equal.

57.15 PRESSURE RELIEF VALVES

The pressure relief valves shall be constructed of PVC , have NPT(F) connections and diaphragms compatible with the chemical pumped. The valves shall be Griffco or equal.

Intentionally Blank

MASTER METER STATION

Table of Contents

Section 64

PAGE

64.01 Scope of Work 64-1

64.02 Building and Foundations 64-2

64.03 Interior Water Transmission Components 64-7

64.04 Chemical Feed Equipment 64-11

64.05 Pressure Testing 64-16

64.06 Electrical / Telemetry Work 64-17

64.07 Operation Equipment 64-20

64.08 Protective Coatings 64-21

64.09 Disinfection 64-23

64.10 Start-Up 64-23

64.11 Warranty 64-23

64.12 Generator 64-24

Intentionally Blank

ABOVE-GROUND MASTER METER STATION

Section 64

64.01 SCOPE OF WORK

The CONTRACTOR shall construct an above-ground master meter station, with all the necessary building structure and foundation components, internal and external piping, meters, valves, electrical, controls, and other necessary appurtenances, as shown on the Drawings and as specified herein.

Refer to Section 14 of the Specifications regarding equipment, shop drawings, operation and maintenance manuals, start-up, and coordination criteria. Refer to Section 84 of the Specifications for details regarding the telemetry system.

The equipment furnished shall be designed, constructed, and installed in accordance with current practices and methods and shall operate satisfactorily when installed as shown on the Drawings and operated according to manufacturer's recommendations. The CONTRACTOR shall verify all dimensions and quantities shown on the Drawings for proper fit and function prior to bidding, ordering materials, and constructing the building or station components. Any discrepancies in fit or function shall be brought to the attention of the ENGINEER prior to bid, construction, or installation. In case of conflict between the Drawings and Specifications, the CONTRACTOR shall notify the ENGINEER prior to bidding, to clarify the discrepancy and obtain a decision on which document governs. If the CONTRACTOR or any of their Subcontractors fail to notify the ENGINEER prior to bidding regarding either of the above items, then the CONTRACTOR shall provide and install the intended material or equipment at no additional cost to the Contract Price.

The Telemetry/ SCADA system shall be installed by the OWNER's SCADA Contractor. The CONTRACTOR shall coordinate the overall system with the OWNER's SCADA Contractor. Any/all peripheral equipment that is to be electrically-connected to the Telemetry system, but is to be provided by non-Telemetry contractors/subcontractors/suppliers must be compatible with the Telemetry system. The responsibility to assure compatibility rests with the CONTRACTOR. In order to assure compatibility with the Telemetry system, the CONTRACTOR shall provide shop drawings to the OWNER's SCADA Contractor for approval of all peripheral equipment that is to be electrically-connected to the Telemetry system.

Prior to shop drawing submittal and again prior to the start of construction, the CONTRACTOR and all necessary representatives of the equipment manufacturers (meters, scales, etc.) shall meet with the SCADA Contractor to coordinate the equipment to be used and the location requirement of all electrical/telemetry equipment. ENGINEER and OWNER shall be notified of meeting date. Meeting minutes and attendance records of all meetings shall be supplied to the OWNER and ENGINEER.

The CONTRACTOR's prices for the major meter station components shall be categorized according to the Bid Form. All electrical equipment and labor necessary for a complete and working system shall be included by the CONTRACTOR among the various Bid Items listed in the Bid Form. Moreover, the CONTRACTOR shall include all costs associated with coordinating the electric controls with the SCADA contractor's Telemetry equipment to insure a complete and working system.

64.02 BUILDING AND FOUNDATIONS

A. General Requirements

The CONTRACTOR shall field-erect an above-ground concrete block structure with a spread footing foundation, and a concrete slab floor, as shown on the Drawings. The CONTRACTOR is responsible for coordination of the plan dimensions of the foundations to match the plan dimensions of the building walls.

The CONTRACTOR shall verify that building foundations and below-ground piping locations will not be in conflict, prior to construction. Any conflicts shall be brought to the attention of the OWNER and ENGINEER prior to construction or installation.

All piping passing through the floor or walls of the meter station building shall utilize wall sleeves with a Calpico Pipe-Linx, or equal. Stainless Steel hardware shall be used when going in or out of the Hypochlorite chemical feed rooms.

All color schemes, both interior and exterior shall be decided by the OWNER.

B. Structural Design Requirements:

1. Framing information shown is minimum requirements. Additional bracing for gravity and lateral loads, not shown, may be required based on manufacturer's calculation and standard details.

2. Design Requirements:

Building Code	IBC 2006
Roof Live Load	= 20 PSF
Dead Load	= weight of indicated construction (Minimum 10 PSF)
Ground Snow Load	= 25 PSF
Basic Wind Speed	= 90 MPH
Wind Importance Factor	= 1.0
Wind Exposure	= C
Wind Design Pressure	= -12.5 PSF
Peak Velocity Acceleration	= 0.12
Peak Acceleration	= 0.10
Seismic Site Class	= D

Seismic Design Category	= D
Soil Profile Type	= Unknown.
Use Site Coefficient	= 2.0
Structural System	= load bearing walls with reinforced masonry shear walls
Method of Analysis	= Equivalent Lateral Force Procedure

3. Design Soil Pressure for Foundations:

   2000 PSF Continuous Footings (see Soils Report, Section 111 of these Specifications).

   The CONTRACTOR shall have an independent soils consultant verify that the foundations subgrade meets or exceeds the recommendation of the geotechnical report, and shall be incidental to the Contract Price.

C. Concrete Design

1. Applicable Code: Concrete construction shall conform to the current edition of the American Concrete Institute's Building Code (ACI 318); form work shall conform to ACI 347.

2. Refer to Section 21 of the Specifications regarding concrete test requirements.

3. Design Stresses:

   a. Cast in Place Concrete:

      1) Footings, Foundation walls, & others: F'c = 3,500 psi at 28 days.
      2) Slabs: F'c = 4,000 psi at 28 days.

4. Reinforcing Steel:

   a. Reinforcing steel shall be in accordance with ASTM A615 Grade 60. Welded wire fabric shall be in accordance with ASTM A1064 Smooth Wire, 60 KSI minimum yield.

   b. All detailing, fabrication and erection of reinforcing bars, unless otherwise noted, shall be in accordance with "Details and Detailing of Concrete Reinforcement" (ACI 315), current edition.

   c. Splices of reinforcing steel bar shall be in accordance with ACI 318. The length of lap splice of bars of different diameter shall be based on the smaller diameter. Lap wire fabric a minimum of one (1) full wire space plus two (2) inches at ends and sides, unless shown or noted otherwise.

d. Reinforcing steel protection (to main reinforcing): Bottom of footings - 3 inches, beams, columns, & walls - 1-1/2 inches, slabs - 3/4 inch, unless noted.

5. Chamfers: Except as otherwise required, exposed concrete corners and edges shall have 3/4" chamfers. Re-entrant corners shall not have fillets.

6. Weakened plane control joints shall be placed at 15 feet maximum spacing in exterior slabs. Location of all construction joints other than shown on the Drawings shall be approved by the ENGINEER.

7. Anchor bolts for securing wood-framed walls to concrete foundation shall be ½-inch diameter minimum, mild steel with a 2-inch minimum right angle hook. Length shall be as shown on Drawings. Anchor bolts shall be supplied with hex nuts and flat washers. Anchor bolts shall be set accurately in position while concrete is still wet. Care shall be taken to work the anchor bolt into the concrete to ensure a good bond between the concrete and the anchor bolt.

D. Reinforced Concrete Masonry

1. Design Code: Reinforced concrete masonry construction shall conform to the latest edition of the "Building Code Requirements for Masonry Structures" (ACI 530) and "Specification for Masonry Structures" (ACI 530.1).

2. Masonry units shall conform to ASTM C90, Type 1, Grade N. All same size concrete masonry units (CMU) shall be of same weight. The minimum average net-area compressive strength shall be 2800 psi for all load bearing masonry walls.

3. Mortar shall conform to the requirements of ASTM C270, Type S; grout for filling cores of CMU shall conform to ASTM C476 (2,500 psi at 28 days). Integral water repellant mortar shall be used for split-faced CMU.

4. Exterior joint reinforcing and exterior anchoring devices shall be hot-dipped galvanized. Prefabricated corner and T-Wall Reinforcing shall be used.

5. Horizontal joint reinforcing shall be continuous around all corners and intersections and shall lap six (6) inches minimum at splices. All details shall conform to manufacturer's recommendations.

6. Core fill masonry wall block units below grade. Vertical reinforcing per notes, details and schedules. Vertical bars to extend seven (7) inches into bond beams. Dowel to foundation wall, to match verticals.

7. Unless shown otherwise, all steel and masonry lintels shall bear eight (8) inches minimum at each end on solid grouted cores.

8. All 8-inch masonry bond beams shall have two (2) No. 4 bars horizontal unless noted otherwise. Bars are to be placed near bottom and be completely embedded in grout. Anchor bolts are to hook around horizontal bond beam reinforcing.

9. The CONTRACTOR shall check squareness and levelness of the blocks/row at a minimum of every three rows.

E. Wood

1. Plywood sheathing

   a. Roof sheathing shall be 5/8" structural II CDX (bonded with exterior glue).

   b. Wall sheathing shall be 1/2" minimum structural II CDX (bonded with exterior glue).

   c. Sheathing shall be nailed with 8d nails at six (6) inches O.C. at boundaries and panel edges and 12 inches at intermediate supports.

2. All dimension lumber shall be kiln dried and bear the grade mark of the grading authority.

   a. Studs and blocking shall be #2 Southern Pine, #2 Douglas Fir-Larch, #2 Spruce-Pine-Fir or better and shall meet the following requirements:

   $F_b = 850$ psi min
   $F_c = 725$ psi min (parallel to grain)
   $E = 1.3 \times 10^6$ psi min

   b. Perimeter plates and all members in contact with concrete or masonry shall be pressure treated, #2 Southern Pine, #2 Douglas Fir-Larch or better and shall meet the following requirements:

   $F_B = 1{,}250$ psi (single member)
   $F_B = 1{,}450$ psi min. (repetitive member)
   $F_v = 95$ psi
   $F_c = 565$ psi (perpendicular to grain)
   $F_c = 1{,}050$ psi (parallel to grain)
   $E = 1.6 \times 10^6$ psi

3. Wood Trusses

   a. Roof truss top and bottom chords shall be #1 Southern Pine or better. Webs

shall be #2 Southern Pine or better.

b. Wood trusses shall meet the design requirements with no reduction in live, snow or wind load allowed.

c. Roof truss design shall be by a structural engineer licensed in the State of Illinois. Use metal plate type connections. Comply with the loads given in 64.02.B. "Structural Design" above. Combine loads per ASCE 7.

d. CONTRACTOR shall submit individual truss design sheets and dimensioned plan view drawing showing truss layout. Each sealed by a structural engineer licensed in the State of Illinois.

e. Verify existing roof slopes and dimensions prior to fabricating trusses.

f. Install in strict compliance with HIB-91 by the Truss Plate Institute.

F. Architectural

Doors shall be as shown on the Drawings. Door hardware shall be completely of aluminum including panic hardware, hinges, hinge pins, door closers, thresholds, and screws and fasteners. Doors shall be supplied with weather stripping and a wiper gasket.

Fiberglass reinforced plastic (FRP) board shall be installed as the finished wall and ceiling surface where indicated. These panels shall be butted together and installed using FRP moldings and fasteners (no metal fasteners, screws, or nails allowed). Likewise, where the panels intersect a wall, ceiling, or floor, FRP moldings shall be employed. In chemical feed rooms at the intersection of FRP panels to adjacent panels, the walls, etc., the moldings, fasteners, and the edge of the panels shall be caulked continuously with a two-component, 100% solids, thixotropic, non-sag caulk (color white) to prevent the migration of chemical fumes out of the room.

Anti-slip safety matting shall be provided on the floor just inside the entry door area, for the floor area near the main piping runs, and for the floor area near the electrical/telemetry panels. Safety matting for the chemical room shall be supplied as well, from the doorway to the main piping run. Floor matting locations and sizes shall be coordinated with the OWNER prior to bidding, and all costs for matting shall be included in the Bid price (Bidders shall plan for at least 80 sq. ft. of matting to be utilized when figuring bids). The matting shall have a textured grip tread on the top surface to prevent slipping, studded surface on the bottom to allow for drainage and prevent creeping, open grid design to allow for drainage and air circulation, and beveled edges to prevent trips. The matting shall be a minimum 7/16-inch thick by 24-inch wide roll, cut to fit and fill the areas, and shall be NoTrax Slip Resistant Drainage Mat, or equal.

G. Plumbing

The building floor shall be adequately sloped in each room to drain towards the floor drain. The floor drains (minimum 4-inch floor drain inlet size as shown on the Drawings) with traps, as necessary, shall be routed to the nearest ditch with an intermediate french drain type pit, as shown on the Drawings. Floor drain piping shall be a minimum of four (4) inches in diameter and be Schedule 40 water quality pipe or better with a minimum pressure rating of 160 psi. All piping, fittings and solvent cement shall bear the NSF seal of approval. The drain pit, for each drain line, shall be a minimum of 24 inches wide by 30 inches deep, filled with two (2) inch gravel and covered with geotextile fabric and a 12 inch soil cap, and span the last 10 feet from the end of the drain pipe to the ditch. The CONTRACTOR shall maintain all necessary clearances between the drain lines and the potable water lines, and use the appropriate classification of water and drain piping, including any necessary dual encasement piping methods, as required by IEPA. All vent and drain piping shall adhere to Illinois State Plumbing Code.

All exterior gravity drainage piping shall be Schedule 40 PVC.

64.03 INTERIOR WATER TRANSMISSION COMPONENTS

A. General

The above ground master meter system shall consist of various piping, valves, and fittings; electrical apparatus; radio telemetry controls; and other appurtenances as shown on the Drawings and as specified herein, to provide a complete and working system.

B. Piping

All interior pressure piping and fittings greater than two (2) inches shall be ductile iron, Class 53, flanged, per AWWA C104, C153, and C115, unless otherwise shown on the Drawings. Interior piping that is two (2) inches or smaller shall be copper. Threaded pipe may be used on connections for piping smaller than two (2) inches. All exterior piping to at least five (5) feet beyond the building perimeter or edge of concrete driveway shall be mechanical joint ductile iron pipe. The piping sizes shall be as shown on the Drawings. Fittings shall be Tyler, U.S., or equal.

Although they may not be specifically shown on the Drawings or called for elsewhere in the Specifications, the CONTRACTOR shall include in their bid price the cost of all fittings, piping supports, and miscellaneous appurtenances needed to provide a secure, workable pipe and valve system. Equipment, piping and other exposed piping shall be supported by concrete pedestals, piers, adjustable pipe supports, thrust restraints, hangers, and tie rods as necessary to insure a stable installation. Adjustable pipe supports or piers shall be arranged to relieve attached equipment of all strain due to the weight of the pipe, fittings, valves, and the contents of the pipe. Pipe supports shall provide lateral or transverse support as well. Pipe supports shall be stanchion saddle type. Hangers shall be adjustable wrought clevis or adjustable wrought ring style. The CONTRACTOR shall

provide a pipe support plan to the OWNER and ENGINEER for approval prior to construction.

Miscellaneous elbows, reducers, and other fittings not specifically shown on the Drawings, but required for proper fit and function, are incidental to the Contract.

C. Service Connections on Internal Piping

All plumbed devices within the station eventually requiring service, such as meters, control valves, pumps, and like equipment, shall be easily removed from the piping by the presence of appropriately placed and sufficient quantity of adaptors and couplings. In lieu of compression couplings, a Uni-Flange or a flanged coupling adapter (FCA) may be used. All compression couplings, Uni-Flanges, and FCA shall include a minimum of two (2) control joint rods with gusset plates.

D. Combination Pressure Gauges

Combination pressure gauges shall be glycerine-filled with a built-in pressure snubber and have 6-inch minimum diameter, clear glass faces. Combination pressure gauges shall be pipe-mounted, as shown on the Drawings. All gauges shall read in both psi and feet of water, with a reading range as shown on the Drawings.

The CONTRACTOR shall install all tapping points and sensing lines for the pressure gauges and pressure transmitters. All tapping points for both wall-mounted gauges, pressure transmitters and pipe-mounted gauges shall include an isolation valve (ball valve) in their design to facilitate maintenance of the sensing line. All taps that serve both gauges and pressure transmitters shall be configured such that the gauge and pressure transmitter will read the same pressure.

E. Sample Tap

A right angle outlet, smooth nose, brass sample tap shall be affixed to the piping where indicated on the Drawings. The sample tap shall contain a brass ball valve (shut-off valve) between the main line and the sample tap, as shown on the Drawings. The sample tap assembly includes a saddle, ball valve, hose bibb, and smooth nosed sample tap.

F. Butterfly Valves

Butterfly valves 3"-20" shall be manufactured by Watts, DeZurick, Henry Pratt Co., or equal, and conform to AWWA Specification C504 except as modified or supplemented herein. Milliken valves will **not** be allowed.

"Bolt-through" style valves will not be allowed. Valves must be flanged, for bolting from both sides, to allow the valve to remain in place when removing piping either upstream or downstream of the valve for maintenance. One piece bodies shall be composed of materials meeting the requirements of ASTM A126, Class B, with added nickel and chromium ("semi-steel"). Valves shall be rated at 200 psi and provide bubble tight shutoff

at differentials up to 200 psi. The rubber seal shall be integral to the valve body, not located on the disk itself. The disk shall have a stainless steel edge.

Valves sized six (6) inches and smaller shall be equipped with a lever operator. Valves sized eight (8) inches and larger shall be equipped with a weather-proof, heavy-duty, gear operator complete with a position indicator.

G. Non-Slam Check Valves

Each pipe run shall include a fully lugged, non-slam check valve. The body of the check valve shall be cast iron. The plug and seat shall be bronze and conform to ASTM B584. The guide bushings shall be brass and conform to ASTM B16. The valve spring and seat retainers shall be stainless steel and conform to ASTM A313. The valve plug shall be guided at both ends by a center shaft integral with the valve plug. Alignment of the center shaft shall be provided by guide bushings. Check valves shall be manufactured by Val-Matic Valve, GA Industries, or equal. Keystone and CLA-VAL valves will **not** be allowed.

H. Gate Valve

Gate valves shall be designed for a minimum water working pressure of 250 psi. Valves shall be resilient wedge, non-rising stem type, and shall be used with the type of pipe and joint to be installed. Gate valves shall have a clear waterway equal to the full nominal diameter of the valve and shall be opened by turning counterclockwise. The operating nut shall have an arrow, cast in the metal, indicating the direction of opening. Each valve shall have the maker's initials, and pressure ratings cast on the body. Prior to shipment from the factory, each valve shall be tested by hydraulic pressure equal to twice the water working pressure.

Gate valves shall have mechanical joints. No "push-on" joints will be allowed. All bolts for the bonnet shall be stainless steel, or approved equal. All bolts for the retained glands shall be stainless steel or corrosion resistant meeting the requirements of AWWA C111/A21.11 and ASTM A242. All gate valves installed inside of the station shall be equipped with hand wheel operators. Gate valves shall conform to AWWA Standards C509 & C550 and be Mueller A-2360, with 'O' ring seals, or equal.

I. Water Meter & Strainer

The master meter station shall include a 3" meter, as shown on the Drawings. The meter shall be flanged with integral test ports, and comply with ANSI and AWWA C702 standards. The meter and miscellaneous appurtenances shall be supplied by Master Meter, Inc. No other supplier will be allowed. The meter shall be equipped to display the flow rate and totalization information digitally on the specified Meter Interface Panels and read in U.S. Gallons. The meters shall be supplied with integral test ports to allow the meters to be tested for accuracy, as needed.

Flow Meter:	Octave Meter, 3-inch
Transmitting Register:	8 Digit Register with Ul1203 encoder open communication module, AMR encoder.

Registers to be factory pre-programmed to provide the RTU with all eight (8) wheel positions. The registers must conform to AWWA Standard C707.

J. Total Chlorine Analyzer

The total/free chlorine analyzer shall be purchased and installed by the CONTRACTOR. The analyzer shall be a colorimetric type and shall be capable of measuring either total or free. The meter shall have ph compensation range of 4 to 9. The minimum flow rate shall be in the range of 0.05 gal/min. The analyzer shall have an analog output, 4-20 mA. The SCADA CONTRACTOR will interface with the analyzer.

K. Service Saddles and Corporation Stops

Service saddles shall be brass, strap-type as required for the size of corporation stop specified, and shall be Ford 202B-1438-CC4, or equal. The tap location for the chemical injectors should be between 7 and 8 O'clock

Corporation stops shall be one (1) inch. The ball valve shall be brass, shall be Ford or Mueller, and have Tapered Thread.

L. Altitude Valve

The Altitude Valve shall be a 3" Advanced V-Control Ball Valve with electric actuation Model F15 with localized PLC set point control or equal. The altitude valve shall be for one way control, filling of the standpipe, and shall be furnished with auxiliary controls to provide pressure sustaining, pressure reduction, rate of flow and check valve function. The valve shall control the high water level in the existing standpipe without the need for floats or other devices.

The altitude valve shall provide pressure sustaining capabilities to the supply side of the water system at all times. It is anticipated that the back pressure sustaining will be set to maintain a minimum of 35 psi on the supplying water system (Fountain Water System).

The altitude valve shall provide pressure reducing capabilities. The valve shall have the capability to reduce the line pressure from a high of 120 psi on the supply side down to a range of 20 psi thru 75 psi., on the discharge side.

The altitude valve shall have rate of flow control. The range of flow control shall be from a minimum of 100 gpm to 300 gpm. The flow shall be capable of being set manually to any range from a minimum of 100 gpm up a maximum of 300 gpm. The flow shall remain constant once set. Initial setting shall be for 100 gpm.

The valve shall be PLC operated and electric controlled.

64.04 CHEMICAL FEED EQUIPMENT

The CONTRACTOR shall supply the chemical feed equipment detailed below. The CONTRACTOR shall install the equipment and interface the chemical feed pumps with the water meter. The CONTRACTOR shall provide all necessary equipment to provide for proper coordination between the water meter and chemical pump control system, based on booster pump flow rate, for a complete and functioning system, and to be included in the Contract Price.

A. Liquid Chlorine Feed System

1. Chemical Metering Equipment

A diaphragm metering pump suitable for metering sodium hypochlorite shall be installed The pump shall be manually adjustable with 10:1 turn down ratio for both stroke rate and length. The pump shall be capable of metering 1.6 gallons per hour against 150 psig maximum injection pressure. The chemical metering pumps shall be equal to LMI Series B, model B11. The pump shall be equipped with an Anti-Siphon Pressure Release Valve.

An additional liquid chlorine pump shall be provided to the OWNER as back-up for chemical injection and all associated costs shall be included in the CONTRACTOR's Bid price.

The pump shall be incorporated with an external control system (wired to a dedicated receptacle) which shall be responsive to the flow rate of water through the station (as monitored by the 3-inch meter). A CPVC Nozzle Assembly with a bronze service saddle, strap-type as required, shall be included. The CPVC Nozzle Assembly mounted to the bottom one-third (1/3) of the water main. The service saddle shall be similar to Mueller or equivalent and as approved by the ENGINEER.

The pump shall be mounted so it is operating under flooded suction.

2. Chemical Tank

A 10 gallon, translucent, polyethylene, seamless, one-piece, molded chemical tank with cover suited for sodium hypochlorite shall be provided by the CONTRACTOR. It shall have excellent chemical and impact resistance, withstand operating temperatures up to 140 degrees F. The tank shall be 13" diameter by 21 inches high and shall as manufactured by Chem-Tainer Polyethylene translucent or equal.

Piping shall be as shown on the drawings and shall be provided by the CONTRACTOR. At a minimum the piping shall include a suction strainer, calibration column, discharge pulsation dampener/air relief valve, pressure gauge, pressure relief valve, back pressure/anti-siphon valve, isolation valves and discharge tubing. A pre manufactured unit such as a USA Blue Book Professional Skid can be utilized as long it can be mounted to the proposed stand. Both the chemical supply drum and the day tank must have the capability of being sealed and vented to the outside.

3. Tank Scale

A non-corroding, low profile, digital weight scale with remote digital weight indicator shall be provided in the chemical room. The scale shall be all stainless steel construction with an epoxy coating. The scale shall have temperature stable, solid-state operation by strain gauge transducer. The scale shall have a mounted indicator with a 5-digit LED. Accuracy shall be ½ of 1%. The indicator shall be housed in a NEMA 4, UL-listed enclosure. The cables connecting the scale to the indicator shall be routed in appropriate sized PVC conduit and be of sufficient length. The indicator shall have a minimum range of 0- 500lbs with Tare weights being programmable. The platform shall be a minimum of 21" in diameter/square, etc. The scale shall have the capability to be connected to the PLC to enable the weight to be continuously recorded.

4. Chemical Spill Containment

A low-profile polyethylene containment unit shall be provided in each chemical room to keep chemicals off of the floor and in containment in case of accidental spillage in each chemical room. The size of the containment unit shall be 20 gallons.

The floor shall be sloped away from the door to the grated sump, as shown on the Drawings. A grated sump shall be constructed in the floor to allow for collection and removal of spilled chemicals or wash down water.

5. Tank Stand

A stand to elevate the tank shall be provided. The stand shall be constructed of rot resistant wood or composite lumber with a platform large enough to hold the tank, spill containment and scale. A concept detail drawing is shown on the drawings. In the event that the contractor desires to build something different then as detailed shop drawings shall be submitted for approval. Detail framing has not been shown.

6. Transfer Pump

One PVDF drum pump shall be furnished for transferring the sodium hypochlorite from the supply drum to the day tank. The pump shall be 0.5 hp, 120 vac, TEFC

motor with a 40" PVDF pump tube. The pump assembly shall be furnished with a 1" PP dispensing nozzle with flow control, PP foot strainer, static protection kit and 1" ID clear PVC tubing.

B. Ammonia Feed System

1. Chemical Metering Equipment

A diaphragm metering pump suitable for metering ammonium sulfate (liquid ammonia) shall be installed. The pump shall be manually adjustable with 10:1 turn down ratio for both stroke rate and length. The pump shall be capable of metering 1.6 gallons per hour against 150 psig maximum injection pressure. The chemical metering pumps shall be equal to LMI Series B, model B11. The pump shall be equipped with an Anti-Siphon Pressure Release Valve.

An additional ammonium sulfate (liquid ammonia) pump shall be provided to the OWNER as back-up for chemical injection and all associated costs shall be included in the CONTRACTOR's Bid price.

The pump shall be incorporated with an external control system (wired to a dedicated receptacle) which shall be responsive to the flow rate of water through the station (as monitored by the 3-inch meter). A CPVC Nozzle Assembly with a bronze service saddle, strap-type as required, shall be included. The CPVC Nozzle Assembly mounted to the bottom one-third (1/3) of the water main. The service saddle shall be similar to Mueller or equivalent and as approved by the ENGINEER.

The pump shall be mounted so it is operating under flooded suction.

2. Chemical Tank

A 10 gallon, translucent, polyethylene, seamless, one-piece, molded chemical tank with cover suited for ammonium sulfate (liquid ammonia) shall be provided by the CONTRACTOR. It shall have excellent chemical and impact resistance, withstand operating temperatures up to 140 degrees F, and have graduated markings for every one (1) gallon on the side of the tank.

Piping shall be provided by the CONTRACTOR in order that the new container drum shall have the capability of being sealed and vented to the outside, to be coordinated with the OWNER.

3. Tank Scale

A non-corroding, low profile, digital weight scale with remote digital weight indicator shall be provided in the chemical room. The scale shall be all stainless steel construction with an epoxy coating. The scale shall have temperature stable, solid-state operation by strain gauge transducer. The scale shall have a mounted

indicator with a 5-digit LED. Accuracy shall be ½ of 1%. The indicator shall be housed in a NEMA 4, UL-listed enclosure. The cables connecting the scale to the indicator shall be routed in appropriate sized PVC conduit and be of sufficient length. The indicator shall have a minimum range of 0-500 lbs with Tare weights being programmable. The platform shall be a minimum of 21" in diameter.

4. Chemical Spill Containment

A low-profile polyethylene containment unit shall be provided in each chemical room to keep chemicals off of the floor and in containment in case of accidental spillage in each chemical room. The size of the containment unit shall be 20 gallons.

The floor shall be sloped away from the door to the grated sump, as shown on the Drawings. A grated sump shall be constructed in the floor to allow for collection and removal of spilled chemicals or wash down water.

5. Tank Stand

A stand to elevate the tank shall be provided. The stand shall be constructed of rot resistant wood or composite lumber with a platform large enough to hold the tank, spill containment and scale. A concept detail drawing is shown on the drawings. In the event that the contractor desires to build something different then as detailed shop drawings shall be submitted for approval. Detail framing has not been shown.

6. Transfer Pump

One PP drum pump shall be furnished for transferring the sodium hypochlorite from the supply drum to the day tank. The pump shall be 0.5 hp, 120 vac, TEFC motor with a 40" PP pump tube. The pump assembly shall be furnished with a 1" PP dispensing nozzle with flow control, PP foot strainer, static protection kit and 1" ID clear PVC tubing.

A. Phosphate Feed System

1. Chemical Metering Equipment

A diaphragm metering pump suitable for metering sodium hypochlorite shall be installed The pump shall be manually adjustable with 10:1 turn down ratio for both stroke rate and length. The pump shall be capable of metering 1.6 gallons per hour against 150 psig maximum injection pressure. The chemical metering pumps shall be equal to LMI Series B, model B11. The pump shall be equipped with an Anti-Siphon Pressure Release Valve.

An additional chemical pump shall be provided to the OWNER as back-up for

chemical injection and all associated costs shall be included in the CONTRACTOR's Bid price.

The pump shall be incorporated with an external control system (wired to a dedicated receptacle) which shall be responsive to the flow rate of water through the station (as monitored by the 3-inch meter). A CPVC Nozzle Assembly with a bronze service saddle, strap-type as required, shall be included. The CPVC Nozzle Assembly mounted to the bottom one-third (1/3) of the water main. The service saddle shall be similar to Mueller or equivalent and as approved by the ENGINEER.

The pump shall be mounted so it is operating under flooded suction.

2. Chemical Tank

A 10 gallon, translucent, polyethylene, seamless, one-piece, molded chemical tank with cover suited for phosphate shall be provided by the CONTRACTOR. It shall have excellent chemical and impact resistance, withstand operating temperatures up to 140 degrees F. The tank shall be 13" diameter by 21 inches high and shall as manufactured by Chem-Tainer Polyethylene translucent or equal.

Piping shall be as shown on the drawings and shall be provided by the CONTRACTOR. At a minimum the piping shall include a suction strainer, calibration column, discharge pulsation dampener/air relief valve, pressure gauge, pressure relief valve, back pressure/anti-siphon valve, isolation valves and discharge tubing. A pre manufactured unit such as a USA Blue Book Professional Skid can be utilized as long it can be mounted to the proposed stand. Both the chemical supply drum and the day tank must have the capability of being sealed and vented to the outside.

3. Tank Scale

A non-corroding, low profile, digital weight scale with remote digital weight indicator shall be provided in the chemical room. The scale shall be all stainless steel construction with an epoxy coating. The scale shall have temperature stable, solid-state operation by strain gauge transducer. The scale shall have a mounted indicator with a 5-digit LED. Accuracy shall be ½ of 1%. The indicator shall be housed in a NEMA 4, UL-listed enclosure. The cables connecting the scale to the indicator shall be routed in appropriate sized PVC conduit and be of sufficient length. The indicator shall have a minimum range of 0- 500lbs with Tare weights being programmable. The platform shall be a minimum of 21" in diameter/square, etc. The scale shall have the capability to be connected to the PLC to enable the weight to be continuously recorded.

4. Chemical Spill Containment

A low-profile polyethylene containment unit shall be provided in each chemical

room to keep chemicals off of the floor and in containment in case of accidental spillage in each chemical room. The size of the containment unit shall be 20 gallons.

The floor shall be sloped away from the door to the grated sump, as shown on the Drawings. A grated sump shall be constructed in the floor to allow for collection and removal of spilled chemicals or wash down water.

5. Tank Stand

A stand to elevate the tank shall be provided. The stand shall be constructed of rot resistant wood or composite lumber with a platform large enough to hold the tank, spill containment and scale. A concept detail drawing is shown on the drawings. In the event that the contractor desires to build something different then as detailed shop drawings shall be submitted for approval. Detail framing has not been shown.

6. Transfer Pump

One PP drum pump shall be furnished for transferring the sodium hypochlorite from the supply drum to the day tank. The pump shall be 0.5 hp, 120 vac, TEFC motor with a 40" PP pump tube. The pump assembly shall be furnished with a 1" PP dispensing nozzle with flow control, PP foot strainer, static protection kit and 1" ID clear PVC tubing.

C. Safety Equipment

The CONTRACTOR shall provide the following safety equipment: eyewash station, gloves, face- shield, apron, and respirator. The eyewash stations will be wall mounted, gravity operated eyewash stations which do no not require plumbing. The CONTRACTOR will be responsible for mounting an eyewash station to the wall of the chemical feed room as shown on the Drawings.

The CONTRACTOR shall install a shelf and/or hook(s) in the chemical feed room for storage of the gloves, apron, face-shield, and respirator. The shelf and/or hook(s) shall be fastened securely to the wall and located in a convenient location to be determined by the OWNER.

64.05 PRESSURE TESTING

When the station plumbing is completed, the pressure piping within the station (including valves, pumps, control valves, fittings, and connections, as make up the entire system) shall be hydrostatically tested as described in the following paragraphs.

All tests and testing equipment shall be provided by the CONTRACTOR at no cost to the

OWNER. Prior to the performance of the test all air shall be expelled from the pipeline to the satisfaction of the ENGINEER. This may be accomplished by means of hydrants or other means. If required, taps shall be made at high points where air relief valves are not called for on the Drawings. Such taps shall be plugged after testing is complete. Pressure test and leakage test procedures should comply with Section 41-2.14 of the *Standard Specifications for Water and Sewer Construction in Illinois*. The leakage test is not an acceptable formal test for passing a water main; only the pressure test is allowable.

A pressure 50 percent in excess of working pressure, as measured at the point of lowest elevation, shall be applied for not less than two (2) hours, and all pipe, fittings, valves, hydrants, and joints shall be carefully examined for defects. Leaking joints shall be remade and then retested.

Removal of Air: In the event air is admitted to the pipeline after being expelled for the hydrostatic tests, such air shall be removed prior to completion of the system and acceptance by the OWNER. The air may be removed by the methods described above. In no case shall the system be placed in operation prior to the removal of the air.

64.06 ELECTRICAL / TELEMETRY WORK

A. General

The electrical design and equipment for the station shall be as described in this section and in Section 82 of the Specifications. The radio telemetry controls for the project shall be as described in Section 84. The telemetry controls panels shall be supplied and installed by the SCADA Contractor. Refer to Sections 14, 82, and 84 of the Specifications regarding coordination with the local electric company.

B. Control System Overview

The SCADA Contractor shall supply and install a monitoring system as required to provide the required information back to the operator and to Fountain Water Company's water treatment plant. The CONTRACTOR's Electrician shall coordinate with the SCADA Contractor as to the interface requirements.

Prior to shop drawing submittal and again prior to the start of construction, the CONTRACTOR and all necessary representatives of the equipment manufacturers (meters scales, etc.) shall meet with the SCADA Contractor to coordinate the equipment to be used and the location requirement of all electrical/telemetry equipment. ENGINEER and OWNER shall be notified of the meeting date. Meeting minutes and attendance records of all meetings shall be supplied to the OWNER and ENGINEER.

The SCADA Contractor shall transmit real-time data and historical trends to the existing Fountain Water District's telemetry equipment at the other stations. Alarms shall be

transmitted to the pre-existing Fountain alarm annunciators via the existing Fountain telemetry radio communication network. The transmission shall also provide real-time data and historical trends to a laptop and smartphone for use by the OWNER.

C. SCADA CONTROL PANEL

1. The SCADA Control Panel shall be 600 volt class suitable for operation on a single-phase, 60-Hertz system. The system operating voltage and number of wires shall be as indicated on the Drawings.

2. The SCADA Control Panel section shall include selector switches, control timers, relays, and pilot lights as shown on the Drawings or specified within this section. All selector switches and pilot lights shall be mounted on the face of the control cabinet door. The SCADA Contractor shall supply a control schematic which will provide all the functions specified later in this section as to the operation of the panel. The SCADA Contractor shall make modifications to shop drawing submittals as necessary to this control schematic to make the supplied equipment function as specified during start up of this meter station. The Control Schematic shall be designed to operate the electronic valve to function as specified here within:

   a. Station Suction Monitoring: A pressure transducer (specified elsewhere) shall be mounted on the station suction line to monitor suction pressure from the Fountain Water District's system. Low pressure in the suction line after a time delay shall close the valve, light an alarm light on the main control panel, and initiate a radio telemetry alarm. Alarm shall reset when the suction pressure is restored.
   b. Station Discharge Monitoring: One pressure transducer shall be mounted on the station discharge line to monitor discharge pressure. Low pressure in the discharge line after a time delay shall open the valve, light an alarm light on the main control, and initiate a radio telemetry alarm. High pressure in the discharge line after a time delay shall close the valve, light an alarm light on the main control, and initiate a radio telemetry alarm.

3. Alarms:

   The following alarms shall be generated and provided to Fountain Water District and the OWNER's telemetry alarm system (laptop and smartphone) via a radio telemetry signal:

   a. Low Pressure Close
   b. High Pressure Close
   c. Pressure Transducer Failure
   d. Telemetry Power Loss
   e. Communication Failure to Maeystown Telemetry Computer

f. Communication Failure to Fountain Water District's Telemetry Computer
g. Low Meter Room Temperature
h. High Meter Room Temperature
i. Low Chemical Feed Room Temperature
j. High Chemical Feed Room Temperature
k. Generator Running
m. Master Meter Room Flood Detect
n. Door Entry Detect

5. Control Panel Equipment:

a. All control switches shall be 22mm oil-tight type as manufactured by ABB CBK, or equal. Contact blocks shall be provided as required and shall be rated for a nominal voltage of 500 vac and nominal current of 10 amp. Contact blocks shall be as manufactured by ABB CBK Series.

b. Relays shall be general purpose plug-in relays with standard mounting configurations. The relays shall have the number of poles as shown on the Drawings. The units shall be NTE R12 Series or equal.

c. Terminal blocks shall be sectional units for channel mounting. Each assembly of blocks shall require one barrier on the open end to provide the required electrical clearance. Each control panel shall be provided with a terminal block for each connection. If power from another panel shall be connected through the terminal block, a fuse shall be provided so the circuit can be isolated. The fuse shall be sized to handle the current needs of the system. The block shall include a fuse puller, as standard. Terminal blocks shall be Entrelec den Rail Series.

d. The pressure transducers shall be of the thin-film polysilicon type that produces a voltage or current change as the input pressure (measured in PSIG) is changed. The following operating characteristics are required:

Operating Temp:	-20 degF to +180 degF
Compensated Operating Temp:	-20 degF to +160 degF
Zero Offset:	1% of Span
Non-Linearity (Incl. Hysteresis):	+/- 0.7%
Hysteresis:	+/- 0.2%
Durability:	100,000,000 cycles 20 to 80% of full scale with negligible performance change

6. Wiring/Terminations:

Wiring shall be NEMA Class I, Type B.

7. Circuit Breakers

   Individual feeder breakers shall have a minimum interrupting capacity of 10 KAIC at rated voltage or as scheduled on the Drawings.

8. Incoming Feeder Terminations and Device

   Incoming cables shall terminate within the control center on a main breaker termination point. Main lug terminations shall have adequate dedicated space for the type and size of cable used and the lugs shall be standard mechanical screw compression type with antiturn feature. Main breakers, if required, shall be as scheduled on the Drawings and be molded case, 80% rated.

9. Enclosures:

   The type of enclosure shall be in accordance with NEMA Standards for Type 12-Vented with gasketed doors. All enclosing sheet steel, wireways and unit doors shall be gasketed.

64.07 OPERATION EQUIPMENT

A. Air Conditioner - Chemical-Feed Room (Ammonia and Chlorine)

1. Wall mounted, and quantity as shown on the Drawings.
2. Rating - 10,000 BTU/HR Air Conditioner.
3. Control - off/constant.
4. UL listed unit, direct-wired.

B. Air Conditioner - Meter Room

1. Thru wall mounted, and quantity as shown on the Drawings.
2. Rating - 12,000 BTU/HR Air Conditioner .
3. Control - off/constant.
4. UL listed unit, direct-wired.

C. Exhaust Fans – Meter and Chemical Feed Rooms

1. Two (2), each installed as shown on the Drawings.
2. Capacity 1600 cfm at 1/8 inch static pressure.
3. Shaded pole blower.
4. 120 volt A.C. operation.
5. UL listed rubber cord.
6. #24 mesh aluminum bug screen incorporated into frame.

The exhaust fans shall have dual control capabilities. Each fan shall have a thermostat controlled switch which will turn the fan either ON or OFF, dependent on a pre-determined set point. In the chemical rooms each fan shall also be capable of operating by a HAND/OFF/AUTO remote fan switch. The fan shall automatically operate if the door is opened, and remain on until it is manually turned off by the switch (i.e., the door closing shall not automatically turn off the exhaust fan), or the fan may be operated manually from outside of the room. The fan switch shall be placed next to the light switch on the building exterior with clear identification marking and be the same as the light switch. Both switches shall be in a weather proof enclosure of the toggle type.

D. Dehumidifier - Pump Room and Chemical-Feed Rooms

1. Two (2), each installed as shown on the Drawings.
2. Minimum capacity 25 pints per 24 hours (AHAM Standard DH-1).
3. Unit shall be mounted on a free-standing rack constructed of steel angle, primed and painted, one (1) ft above finished floor level.
4. Condensate piped direct to exterior of building.
5. 120 volt A.C. operation by dial-controlled adjustable humidistat.
6. UL listed rubber cord.
7. Dehumidifier shall be Dayton Model 39K869, or equal.

E. Propane Heaters

1. Two (2), Propane fueled, each installed as shown on the drawings
2. Each unit shall have a minimum BTU output 75,000 BTU
3. Units shall be hung from the ceiling
4. Circulation fans to be 120 volt A.C. thermostat controlled
5. Two (2) manual set thermostats, one each unit, to be mounted as shown on the drawings.
6. All appearances such as controls, piping, filters, etc. required to make a complete automatic operating installation

E. Louver - Screened and Electrically Actuated

1. Two (2), each installed as indicated on the Drawings.
2. Louver shall be powered open and closed with a 120V AC actuator.
3. Blades shall be extruded aluminum with drainable blades.
4. Louver operation controlled in parallel with the exhaust fan.
5. #24 mesh aluminum screen shall be provided for bug control. Frame of louver shall be 18" x 18".
6. Provide an expanded aluminum bird and rodent screen.

Activation or deactivation of the exhaust fan shall control the operation of the louver. When the fan is called upon to run then the louver shall open. Likewise when the fan is deactivated then the louver shall be closed.

64.08 PROTECTIVE COATINGS

The CONTRACTOR shall paint all piping, valves, and fittings; various architectural items; and the floor, as shown on the Drawings and described below. The paints and paint products are set up as a standard of quality. The usual "or equal" clause shall apply. The products of equivalent quality of other manufacturers may be substituted on approval of the ENGINEER.

The protective coating for all exposed piping, fittings, etc., shall take place immediately after proper preparation of SSPC-SP6 Commercial Blast Cleaning. Prime Coat shall be Tnemec Series 1 Omnithane, or equal, applied at 2.5 to 3.5 mils dry film thickness followed by Tnemec Series N69 Epoxoline II, or equal, applied at 4 to 6 mils dry film thickness consisting of a two-component, high solids, amide-cured epoxy system formulated for high build application having excellent chemical and corrosion resistant properties. The protective coating shall provide in two (2) applications a minimum total dry mil thickness of 8.0 mils. The OWNER shall select the color scheme for the piping, valves, etc.

The protective coating for metal doors, door frames, and lintels shall receive a three part protective coating. The first coat shall be Sherwin Williams DTM Acrylic Primer/Finish Series B66W1, or equal, applied at 2.5 to 5 mils dry mil thickness. The intermediate and final coats shall be Sherwin Williams DTM Acrylic Coating Series B66-200 Semi-Gloss, or equal, with each coat applied at 2.5 to 4 mils dry mil thickness. The OWNER shall select the color.

The protective coating for the concrete floor of the meter station shall be a two-part epoxy coating. The concrete floor shall first be prepared by acid etching, whip blasting, or mechanical shot blasting in accordance with the manufacturer's recommended procedure. The first coat shall be Tnemec Series N69 Hi-Build Epoxoline II, or equal, at 2 to 3 mils dry mil thickness. This sealer coat shall be applied as soon as possible before any installation of the piping, valves, etc. After the installation of the piping, pumps, etc., the floor shall be cleaned per the manufacturer's recommendation and the final two coats applied. The intermediate coat shall be Tnemec Series N69 Hi-Build Epoxoline II, or equal, at 4 to 6 mils dry mil thickness. Non-skid white silica sand shall be added to the intermediate coat as necessary to achieve a non-skid surface, as required by the OWNER. The final floor coat shall be Tnemec Series 291 CRU, or equal, at 2 to 3 mils dry mil thickness. The OWNER shall select the color.

The interior block walls shall receive a three part protective coating. The surfaces shall be cleaned and dry per the manufacturer's recommendation. The first coat shall be Tnemec 130 Envirofill Block Filler, or equal, applied at a spreading rate of 60-80 square feet per gallon. The intermediate and final coats shall be Tnemec Series N69 Hi-Build Epoxoline II, or equal, with each coat at 4 to 6 mils dry mil thickness. The OWNER shall select the color.

The exterior block walls shall receive a four (4) part protective coating. The surfaces shall be cleaned and dry per the manufacturer's recommendation. The first two (2) coats shall be Tnemec Series 633 Prime-A-Pell H2O, or equal, applied at a spreading rate of 50-75 square feet per gallon. The final two (2) coats shall be Tnemec Series 617 Conformal Stain WB, or equal, applied at a spreading rate of 75-100 square feet per gallon.

Machined surfaces, plates, lighting fixtures, and similar items in contact with surfaces to be

painted shall be removed, masked, or otherwise protected prior to surface preparation and painting operations. Nearby surfaces and other items shall also be adequately protected by covering or removing them. In general, any damage caused by the painting operation shall be the responsibility of the CONTRACTOR and they shall properly repair/replace any such damaged items.

64.09 DISINFECTION

The disinfection of the station facilities shall be in accordance with the American Water Works Standards C652 and C653. Disinfection procedure Method 3 of AWWA C652 is not recommended. The CONTRACTOR shall be responsible for disinfecting the facilities and obtaining Illinois Environmental Protection Agency (IEPA) bacteriologic samples clearance. A minimum of two (2) consecutive samples collected from the finished project at least 48 hours apart shall be analyzed and approved by IEPA before placing the pump station into service.

64.10 START-UP

At least one (1) full day of start-up service and training shall be provided at the job site by the CONTRACTOR and the SCADA Contractor for the OWNER, the OWNER's system Operator, and the ENGINEER. The OWNER, Operator, and ENGINEER shall be notified of this proposed date at least five working days prior. The entire system shall be totally operational and free of problems on the start-up / training day. The CONTRACTOR shall also have onsite that day the technicians and/or equipment representatives for the various components that comprise the station (pumps, meters, valves, etc.), as necessary, and any other persons necessary to properly train the OWNER's operations personnel in the complete and proper use, operation, and maintenance of all components of the station. The CONTRACTOR and all other appropriate equipment technicians or representatives shall provide written start-up service reports to the OWNER and ENGINEER regarding the above.

64.11 WARRANTY

The warranty is the responsibility of the CONTRACTOR and the manufacturers and shall cover, at a minimum:

A. A period of one (1) year commencing upon station acceptance (i.e., issuance of Substantial Completion for the entire project) by the OWNER and ENGINEER.

B. The one (1) year period shall be in effect regardless of any component manufacturer's warranty for equipment and components within the station. Verification of this warranty by the manufacturer (or extended warranty) must be submitted with the shop drawings.

C. The warranty shall cover all equipment, components and systems provided in or with the

station.

D. The warranty shall provide for replacement and/or repair of faulty or defective components by the CONTRACTOR and/or the manufacturers at no cost to the OWNER during the warranty period.

Any and all other warranty criteria listed in other Sections of the Specifications shall also apply. Maintenance beyond the one (1) year basic warranty period shall be addressed by the pump and electrical / telemetry supplier in a timely manner.

64.12 GENERATOR

The CONTRACTOR shall furnish one propane fueled 17KW, 240/120VAC single phase generator. Generator package shall include an automatic transfer switch. Generator shall be furnished with an air cooled OHVI/992cc engine. Generator set shall be equipped with a test mode for weekly self testing. Generator set shall have a contact that will be tied into the SCADA to provide a "Running" signal back to the Maeystown operator and Fountain Water District personnel. Generator set shall include a painted steel enclosure. CONTRACTOR to furnish and install mounting, pad, propane fuel lines, wiring, etc. to make a complete installation. OWNER will provide a full propane tank for hooking up to the generator.

ELECTRICAL

Table of Contents

Section 82

PAGE

82.01 Scope of Work 82-1

82.02 Codes and Fees 82-1

82.03 Tests 82-2

82.04 Conduit 82-2

82.05 Wire and Cable 82-3

82.06 Wire Connections and Devices 82-3

82.07 Lighting 82-4

82.08 Pulling Cable - Lubricant 82-4

82.09 Coordination with Local Electrical and Telephone Utilities 82-4

Intentionally Blank

ELECTRICAL

Section 82

82.01 SCOPE OF WORK

Work Included: Furnish all equipment, machinery, labor, materials, apparatus and services necessary to complete the electrical and control system as shown on the Drawings and as described in these Specifications. Also included is all work, services, testing, adjusting, retesting and readjusting as required in order to place into approved satisfactory operation all of the systems shown on the Drawings, called for in the Specifications, as directed by the ENGINEER, and as required by the job conditions.

The CONTRACTOR shall make a complete review of the Drawings and Specifications and bring to the attention of the ENGINEER prior to bidding any additional work that they feel should be included.

The CONTRACTOR for the master meter station will be responsible for coordinating their work and their electrical subcontractor with the OWNER's SCADA Contractor.

Electrical shop drawings that are submitted to the ENGINEER will also be reviewed by the SCADA Contractor for conformance with the SCADA function.

The CONTRACTOR shall provide Record Drawings ("As-Built" Drawings) of schematics of all control panels and major electrical components, and shall include the costs for such in their Bid Price.

82.02 CODES AND FEES

All electrical work shall conform to the National Electric Code (NEC) of the National Fire Protection Association (NFPA) as a minimum standard of quality and performance, as well as the National Electric Safety Code and all local codes.

All electrical materials shall bear the Underwriters Laboratories (UL) label whenever standards have been set and label service is regularly furnished by that agency.

All material shall be installed in accordance with manufacturer's directions. If Drawings or Specifications are contrary to manufacturer's directions, CONTRACTOR will bring this to the attention of the ENGINEER for final decision as to method of installation.

The CONTRACTOR shall obtain and pay for all permits required for the execution of the Work under this Contract. All tests and inspections required by the authorities having jurisdiction will be made by the CONTRACTOR at their expense. The CONTRACTOR shall deliver certificates of all such permits and inspections to the ENGINEER.

Equipment Grounding - Each electrical equipment item in the station shall be properly grounded per Article 250 of the NEC. Items to be grounded include, but are not limited to, pump motor frames, control panel, transformer, receptacles, lights, light switches, exhaust fans, and pressure switches. All ground wires from installed equipment shall be in conduit and shall lead back to the control panel to a copper ground buss specific for grounding purposes and so labeled. The ground buss shall be complete with a lug large enough to accept the installing electrician's bare copper earth ground wire. The bus shall serve as a bond between the earth ground and the equipment ground wires. In addition, site electric service grounding shall be done according to local electric utility requirements.

82.03 TESTS

The complete electrical system will be tested after completion of the Work and reports of the test will be given to the ENGINEER.

Tests will include:

1. Tests for shorts.
2. Tests for open circuits.
3. Voltage test at point furthest from electric service to determine that there is no excessive drop in potential.
4. Test the insulation resistance of the system to ground with a Meggar.

The CONTRACTOR shall correct any abnormal condition found in the electrical system at their expense.

82.04 CONDUIT

Conduit shall be sized to the NEC Requirements for conduit fill, but in no case be less than ½-inch in diameter. The conduit shall also bear the UL inspection label.

Rigid Schedule 40 PVC conduit, sized by the CONTRACTOR to adequately accept the inbound service conductors, and/or telemetry or telephone cables, shall be installed from the interior panels through the floor and/or wall and terminate exterior to the building.

All wiring within the building and outside of the control panel or panels shall be run in Schedule 40 PVC conduit properly supported at a 36-inch maximum spacing, except for the watertight flexible conduit and fittings properly used to connect pump drivers, fan motors, solenoid valves, limit switches, etc., where flexible connections are best utilized. The dehumidifier(s), exhaust fan(s), and air conditioner(s), where furnished by the original manufacturer with a UL approved rubber cord and plug, may all be plugged into their associated receptacles. The heater(s) shall be direct-wired.

In chemical feed rooms conduit shall be rigid, heavy wall, Schedule 40 PVC with solvent weld moisture-proof connections adequately sized to handle the type, number and size of equipment conductors to be carried - in compliance with Article 352 of the NEC and NEMA TC 2, Federal Specification W-C-1094A and Standard UL 651. The conduit shall be properly

supported at a 36-inch maximum spacing.

Flexible Connections - Where flexible conduit connections are necessary, the conduit used shall be liquid-tight, flexible, totally nonmetallic, corrosion resistant, nonconductive, UL listed conduit sized to handle the type, number and size of equipment conductors to be carried - in compliance with Article 356 of the NEC.

All conduit will be swabbed until all moisture and grit are removed before pulling wire.

All exposed conduit shall run parallel to walls.

82.05 WIRE AND CABLE

Minimum size wire is to be #12 except internal 120 volt control wire can be #14. All sizes to be A.W.G.

All low voltage control wire (50 volt or less) shall be solid copper.

All operating voltage wire (120 volt or greater) shall be 600 volt, THWN unless otherwise stated on the Drawings. All wiring shall be stranded.

All wire is to be 98% conductivity copper.

Motor circuit conductors shall be sized by the CONTRATOR for load. All branch circuit conductors supplying a single motor of one (1) horsepower or more shall have an ampacity of not less than 125 percent of the motor full load current rating, dual rated type THWN, as set forth in Article 310.15 and 430 of the NEC for flame retardant, moisture, and heat resistant thermoplastic, copper conductors in a nylon or equivalent outer covering.

Control and accessory wiring shall be sized by the CONTRACTOR for load, type MTW/AWM (Machine tool wire/appliance wiring material) as set forth in Article 310.15 and 670 of the NEC, and NFPA 79 for flame retardant, moisture, and heat resistant thermoplastic, copper conductors in compliance with Association for Manufacturing Technology and as listed by UL (AWM), except where accessories are furnished with a manufacturer supplied UL approved rubber cord and plug.

Power supply wiring and wiring for controls shall be designed for separate conduit runs, or otherwise be physically separated as necessary to avoid any potential electrical interference problems with the two (2) types of wiring. It shall be the CONTRACTOR’s responsibility, at no increase in the Contract Price, to resolve any interference problems of this type.

82.06 WIRE CONNECTIONS AND DEVICES

A. Connectors

All fixture and branch circuit wiring joints, in junction and outlet boxes, shall be made

with UL approved connectors and listed for 600 volts, (1,000 volts when enclosed in fixture or sign), as a pressure cable approved connector. Connector body shall consist of a cone-shaped coil spring insert, insulated with a Phenolic shell which shall be knurled for easy grip and capable of use with a wrench supplied by the manufacturer or with an electrician's pliers.

Connectors shall be Ideal Industries 73B, 74B, or 76B for branch circuit wiring.

B. Receptacles

Duplex, ground fault circuit interrupter industrial grade receptacles shall be furnished about the periphery of the building, with at least one (1) receptacle adjacent to main control panel, as shown on the Drawings. Exterior waterproof receptacles shall be provided as well, as shown on the Drawings. Chemical room receptacles shall be installed at least five (5) feet off the floor to avoid being blocked by chemical drum containers, etc. All receptacle locations shall be coordinated with and pre-approved by the OWNER. Receptacles shall be Hubbel 20A, 125V, GFCI Industrial Grade, or equal.

82.07 LIGHTING

Inside lighting fixtures shall be LED, 48 inch minimum length light fixtures installed within the building, as shown on the Drawings for this item. The fixtures shall be **both** chemical resistant and water resistant. The light switch shall be of the night glow type and be located conveniently adjacent to the main entry. Open fluorescent or incandescent fixtures will not be accepted.

The outside lighting fixture shall be an LED lighting motion sensor kit, installed above the entry doors to the meter room and chemical feed room as shown on the Drawings. It shall be an all metal, heavy duty weatherproof design, with a 240 degree field of view, capable of scanning a 21,000 square foot area. It shall have multiple time and range settings with automatic photocell deactivation during daylight

82.08 PULLING CABLE - LUBRICANT

When necessary to use a lubricant for pulling wires, lubricant must be listed by UL and must be of such consistency that it will dry completely when exposed to air. Lubricant must leave no obstruction or tackiness that will prevent pulling out old wires or pulling in new wires or additional wires, and after drying must leave a film of lubricating wax which will promote easy movement of the wires. No soap flakes, vegetable oils, or ordinary lubricating oil or grease will be permitted in the conduit. Lubricant shall be Ideal Yellow 77, or equal.

82.09 COORDINATION WITH LOCAL ELECTRICAL AND TELEPHONE UTILITIES

As described in Section 14.14, the CONTRACTOR shall coordinate work with the local

electric and telephone utilities, sub-contractors, etc., for providing any necessary electric and telephone services, both temporary and long-term. Before ordering materials and equipment, the CONTRACTOR shall determine from the local utility: who is intended to provide the necessary services for the proposed improvements that the service is available, that the service will be supplied, who is responsible for setting power poles and meter bases, etc. If any changes should be required or any services are unavailable, the CONTRACTOR shall immediately notify the ENGINEER.

The CONTRACTOR shall further determine what service and material is being provided by the local electric and/or telephone utility and what material must be provided by the CONTRACTOR, and shall include all such costs in their bid, in order to produce a complete and properly functioning system. The CONTRACTOR shall determine what cost, if any, will be required for providing the service requested, shall pay all such costs, and shall include all such costs in their bid. The CONTRACTOR shall secure all necessary temporary power and/or telephone for construction of the project (for all trades, subcontractors, etc.), shall pay all such costs, and shall include all such costs in their bid. No additional payments will be allowed.

Intentionally Blank

TELEMETRY

Table of Contents

Section 84

PAGE

84.01 SCADA System Overview 84-1

Intentionally Blank

TELEMETRY

Section 84

84.01 SCADA SYSTEM OVERVIEW

A. General

This section contains general specifications for the SCADA (Supervisory Control and Data Acquisition) work. The intent of these specifications is to provide general information and to provide insight into the coordination requirements that will be necessary to provide a complete operating system by all parties involved.

The SCADA Contractor is responsible for providing all required SCADA equipment, programming, and installation. The delivered SCADA System shall be turnkey. The SCADA work shall consist of a new SCADA RTU (Remote Terminal Unit) installation at the master meter station, provision of a new laptop with the SCADA software to the OWNER and software modifications to the SCADA Server at the Fountain Water District's water treatment plant.

The SCADA improvements shall be covered by a separate construction contract with Fountain Water District's existing SCADA contractor. Fountain Water District's existing SCADA contractor will interface with the CONTRACTORS electrical sub to pick up power obtain the master meter signal interface.

The Fountain Water Districts SCADA provider will be on site and will be working within the construction site boundaries at the same time that the contractor is building the master meter building, installing the piping, etc. Access shall be granted to the SCADA contractor during this time in the form of keys to the master meter building, etc. In no way may the CONTRACTOR detain or block access to the SCADA contractor during the construction phase of the project, however the CONTRACTOR is not required to build the master meter building in any certain way or schedule per the SCADA CONTRACTOR'S desires. The SCADA CONTRACTOR shall take the site as it is available to them.

B. Specified System

In order to reduce system complexity and future maintenance costs, the SCADA System shall consist of a homogeneous integration of equipment, manufactured by a single supplier.

In this phase, the OWNER wishes to add additional compatible telemetry equipment to the existing Fountain Water SCADA System, so that radio telemetry and control will be achieved at the proposed master meter station/standpipe site.

The OWNER shall solicit a proposal from Fountain Water District's existing SCADA contractor for the specific SCADA improvements. At a minimum, the proposal will allow the OWNER and Fountain Water District to remotely operate the proposed master meter station based upon the water level in the Standpipe, and provide building temperature and electrical service status data, all in a format compatible and integrated with the existing SCADA system as previously installed for the Fountain Water District.

SUBSURFACE INVESTIGATION
AND
DESIGN-CONSTRUCTION RECOMMENDATIONS

Table of Contents

Section 111

PAGE

111.01 Note 111-1

Intentionally Blank

SUBSURFACE INVESTIGATION
AND
DESIGN-CONSTRUCTION RECOMMENDATIONS

Section 111

NOTE

There has been no Subsurface Investigation and Design-Construction Recommendations conducted for this project. The size and nature of the small building does not in the owners option warrant an extensive subservice investigation.

Intentionally Blank

PERMITS

Intentionally Blank

COUNTY HIGHWAY PERMIT

Intentionally Blank

MONROE COUNTY, ILLINOIS PETITION AND PERMIT TO CONSTRUCT FACILITIES WITHIN HIGHWAY RIGHT-OF-WAY

TO: County Engineer
100 South Main Street
Room 16
Waterloo, IL 62298

I. PETITION:

In compliance with the requirements of the laws of the State, permission is hereby requested to construct, erect, renew, operate, maintain and remove fixed property, upon, along, across, under and over the public roads, streets, and highways in Monroe County, Illinois; specifically as follows:

Work to be completed -
Installation of 6" Water Main and Master Meter Station

Location -
Across and Along Altes Road

ATTACH LOCATION AND SITE SKETCH

Township, 03S, Range 10W, of the Third Principal Meridian, County of Monroe, Illinois.

Road Authority Road District No. 7

II. PROVISIONS:

The said Petitioner shall furnish material, do all work, pay all costs and shall in a reasonable length of time restore said highway to a condition similar or equal to that existing before the commencement of the described work. It is also understood that this work shall be completed within 360 days after the date of this permit, otherwise the permit becomes null and void. In performing this work the Petitioner shall not interfere with or obstruct traffic on said road. The said Petitioner, his successors or assigns, shall assume all risk and liability for accidents and damages that may occur to persons or property on account of this work. That should the County's or Road District's construction on and operation of said highway or road, within the confines of the existing road right of way, require any alteration or change of location of the work called for in this permit, such alteration or change shall be made by the Petitioner upon written request of the County Engineer or Road District Commissioner, as the case may be, without expense to the said County or Road District, and should the Petitioner fail to make satisfactory arrangements to comply with this request within 60 days, the County or Road District, as the case may be, reserves the right to make such alterations or changes of location or remove the work and the Petitioner agrees to pay for the cost incurred. Except for events arising from or as a result of any gross negligence or willful misconduct, the Petitioner hereby releases the County and/or Road District, their employees, and authorized agents from any liability for future damages to the lines herein provided for due to highway maintenance and construction work. This permit is effective insofar only as the County or Road District has jurisdiction and does not assume to release said Petitioner from compliance with the provisions of any existing statutes relating to the construction of such work.

III. PERMIT CONDITIONS AND RESTRICTIONS:
ATTACHMENT "A"

IV. INSTALLATION DESCRIPTION:
Installation of 6" water main via directional bore under Atles Road.
Site work for master meter station along wwest side of Atles Road on Village of Maeystown property. See attached plan sheet.

This petition is hereby submitted and its provisions agreed to this 18 day of AUGUST, 2016.

ATTEST: Walter T. Cox (Witness) SIGNED: Terry Watster (Petitioner)

Terryl Watster
Petitioner - Printed

Village of Maeystown
Corporation or Public Utility

1030 Mill Street
Address

Maeystown, IL 62256
City State Zip Code

618-458-6566
Phone Number

Fax Number

V. BOND REQUIREMENT – (Ordinance 33-1-1): $_____

VI. ADDITIONAL COMMENTS:

Approved and granted this 6th day of September, 2016.

APPROVED: Don W. Voelker
Highway Authority

ATTACHMENT "A"
HIGHWAY PERMIT CONDITIONS & RESTRICTIONS

1. The PETITIONER, agrees to hold harmless the County of Monroe and its duly appointed agents and employees against any action for personal injury or property damage sustained by reason of the exercise of this permit.
2. The PETITIONER shall furnish all material, do all work, pay all costs and shall in a reasonable length of time restore said highway to a condition similar or equal to that existing before the commencement of the described work as determined by the County Engineer of Monroe County.
3. The PETITIONER shall reimburse the County for any repairs the County deems necessary and undertakes on the existing highway on account of said petition, in case of emergency or neglect by said PETITIONER.
4. The PETITIONER shall conduct the work so as not to interfere with or obstruct traffic on said highway and shall keep said highway open to traffic at all times, except where the permission granted is specifically for the temporary closing of a section of said highway. Traffic on said highway shall be protected by the use of signs, barricades, lights and flagmen as may be required during progress of the work in accordance with the current State of Illinois Manual of Uniform Traffic Control Devices for Highway Construction and Maintenance Operations.
5. Wherever trenches are constructed the PETITIONER shall thoroughly tamp and settle all backfills and fill upper surface of backfill with at least 15 inches of gravel where shoulders, driveways, mail box approaches or side roads have been disturbed and to maintain all trenches until fully settled.
6. The PETITIONER shall remove all excess dirt, shall leave the shoulders, ditches and back slopes in the same presentable condition as before construction, and shall reseed and fertilize all areas where existing sod has been disturbed during the prosecution of the work in accordance with the specifications of the State of Illinois.
7. The PETITIONER shall refrain from using on any bituminous surfaces or bridges any tractor or other machinery equipped with wheel or track lugs that would cause damage to bituminous surfaces. The PETITIONER shall replace and repair any bituminous surfaces damaged during construction as directed by the County Engineer. All facility crossings of bituminous surfaces shall be made by pushing, boring or tunneling underneath all areas supporting the roadway embankment (all areas between roadway ditch flow lines) to a depth which is a minimum of 24 inches below the proposed roadway ditch flow lines unless otherwise permitted by the County Engineer and as otherwise specified herein.
8. Facilities placed below the finished grade shall be a minimum of 12" below the bottom of all interesting tile; 24 inches below all ditch flow lines; 5 feet below minor crossing flow lines including but not limited to crossroad culverts, drainage swales or ditches; and 10 feet below all major crossing flow lines including but not limited to streams or creeks.
9. All facilities shall be installed in a manner which does not interfere in any way with the intended use or function of the highway right-of-way as determined by the County Engineer, which shall include but is not limited to the egress, ingress and flow of traffic and proper drainage.
10. The PETITIONER shall not trim, cut or in any way disturb any trees or shrubbery along said highway without the approval of the County Engineer or his duly authorized representative.
11. This permit is effective in so far only as the County has jurisdiction and does not presume to release said PETITIONER from fulfilling any existing statutes, policies or codes of any other agency or organization, relating to the construction of such improvements. Nor shall it release the applicant from obtaining the necessary easements from the property owner.
12. The County reserves the right to make such changes, additions, repairs, and relocations within its statutory limits to the facilities constructed under this permit or their appurtenances on the right-of-way as may at any time be considered necessary to permit the relocation, reconstruction, widening or maintaining of the highway and/or to provide proper protection to life and property on or adjacent to the County Highway. However, in the event this permit is granted to construct, locate, operate and maintain utility facilities on the County right-of-way, the PETITIONER, upon written request by the County Engineer, shall perform such alterations or change of location of the facilities, without expense to the County, and should the applicant fail to make satisfactory arrangements to comply with this request within a reasonable time, the County reserves the right to make such alteration, change of location or removal of the work, and the applicant agrees to pay for the cost incurred.
13. The use of trucks and/or equipment not of legal load shall be identified by the applicant and approval given by the County Engineer.
14. In any case not covered by above conditions and restrictions the County Engineer is authorized to draw up reasonable conditions and restrictions suitable to the particular case.
15. Insurance will be provided in accordance with **Attachment 'B"** Special Provision for Insurance Endorsement.
16. Per Ordinance 33-1-1 petitioner may be required to post a bond prior to construction.

ATTACHMENT "B"

SPECIAL PROVISION

INSURANCE ENDORSEMENT

The Contractor shall furnish the County a Certificate (or certificates) of Insurance, and shall maintain at all times during the course of this Agreement.

The policy must carry the following endorsement:

> "Monroe County, Illinois, a governmental agency; its elected and appointed officials, officers, agents, and employees, individually and as elected and appointed officials, officers, agents, and employees, in the exercise of their duties relating to the Monroe County Highway Department, and the County Engineer of Monroe County, Illinois, individually and as County Engineer in the pursuit of his duties as County Engineer of Monroe County, Illinois." (as additional insured).

Each Certificate shall state that the County will be given ten (10) days prior notice in the event of cancellation of the policy.

Intentionally Blank

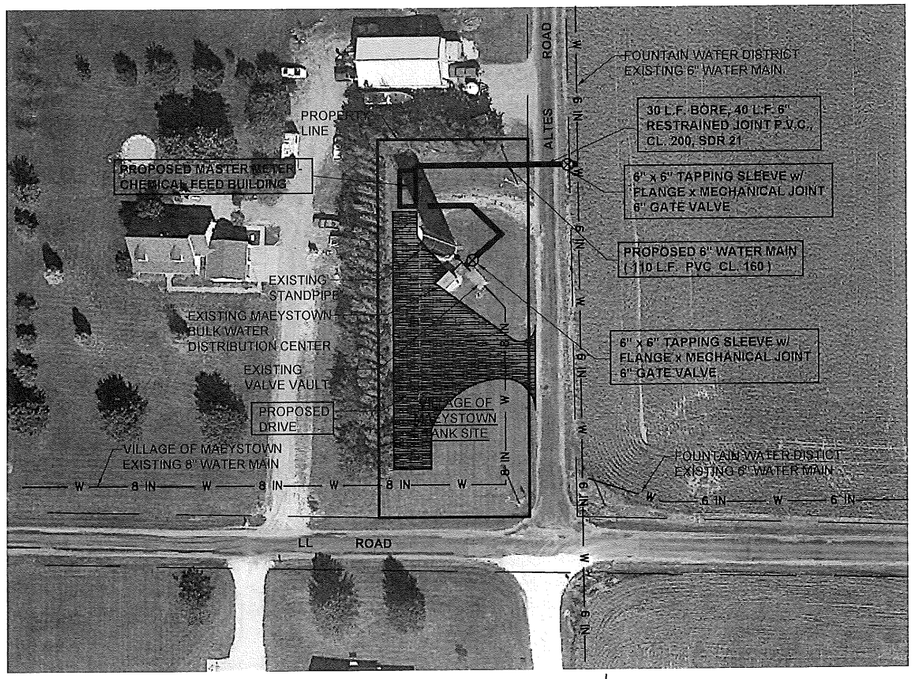

SITE PLAN

50' 0' 50' 100'

GRAPHIC SCALE

N

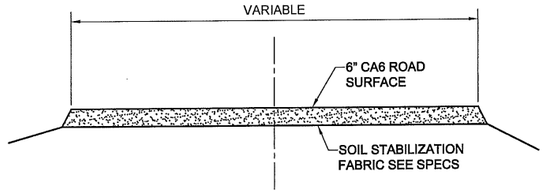

TYPICAL DRIVE DETAIL

SCALE: NONE

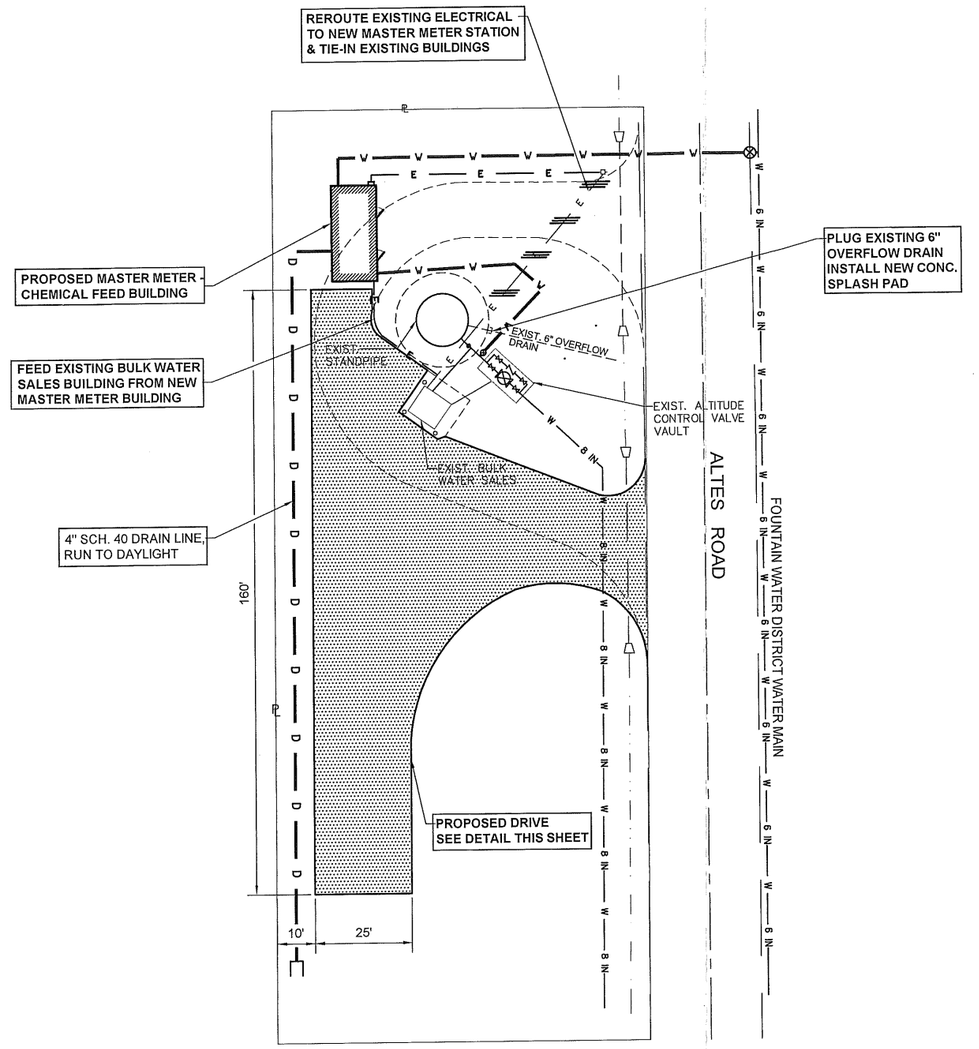

ENLARGED SITE PLAN

20' 0' 20' 40'

GRAPHIC SCALE

N

HENEGHAN & ASSOCIATES, P.C.

ENGINEERS-SURVEYORS

www.haengr.com

DESIGN FIRM NUMBER 184-002692, EXPIRES APRIL 30, 2017

1004 STATE HWY. 16
JERSEYVILLE, IL 62052
P: (618) 498-6418
F: (618) 498-6410

838 EAST McCORD STREET
CENTRALIA, IL 62801
P: (618) 533-6525
F: (618) 533-6652

310A VISION DRIVE
COLUMBIA, IL 62236
P: (618) 281-8133
F: (618) 281-8290

5213 MAE DRIVE, SUITE D
GODFREY, IL 62035
P: (618) 466-8076
F: (618) 466-8078

NO.	DATE	REVISIONS

TANK SITE PLAN

MAEYSTOWN CONNECTION WITH FOUNTAIN WATER DISTRICT

VILLAGE OF MAEYSTOWN
MONROE, ILLINOIS

DRAWN BY:	GRP
CHECKED BY:	WFC
APPROVED BY:	CAO
HORIZONTAL SCALE:	1"=50'
VERTICAL SCALE:	N/A
PROJECT NO.	40038-403
DATE:	8/23/16
SHEET NO.	2

2 OF 7 SHEETS

PATH=v:\shared\clients\40038 - village of maeystown\40038-403 fountain water connection\cad\2 plan sheet.dwg
PLOTTED: 8/23/2016 @ 10:08:38 AM BY phillips, gary

Intentionally Blank

NPDES PERMIT

Intentionally Blank

The project disturbs less than one acre, therefore there is no NPDES CONSTRUCTION PERMIT requirement.

Intentionally Blank

NRCS DRAWINGS

Intentionally Blank

STRAW BALE BARRIER PLAN

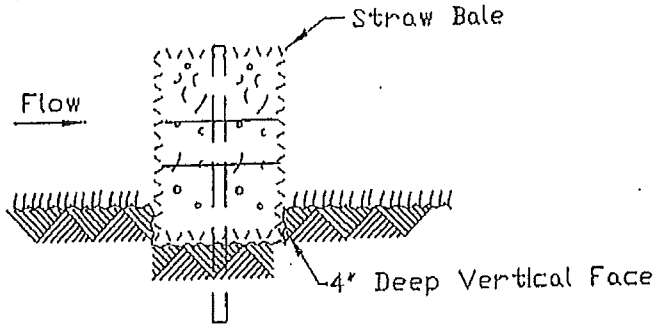

BEDDING DETAIL

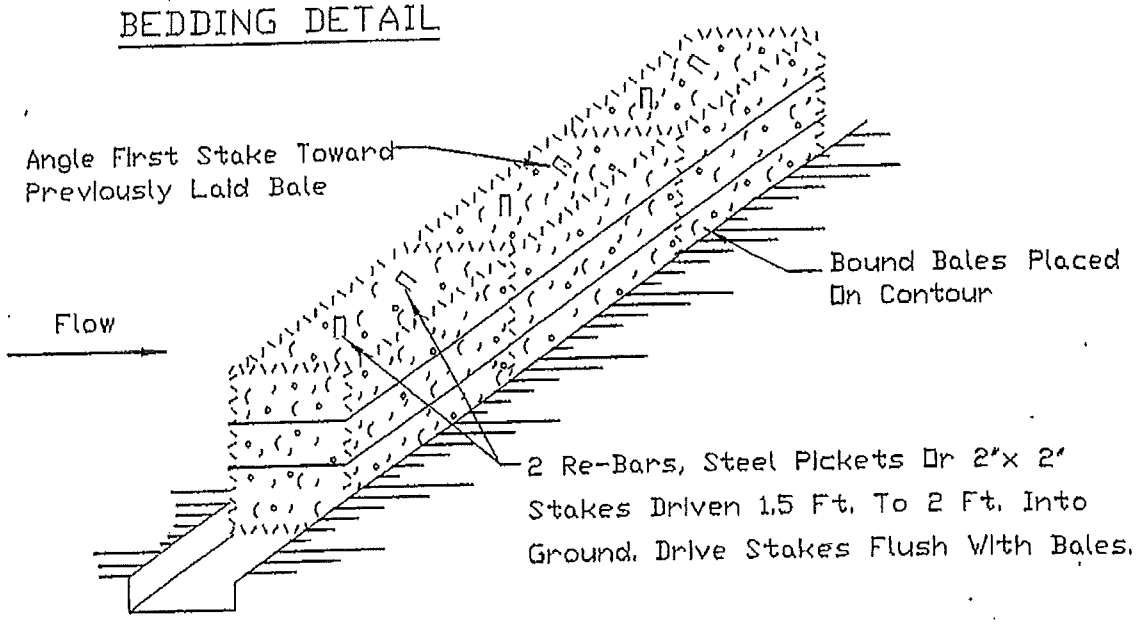

ANCHORING DETAIL

NOTES

1. Bales shall be placed at the top of slope or on the contour and in a row with ends tightly abutting the adjacent bales.
2. Each bale shall be embedded in the soil a minimum of 4", and placed so that bindings are horizontal.
3. Bales shall be securely anchored in place by either two stakes or re-bars driven through the bale. The first stake in each bale shall be driven toward the previously laid bale at an angle to force the bales together. Stakes shall be driven flush with the bale.
4. Inspection shall be frequent and repair replacement shall be made promptly as needed.
5. Bales shall be removed when they have served their usefulness so as not to block or impede storm flow or drainage.

REFERENCE			NRCS Natural Resources Conservation Service	STANDARD DWG. NO. IL-635
Project				SHEET 1 OF 1
Designed		Date		DATE 8-18-94
Checked		Date		
Approved		Date		

Intentionally Blank

SILT FENCE PLAN

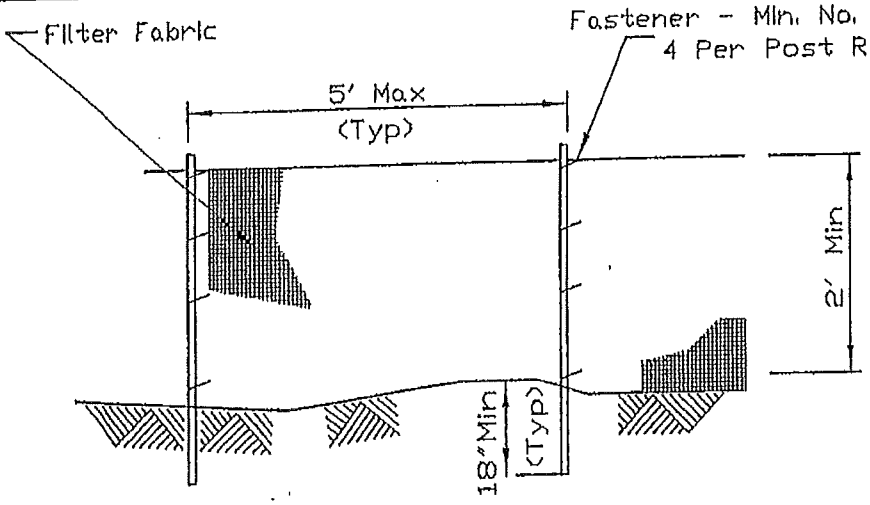

ELEVATION

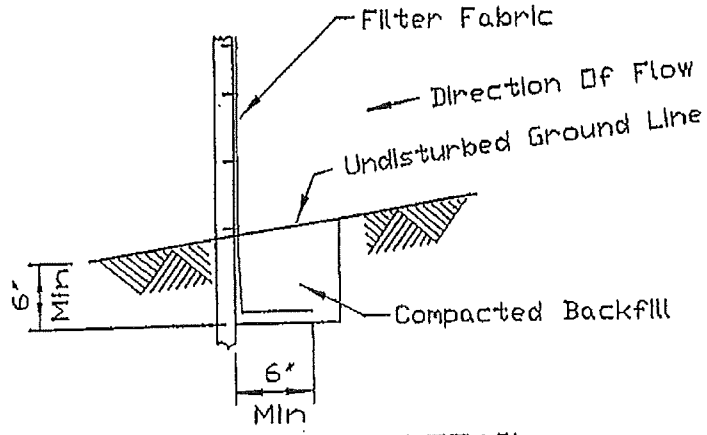

FABRIC ANCHOR DETAIL

NOTES:

1. Temporary sediment fence shall be installed prior to any grading work in the area to be protected. They shall be maintained throughout the construction period and removed in conjunction with the final grading and site stabilization.
2. Filter fabric shall meet the requirements of material specification 592 Geotextile Table 1 or 2, Class I with equivalent opening size of at least 30 for nonwoven and 50 for woven.
3. Fence posts shall be either standard steel post or wood post with a minimum cross-sectional area of 3.0 sq. in.

REFERENCE Project Designed ____ Date ____ Checked ____ Date ____ Approved ____ Date ____	NRCS Natural Resources Conservation Service	STANDARD DWG. NO. IL-620 SHEET 1 OF 2 DATE 11-20-01

SILT FENCE

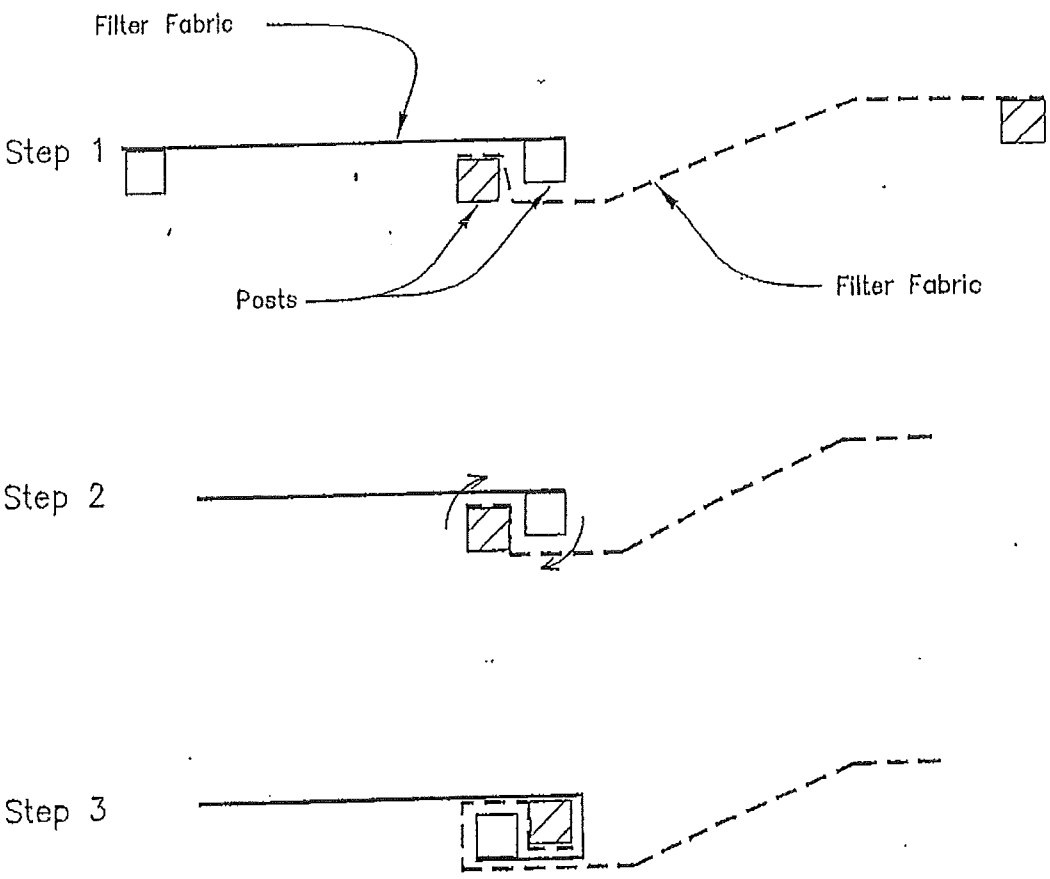

ATTACHING TWO SILT FENCES

NOTES:
1. Place the end post of the second fence inside the end post of the first fence.
2. Rotate both posts at least 180 degrees in a clockwise direction to create a tight seal with the fabric material.
3. Drive both posts a minimum of 18 inches into the ground and bury the flap.

REFERENCE Project Designed Date Checked Date Approved Date	NRCS Natural Resources Conservation Service	STANDARD DWG. NO. IL-620(W) SHEET 2 OF 2 DATE 1-29-98

SILT FENCE WITH WIRE SUPPORT PLAN

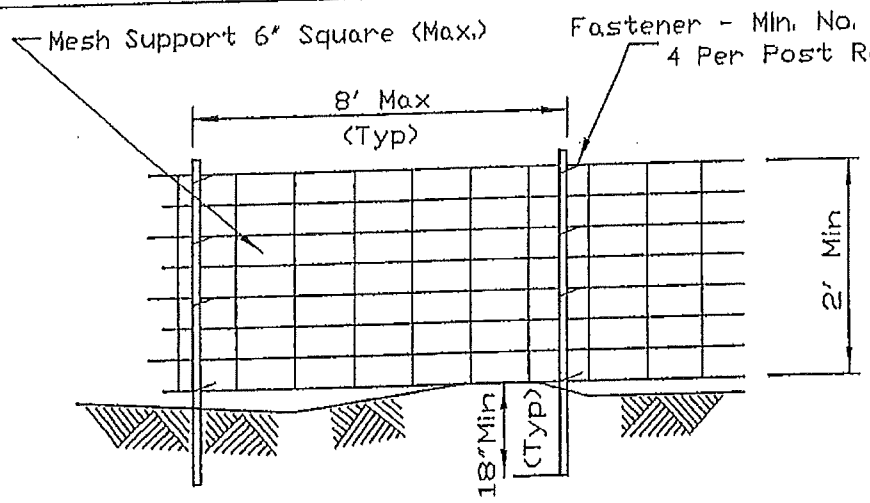

ELEVATION

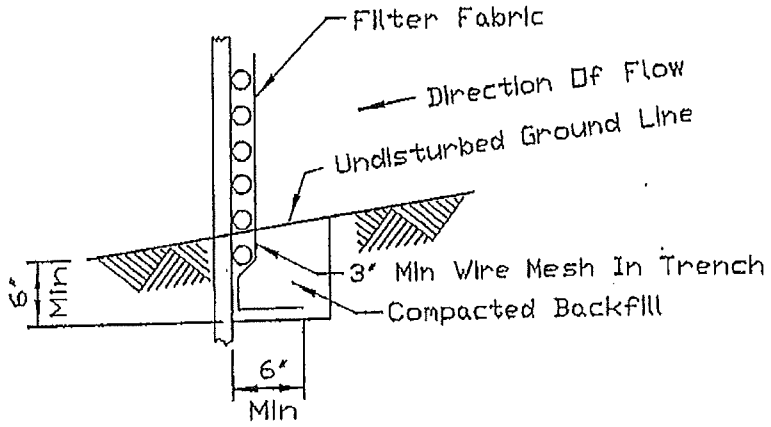

FABRIC ANCHOR DETAIL

NOTES:

1. Wires of mesh support shall be min. gage no. 12.
2. Temporary sediment fence shall be installed prior to any grading work in the area to be protected. They shall be maintained throughout the construction period and removed in conjunction with the final grading and site stabilization.
3. Filter fabric shall meet the requirements of material specification 592 Geotextile Table 1 or 2, Class I with equivalent opening size of at least 30 for nonwoven and 50 for woven.
4. Fence posts shall be either standard steel post or wood post with a minimum cross-sectional area of 3.0 sq. in.

REFERENCE Project _____ Designed _____ Date _____ Checked _____ Date _____ Approved _____ Date _____	NRCS Natural Resources Conservation Service	STANDARD DWG. NO. IL-620W SHEET 1 OF 2 DATE 3-3-95

SILT FENCE

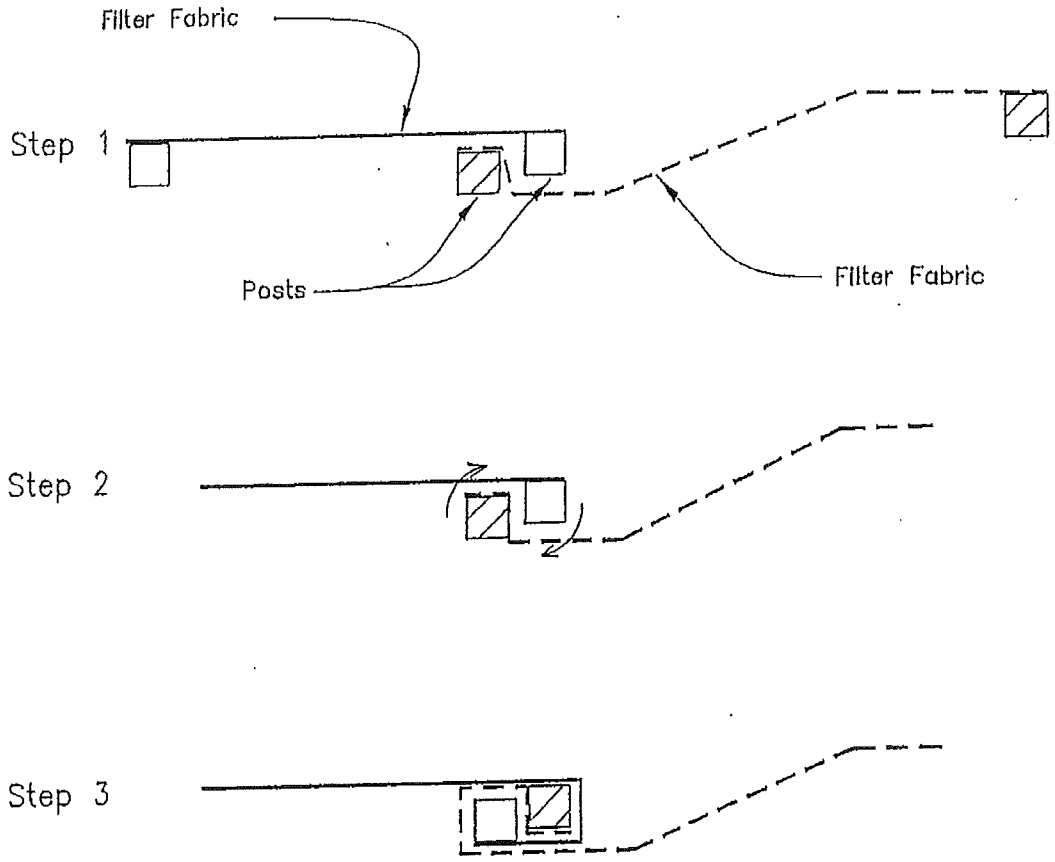

ATTACHING TWO SILT FENCES

NOTES:
1. Place the end post of the second fence inside the end post of the first fence.
2. Rotate both posts at least 180 degrees in a clockwise direction to create a tight seal with the fabric material.
3. Drive both posts a minimum of 18 inches into the ground and bury the flap.

REFERENCE				NRCS Natural Resources Conservation Service	STANDARD DWG. NO. IL-620(W)
Project					SHEET 2 OF 2
Designed		Date			DATE 1-29-99
Checked		Date			
Approved		Date			

EROSION BLANKET PLAN

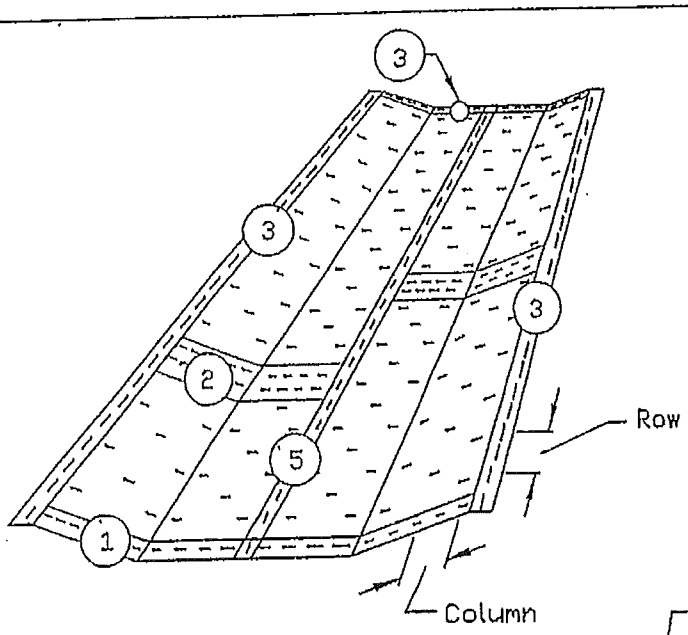

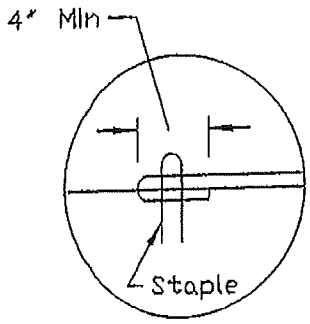

Terminal Fold

Jute Mesh Only

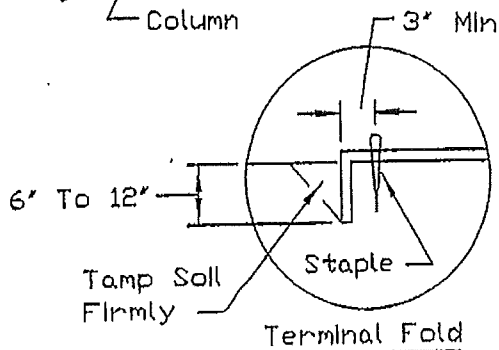

Terminal Fold

Excelsior Blanket

Erosion Control Paper

DETAIL 1

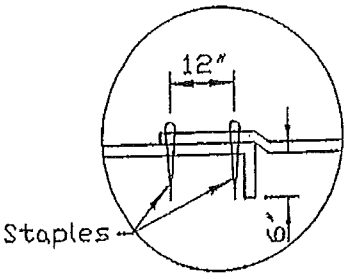

Junction Slot

Jute Mesh

Erosion Control Paper

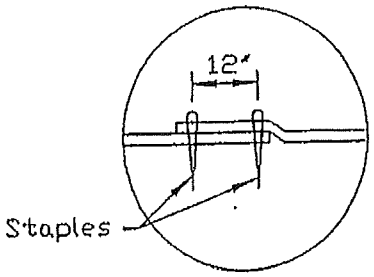

Junction Slot

Excelsior Blanket

DETAIL 2

REFFERENCE			
Project			
Designed		Date	
Checked		Date	
Approved		Date	

NRCS

Natural Resources Conservation Service

STANDARD DWG. NO.

IL-530

SEEET 1 OF 2

DATE 5-24-94

EROSION BLANKET PLAN

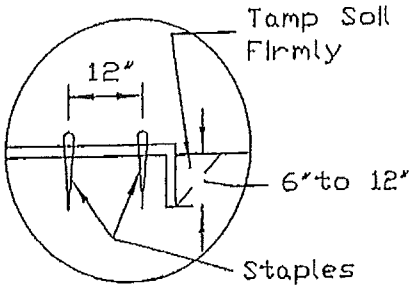

Anchor Slot

Jute Mesh
Excelsior Blanket
Erosion Control Paper

DETAIL 3

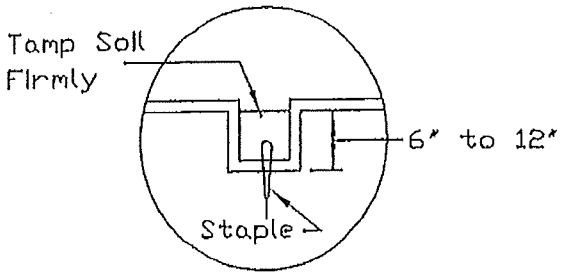

Check Slot

Erosion Control Paper

DETAIL 4

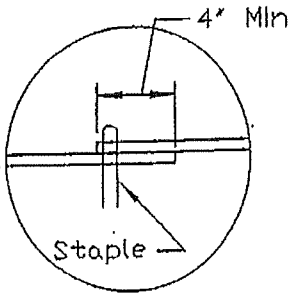

Lap Joint

Jute Mesh
Erosion Control Paper
Excelsior Blanket Shall
Be Butted Together.

DETAIL 5

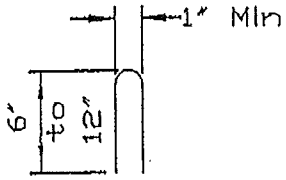

STAPLE DETAIL

NOTES:

1. On erosion control paper, check slots, in ditch channel shall be spaced so that one occurs within each 50' on slopes of more than 4% and less than 6%. On slopes of 6% or more, they shall be spaced so that one occurs within each 25'.
2. Staples are to be placed alternately, in columns approximately 2' apart and in rows approximately 3' apart. Approximately 175 staples are required per 4'x 225' roll of material and 125 staples are required per 4'x 150' roll of material.
3. Erosion control material shall be placed loosely over ground surface. Do not stretch.
4. All terminal ends and transverse laps shall be stapled at approximately 12" intervals.

REFFERENCE Project _____ Designed _____ Date _____ Checked _____ Date _____ Approved _____ Date _____	NRCS Natural Resources Conservation Service	STANDARD DWG. NO.: IL-530 SHEET 2 OF 2 DATE 3-1-95