SET No. _____

SPECIFICATIONS FOR
Phase V System Improvements Ground Storage Tank
Contract "K"
for
Jersey County Rural Water Company
Jersey County, Illinois

PRESIDENT

Allen Davenport

BOARD MEMBERS

David Elliott – Vice President

Michael Wayne Kiel-Treasurer

John Maher-Secretary

Rick Pranger

Cole Snyder

Michael Springman

OPERATOR

Greg Bates

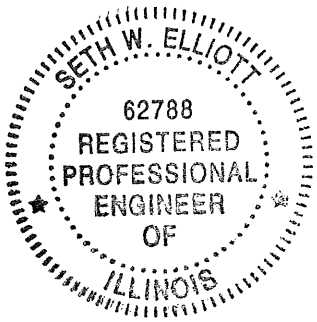

Seth W. Elliott

Seth W. Elliott
Illinois Professional Engineer
No. 62788
Expires: November 30, 2021

Date: May 2021
File: 00139-4100

HENEGHAN AND ASSOCIATES, P.C.
ENGINEERS-SURVEYORS
1004 STATE HIGHWAY 16
JERSEYVILLE, ILLINOIS 62052-2826
(618) 498-6418 FAX (618) 498-6410
Professional Design Firm Registration No. 184-002692
Expires April 30, 2023

Intentionally Blank

Table of Contents

Advertisement For Bids	EJCDC No. C-111 (2013 Edition)
Instructions to Bidders	EJCDC No. C-200 (2013 Edition)
Bid Form	EJCDC No. C-410 (2013 Edition)
Bid Bond	EJCDC No. C-430 (2013 Edition)
Statement of Contractor's Qualifications	EJCDC No. C-451 (2013 Edition)
Certification for Contracts, Grants, and Loans	RD Instruction 1940-Q, Exhibit A-1
Compliance Statement	Form RD 400-6
Non-Collusion Affidavit of Prime Bidder	Form RD
Notice of Award	EJCDC No. C-510 (2013 Edition)
Agreement Between Owner and Contractor(s)	EJCDC No. C-521 (2013 Edition)
Certificate of Owner's Attorney and Agency Concurrence	RUS Bulletin 1780-26, Exhibit I
Engineer's Certification of Final Plans and Specifications	RUS Bulletin 1780-26, Exhibit J
Engineers Certificate of Compliance with AIS	RUS Bulletin 1780-35, Exhibit B
Performance Bond	EJCDC No. C-610 (2013 Edition)
Payment Bond	EJCDC No. C-615 (2013 Edition)
Certification Regarding Debarment, Suspension, Ineligibility and Voluntary Exclusion – Lower Tier Covered Transactions	RD AD 1048
Notice to Proceed	EJCDC No. C-550 (2013 Edition)
General Conditions	EJCDC No. C-710 (2013 Edition)
Prevailing Rate of Hourly Wages (when required)	Supplied by Illinois Department of Labor
Construction Contractors Affirmative Action Goals (%) for Minority and Women Participation	Illinois Instruction 1780, Guide 12
USDA Rural Development Construction Sign	Illinois Instruction 1780, Guide 10
Application for Payment	EJCDC No. C-620 (2013 Edition)
Certified Payroll	CP-1 to CP-2
Partial Lien Waiver	PL-1
Final Lien Waiver	FL-1
Certificate of Substantial Completion	EJCDC No. C-625 (2013 Edition)
Work Change Directive	EJCDC No. C-940 (2013 Edition)
Change Order	EJCDC No. C-941 (2013 Edition)
Field Order	EJCDC No. C-942 (2013 Edition)
General Contractor's Certification of Compliance with AIS	RUS Bulletin 1780-35, Exhibit C
Example of Manufacturers' Certification of Compliance with AIS	RUS Bulletin 1780-35, Exhibit D
Examples of Municipal Castings	RUS Bulletin 1780-35, Exhibit E
Examples of Construction Materials	RUS Bulletin 1780-35, Exhibit F
Examples of Non-Construction Materials	RUS Bulletin 1780-35, Exhibit G
Illinois Department of Agriculture – Construction Standards	SP-1 to SP-12

Technical Specifications

Section 10 – General Information	10-1 thru 10-4
Section 12 – General Requirements	12-1 thru 12-5
Section 21 – Concrete	21-1 thru 21-7
Section 31 – Surface Replacement & Site Work	31-1 thru 31-8
Section 41 – Installation of Water Main & Appurtenances	41-1 thru 41-5
Section 51 – Water Main, Fittings, & Appurtenances	51-1 thru 51-7
Section 72 – Glass Coated Bolted Steel GST	72-1 thru 72-10
IEPA Construction Permit	

Jersey County Rural Water Company
Jerseyville, IL
Phase V System Improvements Ground Storage Tank
Contract K
ADVERTISEMENT FOR BIDS

Sealed Bids for the construction of the Phase V System Improvements Ground Storage Tank Contract "K" will be received, by Greg Bates Operator, at the office of Jersey County Rural Water Company, 1009 State Highway 16, Jerseyville, IL 62052, until 2:00p.m. local time on June 24, 2021, at which time the Bids received will be publicly opened and read. The Project consists of constructing a 200,000 gallon water storage tank, foundation, and related appurtenances.

A Pre-Bid meeting will be held at 10:00a.m. on June 10, 2021 at the office of Jersey County Rural Water Company, 1009 State Highway 16, Jerseyville, IL 62052.

Bids will be received for a single prime Contract. Bids shall be on a lump sum and unit price basis, with additive alternate bid items as indicated in the Bid Form.

The Issuing Office for the Bidding Documents is: Heneghan and Associates, P.C. 1004 State Highway 16, Jerseyville, IL 62052, contact Seth Elliott – 618-498-6418 – swelliott@heneghanassoc.com. Prospective Bidders may examine the Bidding Documents at the Issuing Office on Mondays through Fridays between the hours of 8:00am and 4:30pm and may obtain copies of the Bidding Documents from the Issuing Office as described below.

Bidding Documents also may be examined at Heneghan and Associates, P.C. 1004 State Highway 16, Jerseyville, IL 62052; Southern Illinois Builders Association, 1468 Green Mount Road, O'Fallon, Illinois 62269; Dodge/Agc Plan Room, 6330 Knox Industrial Drive, St. Louis, Missouri 63139; online at Heneghan and Associates Website - http://haengr.com/bid-documents/ and www.dodge.construction.com; the office of Jersey County Rural Water Company, 1009 State Highway 16, Jerseyville, IL 62052, on Mondays through Fridays between the hours of 8:00am and 4:30 pm; and the office of the Engineer, Heneghan and Associates, P.C. 1004 State Highway 16, Jerseyville, IL 62052, on Mondays through Fridays between the hours of 8:00am and 4:30pm.

Bidding Documents may be obtained from the Issuing Office during the hours indicated above. Bidding Documents are available at http://haengr.com/bid-documents/ (as portable document format (PDF) files) for a non-refundable charge of $ 10.00 . Alternatively, printed Bidding Documents may be obtained from the Issuing Office either via in-person pick-up or via mail, upon Issuing Office's receipt of payment for the Bidding Documents. The non-refundable cost of printed Bidding Documents is $ 80.00 per set, payable to "Heneghan and Associates, P.C.", plus a $10.00 non-refundable shipping charge. Upon Issuing Office's receipt of payment, printed Bidding Documents will be sent via the prospective Bidder's delivery method of choice. The date that the Bidding Documents are transmitted by the Issuing Office will be considered the prospective Bidder's date of receipt of the Bidding Documents. Partial sets of Bidding Documents will not be available from the Issuing Office. Neither Owner nor Engineer will be responsible for full or partial sets of Bidding Documents, including Addenda if any, obtained from sources other than the Issuing Office.

Section 746 of Title VII of the Consolidated Appropriations Act of 2017 (Division A - Agriculture, Rural Development, Food and Drug Administration, and Related Agencies Appropriations Act, 2017) and subsequent statutes mandating domestic preference applies an American Iron and Steel requirement to this project. All listed iron and steel products used in this project must be produced in the United States. The term "iron and steel products" means the following products made primarily of iron or steel: lined

or unlined pipes and fittings, manhole covers and other municipal castings, hydrants, tanks, flanges, pipe clamps and restraints, valves, structural steel, reinforced precast concrete, and construction materials.

Bid security shall be furnished in accordance with the Instruction to Bidders. The Diminimis Components, Minor Components, and Pig Iron waives apply to this contract.

Owner: Jersey County Rural Water Company

By: Greg Bates Title: Operator

Date: 05/24/2021

INSTRUCTIONS TO BIDDERS

TABLE OF CONTENTS

Page

ARTICLE 1 – Defined Terms 1

ARTICLE 2 – Copies of Bidding Documents 1

ARTICLE 3 – Qualifications of Bidders 1

ARTICLE 4 – Site and Other Areas; Existing Site Conditions; Examination of Site; Owner's Safety Program; Other Work at the Site 1

ARTICLE 5 – Bidder's Representations 2

ARTICLE 6 – Pre-Bid Conference 3

ARTICLE 7 – Interpretations and Addenda 4

ARTICLE 8 – Bid Security 4

ARTICLE 9 – Contract Times 4

ARTICLE 10 – Liquidated Damages 4

ARTICLE 11 – Substitute and "Or-Equal" Items 4

ARTICLE 12 – Subcontractors, Suppliers, and Others 5

ARTICLE 13 – Preparation of Bid 5

ARTICLE 14 – Basis of Bid 6

ARTICLE 15 – Submittal of Bid 7

ARTICLE 16 – Modification and Withdrawal of Bid 7

ARTICLE 17 – Opening of Bids 7

ARTICLE 18 – Bids to Remain Subject to Acceptance 7

ARTICLE 19 – Evaluation of Bids and Award of Contract 8

ARTICLE 20 – Bonds and Insurance 8

ARTICLE 21 – Signing of Agreement 9

ARTICLE 22 – Sales and Use Taxes 9

ARTICLE 23 – Contracts to be Assigned 9

ARTICLE 24 – Federal Requirements 9

Copyright © 2013 National Society of Professional Engineers, American Council of Engineering Companies, and American Society of Civil Engineers. All rights reserved.

Intentionally Blank

ARTICLE 1 – DEFINED TERMS

1.01 Terms used in these Instructions to Bidders have the meanings indicated in the General Conditions and Supplementary Conditions. Additional terms used in these Instructions to Bidders have the meanings indicated below:

A. *Issuing Office* – The office from which the Bidding Documents are to be issued.

ARTICLE 2 – COPIES OF BIDDING DOCUMENTS

2.01 Complete sets of the Bidding Documents may be obtained from the Issuing Office in the number and format stated in the advertisement or invitation to bid.

2.02 Complete sets of Bidding Documents shall be used in preparing Bids; neither Owner nor Engineer assumes any responsibility for errors or misinterpretations resulting from the use of incomplete sets of Bidding Documents.

2.03 Owner and Engineer, in making copies of Bidding Documents available on the above terms, do so only for the purpose of obtaining Bids for the Work and do not authorize or confer a license for any other use.

ARTICLE 3 – QUALIFICATIONS OF BIDDERS

3.01 To demonstrate Bidder's qualifications to perform the Work, after submitting its Bid and within 2 days of Owner's request, Bidder shall submit (a) written evidence establishing its qualifications such as financial data, previous experience, and present commitments, and (b) the following additional information:

A. Evidence of Bidder's authority to do business in the state where the Project is located.

3.02 A Bidder's failure to submit required qualification information within the times indicated may disqualify Bidder from receiving an award of the Contract.

3.03 No requirement in this Article 3 to submit information will prejudice the right of Owner to seek additional pertinent information regarding Bidder's qualifications.

3.04 Bidder is advised to carefully review those portions of the Bid Form requiring Bidder's representations and certifications.

ARTICLE 4 – SITE AND OTHER AREAS; EXISTING SITE CONDITIONS; EXAMINATION OF SITE; OWNER'S SAFETY PROGRAM; OTHER WORK AT THE SITE

4.01 *Site and Other Areas*

A. The Site is identified in the Bidding Documents. By definition, the Site includes rights-of-way, easements, and other lands furnished by Owner for the use of the Contractor. Any additional lands required for temporary construction facilities, construction equipment, or storage of materials and equipment, and any access needed for such additional lands, are to be obtained and paid for by Contractor.

4.02 *Existing Site Conditions*

A. Subsurface and Physical Conditions; Hazardous Environmental Conditions

1. Subsurface and Physical Conditions; Hazardous Environmental Conditions: None Available.

2. Geotechnical Baseline Report: No Geotechnical Baseline Report is Available.

B. Underground Facilities: Information and data shown or indicated in the Bidding Documents with respect to existing Underground Facilities at or adjacent to the Site are set forth in the Contract Documents and

Copyright © 2013 National Society of Professional Engineers, American Council of Engineering Companies, and American Society of Civil Engineers. All rights reserved.

are based upon information and data furnished to Owner and Engineer by owners of such Underground Facilities, including Owner, or others.

C. Adequacy of Data: Provisions concerning responsibilities for the adequacy of data furnished to prospective Bidders with respect to subsurface conditions, other physical conditions, and Underground Facilities, and possible changes in the Bidding Documents due to differing or unanticipated subsurface or physical conditions appear in Paragraphs 5.03, 5.04, and 5.05 of the General Conditions. Provisions concerning responsibilities for the adequacy of data furnished to prospective Bidders with respect to a Hazardous Environmental Condition at the Site, if any, and possible changes in the Contract Documents due to any Hazardous Environmental Condition uncovered or revealed at the Site which was not shown or indicated in the Drawings or Specifications or identified in the Contract Documents to be within the scope of the Work, appear in Paragraph 5.06 of the General Conditions.

4.03 *Site Visit and Testing by Bidders*

A. Bidder shall conduct the required Site visit during normal working hours, and shall not disturb any ongoing operations at the Site.

B. Bidder is not required to conduct any subsurface testing, or exhaustive investigations of Site conditions.

C. On request, and to the extent Owner has control over the Site, and schedule permitting, the Owner will provide Bidder access to the Site to conduct such additional examinations, investigations, explorations, tests, and studies as Bidder deems necessary for preparing and submitting a successful Bid. Owner will not have any obligation to grant such access if doing so is not practical because of existing operations, security or safety concerns, or restraints on Owner's authority regarding the Site.

D. Bidder shall comply with all applicable Laws and Regulations regarding excavation and location of utilities, obtain all permits, and comply with all terms and conditions established by Owner or by property owners or other entities controlling the Site with respect to schedule, access, existing operations, security, liability insurance, and applicable safety programs.

E. Bidder shall fill all holes and clean up and restore the Site to its former condition upon completion of such explorations, investigations, tests, and studies.

4.04 *Owner's Safety Program*

A. Site visits and work at the Site may be governed by an Owner safety program. As the General Conditions indicate, if an Owner safety program exists, it will be noted in the Supplementary Conditions.

4.05 *Other Work at the Site*

A. Reference is made to Article 8 of the Supplementary Conditions for the identification of the general nature of other work of which Owner is aware (if any) that is to be performed at the Site by Owner or others (such as utilities and other prime contractors) and relates to the Work contemplated by these Bidding Documents. If Owner is party to a written contract for such other work, then on request, Owner will provide to each Bidder access to examine such contracts (other than portions thereof related to price and other confidential matters), if any.

ARTICLE 5 – BIDDER'S REPRESENTATIONS

5.01 It is the responsibility of each Bidder before submitting a Bid to:

A. examine and carefully study the Bidding Documents, and any data and reference items identified in the Bidding Documents;

Copyright © 2013 National Society of Professional Engineers, American Council of Engineering Companies, and American Society of Civil Engineers. All rights reserved.

B. visit the Site, conduct a thorough, alert visual examination of the Site and adjacent areas, and become familiar with and satisfy itself as to the general, local, and Site conditions that may affect cost, progress, and performance of the Work;

C. become familiar with and satisfy itself as to all Laws and Regulations that may affect cost, progress, and performance of the Work including but not limited to American Iron and Steel requirements as mandated by Section 746 of Title VII of the Consolidated Appropriations Act of 2017 (Division A - Agriculture, Rural Development, Food and Drug Administration, and Related Agencies Appropriations Act, 2017) and subsequent statutes mandating domestic preference which apply to the following products made primarily of iron or steel: lined or unlined pipes and fittings, manhole covers and other municipal castings, hydrants, tanks, flanges, pipe clamps and restraints, valves, structural steel, reinforced precast concrete, and construction materials.

D. carefully study all: (1) reports of explorations and tests of subsurface conditions at or adjacent to the Site and all drawings of physical conditions relating to existing surface or subsurface structures at the Site that have been identified in the Supplementary Conditions, especially with respect to Technical Data in such reports and drawings, and (2) reports and drawings relating to Hazardous Environmental Conditions, if any, at or adjacent to the Site that have been identified in the Supplementary Conditions, especially with respect to Technical Data in such reports and drawings;

E. consider the information known to Bidder itself; information commonly known to contractors doing business in the locality of the Site; information and observations obtained from visits to the Site; the Bidding Documents; and the Site-related reports and drawings identified in the Bidding Documents, with respect to the effect of such information, observations, and documents on (1) the cost, progress, and performance of the Work; (2) the means, methods, techniques, sequences, and procedures of construction to be employed by Bidder; and (3) Bidder's safety precautions and programs;

F. agree, based on the information and observations referred to in the preceding paragraph, that at the time of submitting its Bid no further examinations, investigations, explorations, tests, studies, or data are necessary for the determination of its Bid for performance of the Work at the price bid and within the times required, and in accordance with the other terms and conditions of the Bidding Documents;

G. become aware of the general nature of the work to be performed by Owner and others at the Site that relates to the Work as indicated in the Bidding Documents;

H. promptly give Engineer written notice of all conflicts, errors, ambiguities, or discrepancies that Bidder discovers in the Bidding Documents and confirm that the written resolution thereof by Engineer is acceptable to Bidder;

I. determine that the Bidding Documents are generally sufficient to indicate and convey understanding of all terms and conditions for the performance and furnishing of the Work; and

J. agree that the submission of a Bid will constitute an incontrovertible representation by Bidder that Bidder has complied with every requirement of this Article, that without exception the Bid and all prices in the Bid are premised upon performing and furnishing the Work required by the Bidding Documents.

ARTICLE 6 – PRE-BID CONFERENCE

6.01 A pre-Bid conference will be held at the time and location stated in the invitation or advertisement to bid. Representatives of Owner and Engineer will be present to discuss the Project. Bidders are encouraged to attend and participate in the conference. Engineer will transmit to all prospective Bidders of record such Addenda as Engineer considers necessary in response to questions arising at the conference. Oral statements may not be relied upon and will not be binding or legally effective.

Copyright © 2013 National Society of Professional Engineers, American Council of Engineering Companies, and American Society of Civil Engineers. All rights reserved.

ARTICLE 7 – INTERPRETATIONS AND ADDENDA

7.01 All questions about the meaning or intent of the Bidding Documents are to be submitted to Engineer in writing. Interpretations or clarifications considered necessary by Engineer in response to such questions will be issued by Addenda delivered to all parties recorded as having received the Bidding Documents. Questions received less than seven days prior to the date for opening of Bids may not be answered. Only questions answered by Addenda will be binding. Oral and other interpretations or clarifications will be without legal effect.

7.02 Addenda may be issued to clarify, correct, supplement, or change the Bidding Documents.

ARTICLE 8 – BID SECURITY

8.01 A Bid must be accompanied by Bid security made payable to Owner in an amount of 5 percent of Bidder's maximum Bid price (determined by adding the base bid and all alternates) and in the form of a certified check, bank money order, or a Bid bond (on the form included in the Bidding Documents) issued by a surety meeting the requirements of Paragraphs 6.01 and 6.02 of the General Conditions.

8.02 The Bid security of the apparent Successful Bidder will be retained until Owner awards the contract to such Bidder, and such Bidder has executed the Contract Documents, furnished the required contract security, and met the other conditions of the Notice of Award, whereupon the Bid security will be released. If the Successful Bidder fails to execute and deliver the Contract Documents and furnish the required contract security within 15 days after the Notice of Award, Owner may consider Bidder to be in default, annul the Notice of Award, and the Bid security of that Bidder will be forfeited. Such forfeiture shall be Owner's exclusive remedy if Bidder defaults.

8.03 The Bid security of other Bidders that Owner believes to have a reasonable chance of receiving the award may be retained by Owner until the earlier of seven days after the Effective Date of the Contract or 91 days after the Bid opening, whereupon Bid security furnished by such Bidders will be released.

8.04 Bid security of other Bidders that Owner believes do not have a reasonable chance of receiving the award will be released within seven days after the Bid opening.

ARTICLE 9 – CONTRACT TIMES

9.01 The number of days within which, or the dates by which, Milestones are to be achieved and the Work is to be substantially completed, and completed and ready for final payment, are set forth in the Agreement.

ARTICLE 10 – LIQUIDATED DAMAGES

10.01 Provisions for liquidated damages, if any, for failure to timely attain a Milestone, Substantial Completion, or completion of the Work in readiness for final payment, are set forth in the Agreement.

ARTICLE 11 – SUBSTITUTE AND "OR-EQUAL" ITEMS

11.01 The Contract for the Work, if awarded, will be on the basis of materials and equipment specified or described in the Bidding Documents, and those "or-equal" or substitute materials and equipment subsequently approved by Engineer prior to the submittal of Bids and identified by Addendum. No item of material or equipment will be considered by Engineer as an "or- equal" or substitute unless written request for approval has been submitted by Bidder and has been received by Engineer at least 15 days prior to the date for receipt of Bids in the case of a proposed substitute and 5 days prior in the case of a proposed "or-equal." Each such request shall comply with the requirements of Paragraphs 7.04 and 7.05 of the General Conditions. Each such request shall include Manufacturer's Certification letter for compliance with Section 746 of Title VII of the Consolidated Appropriations Act of 2017 (Division A - Agriculture, Rural Development, Food and Drug

Copyright © 2013 National Society of Professional Engineers, American Council of Engineering Companies, and American Society of Civil Engineers. All rights reserved.

Administration, and Related Agencies Appropriations Act, 2017) and subsequent statutes mandating domestic preference, if applicable. Refer to Manufacturer's Certification Letter provided in these Contract Documents. The burden of proof of the merit of the proposed item is upon Bidder. Engineer's decision of approval or disapproval of a proposed item will be final. If Engineer approves any such proposed item, such approval will be set forth in an Addendum issued to all prospective Bidders. Bidders shall not rely upon approvals made in any other manner. Substitutes and "or-equal" materials and equipment may be proposed by Contractor in accordance with Paragraphs 7.04 and 7.05 of the General Conditions after the Effective Date of the Contract.

11.02 All prices that Bidder sets forth in its Bid shall be based on the presumption that the Contractor will furnish the materials and equipment specified or described in the Bidding Documents, as supplemented by Addenda. Any assumptions regarding the possibility of post-Bid approvals of "or-equal" or substitution requests are made at Bidder's sole risk.

11.03 If an award is made, Contractor shall be allowed to submit proposed substitutes and "or-equals" in accordance with the General Conditions.

ARTICLE 12 – SUBCONTRACTORS, SUPPLIERS, AND OTHERS

12.01 If required by the bid documents. The apparent Successful Bidder, and any other Bidder so requested, shall within five days after Bid opening, submit to Owner a list of the Subcontractors or Suppliers proposed for the following portions of the Work: *N/A.*

If requested by Owner, such list shall be accompanied by an experience statement with pertinent information regarding similar projects and other evidence of qualification for each such Subcontractor, Supplier, or other individual or entity. If Owner or Engineer, after due investigation, has reasonable objection to any proposed Subcontractor, Supplier, individual, or entity, Owner may, before the Notice of Award is given, request apparent Successful Bidder to submit an acceptable substitute, in which case apparent Successful Bidder shall submit a substitute, Bidder's Bid price will be increased (or decreased) by the difference in cost occasioned by such substitution, and Owner may consider such price adjustment in evaluating Bids and making the Contract award.

12.02 If apparent Successful Bidder declines to make any such substitution, Owner may award the Contract to the next lowest Bidder that proposes to use acceptable Subcontractors, Suppliers, or other individuals or entities. Declining to make requested substitutions will constitute grounds for forfeiture of the Bid security of any Bidder. Any Subcontractor, Supplier, individual, or entity so listed and against which Owner or Engineer makes no written objection prior to the giving of the Notice of Award will be deemed acceptable to Owner and Engineer subject to subsequent revocation of such acceptance as provided in Paragraph 7.06 of the General Conditions.

12.05 Contractor shall not be required to employ any Subcontractor, Suppliers, individuals, or entity against whom Contractor has reasonable objection.

12.06 The Contractor shall not award work to Subcontractor(s) in excess of the limits stated in SC 7.06.

ARTICLE 13 – PREPARATION OF BID

13.01 The Bid Form is included with the Bidding Documents.

A. All blanks on the Bid Form shall be completed in ink and the Bid Form signed in ink. Erasures or alterations shall be initialed in ink by the person signing the Bid Form. A Bid price shall be indicated for each section, Bid item, alternate, adjustment unit price item, and unit price item listed therein.

Copyright © 2013 National Society of Professional Engineers, American Council of Engineering Companies, and American Society of Civil Engineers. All rights reserved.

B. If the Bid Form expressly indicates that submitting pricing on a specific alternate item is optional, and Bidder elects to not furnish pricing for such optional alternate item, then Bidder may enter the words "No Bid" or "Not Applicable."

13.02 A Bid by a corporation shall be executed in the corporate name by a corporate officer (whose title must appear under the signature), accompanied by evidence of authority to sign. The corporate address and state of incorporation shall be shown.

13.03 A Bid by a partnership shall be executed in the partnership name and signed by a partner (whose title must appear under the signature), accompanied by evidence of authority to sign. The partnership's address for receiving notices shall be shown.

13.04 A Bid by a limited liability company shall be executed in the name of the firm by a member or other authorized person and accompanied by evidence of authority to sign. The state of formation of the firm and the firm's address for receiving notices shall be shown.

13.05 A Bid by an individual shall show the Bidder's name and address for receiving notices.

13.06 A Bid by a joint venture shall be executed by an authorized representative of each joint venturer in the manner indicated on the Bid Form. The joint venture's address for receiving notices shall be shown.

13.07 All names shall be printed in ink below the signatures.

13.08 The Bid shall contain an acknowledgment of receipt of all Addenda, the numbers of which shall be filled in on the Bid Form.

13.09 Postal and e-mail addresses and telephone number for communications regarding the Bid shall be shown.

13.10 The Bid shall contain evidence of Bidder's authority and qualification to do business in the state where the Project is located, or Bidder shall covenant in writing to obtain such authority and qualification prior to award of the Contract and attach such covenant to the Bid. Bidder's state contractor license number, if any, shall also be shown on the Bid Form.

ARTICLE 14 – BASIS OF BID

14.01 Base Bid with Alternates

A. Bidders shall submit a Bid on a unit price basis for the base Bid and include a separate price for each alternate described in the Bidding Documents and as provided for in the Bid Form. The price for each alternate will be the amount added to or deleted from the base Bid if Owner selects the alternate.

B. In the comparison of Bids, alternates will be applied in the same order of priority as listed in the Bid Form.

14.02 *Unit Price*

A. Bidders shall submit a Bid on a unit price basis for each item of Work listed in the unit price section of the Bid Form.

B. The "Bid Price" (sometimes referred to as the extended price) for each unit price Bid item will be the product of the "Estimated Quantity" (which Owner or its representative has set forth in the Bid Form) for the item and the corresponding "Bid Unit Price" offered by the Bidder. The total of all unit price Bid items will be the sum of these "Bid Prices"; such total will be used by Owner for Bid comparison purposes. The final quantities and Contract Price will be determined in accordance with Paragraph 13.03 of the General Conditions.

Copyright © 2013 National Society of Professional Engineers, American Council of Engineering Companies, and American Society of Civil Engineers. All rights reserved.

C. Discrepancies between the multiplication of units of Work and unit prices will be resolved in favor of the unit prices. Discrepancies between the indicated sum of any column of figures and the correct sum thereof will be resolved in favor of the correct sum.

14.03 *Allowances*

A. For cash allowances the Bid price shall include such amounts as the Bidder deems proper for Contractor's overhead, costs, profit, and other expenses on account of cash allowances, if any, named in the Contract Documents, in accordance with Paragraph 13.02.B of the General Conditions.

ARTICLE 15 – SUBMITTAL OF BID

15.01 With each copy of the Bidding Documents, a Bidder is furnished one separate unbound copy of the Bid Form, and, if required, the Bid Bond Form. The unbound copy of the Bid Form is to be completed and submitted with the Bid security and the other documents required to be submitted under the terms of Article 7 of the Bid Form.

15.02 A Bid shall be received no later than the date and time prescribed and at the place indicated in the advertisement or invitation to bid and shall be enclosed in a plainly marked package with the Project title (and, if applicable, the designated portion of the Project for which the Bid is submitted), the name and address of Bidder, and shall be accompanied by the Bid security and other required documents. If a Bid is sent by mail or other delivery system, the sealed envelope containing the Bid shall be enclosed in a separate package plainly marked on the outside with the notation "BID ENCLOSED." A mailed Bid shall be addressed to Greg Bates.

15.03 Bids received after the date and time prescribed for the opening of bids, or not submitted at the correct location or in the designated manner, will not be accepted and will be returned to the Bidder unopened.

ARTICLE 16 – MODIFICATION AND WITHDRAWAL OF BID

16.01 A Bid may be withdrawn by an appropriate document duly executed in the same manner that a Bid must be executed and delivered to the place where Bids are to be submitted prior to the date and time for the opening of Bids. Upon receipt of such notice, the unopened Bid will be returned to the Bidder.

16.02 If a Bidder wishes to modify its Bid prior to Bid opening, Bidder must withdraw its initial Bid in the manner specified in Paragraph 16.01 and submit a new Bid prior to the date and time for the opening of Bids.

16.03 If within 24 hours after Bids are opened any Bidder files a duly signed written notice with Owner and promptly thereafter demonstrates to the reasonable satisfaction of Owner that there was a material and substantial mistake in the preparation of its Bid, that Bidder may withdraw its Bid, and the Bid security will be returned. Thereafter, if the Work is rebid, that Bidder will be disqualified from further bidding on the Work.

ARTICLE 17 – OPENING OF BIDS

17.01 Bids will be opened at the time and place indicated in the advertisement or invitation to bid and, unless obviously non-responsive, read aloud publicly. An abstract of the amounts of the base Bids and major alternates, if any, will be made available to Bidders after the opening of Bids.

ARTICLE 18 – BIDS TO REMAIN SUBJECT TO ACCEPTANCE

18.01 All Bids will remain subject to acceptance for the period of time stated in the Bid Form, but Owner may, in its sole discretion, release any Bid and return the Bid security prior to the end of this period.

Copyright © 2013 National Society of Professional Engineers, American Council of Engineering Companies, and American Society of Civil Engineers. All rights reserved.

ARTICLE 19 – EVALUATION OF BIDS AND AWARD OF CONTRACT

19.01 Owner reserves the right to reject any or all Bids, including without limitation, nonconforming, nonresponsive, unbalanced, or conditional Bids. Owner will reject the Bid of any Bidder that Owner finds, after reasonable inquiry and evaluation, to not be responsible. If Bidder purports to add terms or conditions to its Bid, takes exception to any provision of the Bidding Documents, or attempts to alter the contents of the Contract Documents for purposes of the Bid, then the Owner will reject the Bid as nonresponsive; provided that Owner also reserves the right to waive all minor informalities not involving price, time, or changes in the Work.

19.02 If Owner awards the contract for the Work, such award shall be to the responsible Bidder submitting the lowest responsive Bid.

19.03 Evaluation of Bids

A. In evaluating Bids, Owner will consider whether or not the Bids comply with the prescribed requirements, and such alternates, unit prices, and other data, as may be requested in the Bid Form or prior to the Notice of Award.

B. In the comparison of Bids, alternates will be applied in the same order of priority as listed in the Bid Form. To determine the Bid prices for purposes of comparison, Owner shall announce to all bidders a "Base Bid plus alternates" budget after receiving all Bids, but prior to opening them. For comparison purposes alternates will be accepted, following the order of priority established in the Bid Form, until doing so would cause the budget to be exceeded. After determination of the Successful Bidder based on this comparative process and on the responsiveness, responsibility, and other factors set forth in these Instructions, the award may be made to said Successful Bidder on its base Bid and any combination of its additive alternate Bids for which Owner determines funds will be available at the time of award.

~~A. Bid prices will be compared after adjusting for differences in time of Substantial Completion (total number of calendar days to substantially complete the Work) designated by Bidders. The adjusting amount will be determined at the rate set forth in the Agreement for liquidated damages for failing to achieve Substantial Completion, or such other amount that Owner has designated in the Bid Form.~~

~~1. The method for calculating the lowest bid for comparison will be the summation of the Bid price shown in the Bid Form plus the product of the Bidder-specified time of Substantial Completion (in calendar days) times the rate for liquidated damages **[or other Owner-designated daily rate]** (in dollars per day).~~

~~2. This procedure is only used to determine the lowest bid for comparison and contractor selection purposes. The Contract Price for compensation and payment purposes remains the Bid price shown in the Bid Form.~~

19.04 In evaluating whether a Bidder is responsible, Owner will consider the qualifications of the Bidder and may consider the qualifications and experience of Subcontractors and Suppliers proposed for those portions of the Work for which the identity of Subcontractors and Suppliers must be submitted as provided in the Bidding Documents.

19.05 Owner may conduct such investigations as Owner deems necessary to establish the responsibility, qualifications, and financial ability of Bidders and any proposed Subcontractors or Suppliers.

ARTICLE 20 – BONDS AND INSURANCE

20.01 Article 6 of the General Conditions, as may be modified by the Supplementary Conditions, sets forth Owner's requirements as to performance and payment bonds and insurance. When the Successful Bidder delivers the

Copyright © 2013 National Society of Professional Engineers, American Council of Engineering Companies, and American Society of Civil Engineers. All rights reserved.

Agreement (executed by Successful Bidder) to Owner, it shall be accompanied by required bonds and insurance documentation.

ARTICLE 21 – SIGNING OF AGREEMENT

21.01 When Owner issues a Notice of Award to the Successful Bidder, it shall be accompanied by the unexecuted counterparts of the Agreement along with the other Contract Documents as identified in the Agreement. Within 15 days thereafter, Successful Bidder shall execute and deliver the required number of counterparts of the Agreement (and any bonds and insurance documentation required to be delivered by the Contract Documents) to Owner. Within ten days thereafter, Owner shall deliver one fully executed counterpart of the Agreement to Successful Bidder, together with printed and electronic copies of the Contract Documents as stated in Paragraph 2.02 of the General Conditions.

ARTICLE 22 – SALES AND USE TAXES

22.01 Owner is exempt from Illinois state sales and use taxes on materials and equipment to be incorporated in the Work. Said taxes shall not be included in the Bid. Refer to Paragraph SC-7.09 of the Supplementary Conditions for additional information.

ARTICLE 23 – CONTRACTS TO BE ASSIGNED

23.01 Not Applicable.

ARTICLE 24 – FEDERAL REQUIREMENTS

24.01 ~~If the contract price is in excess of $100,000, provisions of the Contract Work Hours and Safety Standards Act at 29 CFR 5.5(b) apply.~~ Federal requirements at Article 19 of the Supplementary Conditions apply to this Contract.

Section 746 of Title VII of the Consolidated Appropriations Act of 2017 (Division A - Agriculture, Rural Development, Food and Drug Administration, and Related Agencies Appropriations Act, 2017) and subsequent statutes mandating domestic preference applies an American Iron and Steel requirement to this project. All iron and steel products used in this project must be produced in the United States. The term "iron and steel products" means the following products made primarily of iron or steel: lined or unlined pipes and fittings, manhole covers and other municipal castings, hydrants, tanks, flanges, pipe clamps and restraints, valves, structural steel, reinforced precast concrete, and construction materials. The deminimis and minor components waiver *NONE* apply to this contract.

Copyright © 2013 National Society of Professional Engineers, American Council of Engineering Companies, and American Society of Civil Engineers. All rights reserved.

Intentionally Blank

BID FORM

Jersey County Rural Water Company

Phase V System Improvements Ground Storage Tank

Contract K

00139-4100

TABLE OF CONTENTS

Page

ARTICLE 1 – Bid Recipient 1

ARTICLE 2 – Bidder's Acknowledgements 1

ARTICLE 3 – Bidder's Representations 1

ARTICLE 4 – Bidder's Certification 2

ARTICLE 5 – Basis of Bid 2

ARTICLE 6 – Time of Completion 5

ARTICLE 7 – Attachments to this Bid 5

ARTICLE 8 – Defined Terms 5

ARTICLE 9 – Bid Submittal 6

Copyright © 2013 National Society of Professional Engineers, American Council of Engineering Companies, and American Society of Civil Engineers. All rights reserved.

Intentionally Blank

ARTICLE 1 – BID RECIPIENT

1.01 This Bid is submitted to:

Greg Bates, Operator

Jersey County Rural Water Company

1009 State Highway 16, Jerseyville, IL 62052

1.02 The undersigned Bidder proposes and agrees, if this Bid is accepted, to enter into an Agreement with Owner in the form included in the Bidding Documents to perform all Work as specified or indicated in the Bidding Documents for the prices and within the times indicated in this Bid and in accordance with the other terms and conditions of the Bidding Documents.

ARTICLE 2 – BIDDER'S ACKNOWLEDGEMENTS

2.01 Bidder accepts all of the terms and conditions of the Instructions to Bidders, including without limitation those dealing with the disposition of Bid security. This Bid will remain subject to acceptance for 90 days after the Bid opening, or for such longer period of time that Bidder may agree to in writing upon request of Owner.

ARTICLE 3 – BIDDER'S REPRESENTATIONS

3.01 In submitting this Bid, Bidder represents that:

A. Bidder has examined and carefully studied the Bidding Documents, and any data and reference items identified in the Bidding Documents, and hereby acknowledges receipt of the following Addenda:

Addendum No.	Addendum, Date

B. Bidder has visited the Site, conducted a thorough, alert visual examination of the Site and adjacent areas, and become familiar with and satisfied itself as to the general, local, and Site conditions that may affect cost, progress, and performance of the Work.

C. Bidder is familiar with and has satisfied itself as to all Laws and Regulations that may affect cost, progress, and performance of the Work and including all American Iron and Steel requirements.

D. Bidder has carefully studied all: (1) reports of explorations and tests of subsurface conditions at or adjacent to the Site and all drawings of physical conditions relating to existing surface or subsurface structures at the Site that have been identified in the Supplementary Conditions, especially with respect to Technical Data in such reports and drawings, and (2) reports and drawings relating to Hazardous Environmental Conditions, if any, at or adjacent to the Site that have been identified in the Supplementary Conditions, especially with respect to Technical Data in such reports and drawings.

E. Bidder has considered the information known to Bidder itself; information commonly known to contractors doing business in the locality of the Site; information and observations obtained from visits to the Site; the Bidding Documents; and any Site-related reports and drawings identified in the Bidding Documents, with respect to the effect of such information, observations, and documents on (1) the cost,

Copyright © 2013 National Society of Professional Engineers, American Council of Engineering Companies, and American Society of Civil Engineers. All rights reserved.

progress, and performance of the Work; (2) the means, methods, techniques, sequences, and procedures of construction to be employed by Bidder; and (3) Bidder's safety precautions and programs.

F. Bidder agrees, based on the information and observations referred to in the preceding paragraph, that no further examinations, investigations, explorations, tests, studies, or data are necessary for the determination of this Bid for performance of the Work at the price bid and within the times required, and in accordance with the other terms and conditions of the Bidding Documents.

G. Bidder is aware of the general nature of work to be performed by Owner and others at the Site that relates to the Work as indicated in the Bidding Documents.

H. Bidder has given Engineer written notice of all conflicts, errors, ambiguities, or discrepancies that Bidder has discovered in the Bidding Documents, and confirms that the written resolution thereof by Engineer is acceptable to Bidder.

I. The Bidding Documents are generally sufficient to indicate and convey understanding of all terms and conditions for the performance and furnishing of the Work.

J. The submission of this Bid constitutes an incontrovertible representation by Bidder that Bidder has complied with every requirement of this Article, and that without exception the Bid and all prices in the Bid are premised upon performing and furnishing the Work required by the Bidding Documents.

ARTICLE 4 – BIDDER'S CERTIFICATION

4.01 Bidder certifies that:

A. This Bid is genuine and not made in the interest of or on behalf of any undisclosed individual or entity and is not submitted in conformity with any collusive agreement or rules of any group, association, organization, or corporation;

B. Bidder has not directly or indirectly induced or solicited any other Bidder to submit a false or sham Bid;

C. Bidder has not solicited or induced any individual or entity to refrain from bidding; and

D. Bidder has not engaged in corrupt, fraudulent, collusive, or coercive practices in competing for the Contract. For the purposes of this Paragraph 4.01.D:

1. "corrupt practice" means the offering, giving, receiving, or soliciting of any thing of value likely to influence the action of a public official in the bidding process;

2. "fraudulent practice" means an intentional misrepresentation of facts made (a) to influence the bidding process to the detriment of Owner, (b) to establish bid prices at artificial non-competitive levels, or (c) to deprive Owner of the benefits of free and open competition;

3. "collusive practice" means a scheme or arrangement between two or more Bidders, with or without the knowledge of Owner, a purpose of which is to establish bid prices at artificial, non-competitive levels; and

4. "coercive practice" means harming or threatening to harm, directly or indirectly, persons or their property to influence their participation in the bidding process or affect the e execution of the Contract.

ARTICLE 5 – BASIS OF BID

5.01 Bidder will complete the Work in accordance with the Contract Documents for the following price(s):

Copyright © 2013 National Society of Professional Engineers, American Council of Engineering Companies, and American Society of Civil Engineers. All rights reserved.

Base Bid A:

PROJECT: Phase V System Improvements Ground Storage Tank - Contract K					
H&A FILE NO.: 00139-4100					
	ITEMS - BASE BID "A"	QUANTITY	UNIT	UNIT PRICE	TOTAL PRICE
1	200,000 Gal Ground Storage Tank *	1	L.S.	$	$
2	Blasting and Protective Coatings	1	L.S.	$	$
3	Start-Up and Miscellaneous	1	L.S.	$	$
4	Yard Piping (Ductile Iron Pipe, Gate Valves,	1	L.S.	$	$
5	Tank Foundation	1	L.S.	$	$
6	Concrete Floor and Starter Ring	1	L.S.	$	$
TOTAL BID AMOUNT				**$**	

Dollars

(In Words)

Alternate Bid A-1:

Should Alternate A-1 be selected by the OWNER, the Alternate Bid item shown below will replace Bid Item 1 in the Base Bid A Bid Schedule.

	ITEMS - BASE BID "A" Alt. A-1	QUANTITY	UNIT	UNIT PRICE	TOTAL PRICE
A-1	200,000 Gal Ground Storage Tank **	1	L.S.	$	$

* Milestone One on or before May 31, 2022
Substantial Completion on or before August 31, 2022

** Milestone One on or before August 31, 2022
Substantial Completion on or before November 31, 2022

Copyright © 2013 National Society of Professional Engineers, American Council of Engineering Companies, and American Society of Civil Engineers. All rights reserved.

Base Bid B:

	ITEMS - BASE BID "B"	QUANTITY	UNIT	UNIT PRICE	TOTAL PRICE
1	Storage Tank (June 30, 2022)	1	L.S.	$	$
2	Blasting and Protective Coatings	1	L.S.	$	$
3	Start-Up and Miscellaneous	1	L.S.	$	$
4	Yard Piping (Ductile Iron Pipe, Gate Valves, Connections)	1	L.S.	$	$
5	Tank Foundation	1	L.S.	$	$
6	Bolted Steel Floor	1	L.S.	$	$
TOTAL BID AMOUNT				**$**	

Dollars

(In Words)

Alternate Bid B-1:

Should Alternate B-1 be selected by the OWNER, the Alternate Bid item shown below will replace Bid Item 1 in the Base Bid B Bid Schedule.

	ITEMS - BASE BID "B" Alt. B-1	QUANTITY	UNIT	UNIT PRICE	TOTAL PRICE
B-1	200,000 Gal Ground Storage Tank (November 30, 2022)	1	L.S.	$	$

* Milestone One on or before May 31, 2022
Substantial Completion on or before August 31, 2022

** Milestone One on or before August 31, 2022
Substantial Completion on or before November 31, 2022

Copyright © 2013 National Society of Professional Engineers, American Council of Engineering Companies, and American Society of Civil Engineers. All rights reserved.

ARTICLE 6 – TIME OF COMPLETION

6.01 Bidder agrees that the Work will be substantially complete and will be completed and ready for final payment in accordance with Paragraph 15.06 of the General Conditions on or before the dates or within the number of calendar days indicated in the Agreement.

6.02 Bidder accepts the provisions of the Agreement as to liquidated damages.

ARTICLE 7 – ATTACHMENTS TO THIS BID

7.01 The following documents are submitted with and made a condition of this Bid:

A. Required Bid security;

B. List of Proposed Subcontractors;

C. List of Proposed Suppliers;

D. List of Project References;

E. Evidence of authority to do business in the state of the Project; or a written covenant to obtain such license within the time for acceptance of Bids;

F. Contractor's License No.: _____ **[or]** Evidence of Bidder's ability to obtain a State Contractor's License and a covenant by Bidder to obtain said license within the time for acceptance of Bids;

G. Required Bidder Qualification Statement with supporting data; and

H. If bid amount exceeds $10,000, signed Compliance Statement (RD400-6). Refer to specific equal opportunity requirements set forth in the Supplemental General Conditions;

I. If Bid amount exceeds $25,000, signed Certification Regarding Debarment, Suspension, Ineligibility and Voluntary Exclusion – Lower Tier Covered Transactions (AD-1048);

J. If Bid amount exceeds $100,000, signed RD Instructions 1940-Q, Exhibit A-1, Certification for Contracts, Grants, and Loans.

~~J.~~K. K. Manufacturers' Certification letter of compliance with Section 746 of Title VII of the Consolidated Appropriations Act of 2017 (Division A - Agriculture, Rural Development, Food and Drug Administration, and Related Agencies Appropriations Act, 2017) and subsequent statutes mandating domestic preference for all equals or substitutes approved by Addenda for American Iron and Steel products as provided in these Contract Documents.

ARTICLE 8 – DEFINED TERMS

8.01 The terms used in this Bid with initial capital letters have the meanings stated in the Instructions to Bidders, the General Conditions, and the Supplementary Conditions.

Copyright © 2013 National Society of Professional Engineers, American Council of Engineering Companies, and American Society of Civil Engineers. All rights reserved.

ARTICLE 9 – BID SUBMITTAL

BIDDER: *[Indicate correct name of bidding entity]*

_____

By:
[Signature] _____

[Printed name] _____
(If Bidder is a corporation, a limited liability company, a partnership, or a joint venture, attach evidence of authority to sign.)

Attest:
[Signature] _____

[Printed name] _____

Title: _____

Submittal Date: _____

Address for giving notices:

_____

_____

_____

Telephone Number: _____

Fax Number: _____

Contact Name and e-mail address: _____

_____

Bidder's License No.: _____
(where applicable)

Copyright © 2013 National Society of Professional Engineers, American Council of Engineering Companies, and American Society of Civil Engineers. All rights reserved.

BID BOND

Any singular reference to Bidder, Surety, Owner or other party shall be considered plural where applicable.

BIDDER *(Name and Address)*:

SURETY *(Name, and Address of Principal Place of Business)*:

OWNER *(Name and Address)*:
Jersey County Rural Water Company
1009 State Highway 16
Jerseyville, IL, 62052

BID
Bid Due Date:
Description *(Project Name— Include Location)*: Phase V System Improvements Ground Storage Tank Contract K- This project consists of constructing a 200,000 gallon water storage tank, foundation, and related appurtenances.

BOND
Bond Number:
Date:
Penal sum _____ $ _____
(Words) (Figures)

Surety and Bidder, intending to be legally bound hereby, subject to the terms set forth below, do each cause this Bid Bond to be duly executed by an authorized officer, agent, or representative.

BIDDER	**SURETY**
_____ (Seal)	_____ (Seal)
Bidder's Name and Corporate Seal	Surety's Name and Corporate Seal
By: _____	By: _____
Signature	Signature (Attach Power of Attorney)
_____	_____
Print Name	Print Name
_____	_____
Title	Title
Attest: _____	Attest: _____
Signature	Signature
Title	Title

Note: Addresses are to be used for giving any required notice.
Provide execution by any additional parties, such as joint venturers, if necessary.

1. Bidder and Surety, jointly and severally, bind themselves, their heirs, executors, administrators, successors, and assigns to pay to Owner upon default of Bidder the penal sum set forth on the face of this Bond. Payment of the penal sum is the extent of Bidder's and Surety's liability. Recovery of such penal sum under the terms of this Bond shall be Owner's sole and exclusive remedy upon default of Bidder.

2. Default of Bidder shall occur upon the failure of Bidder to deliver within the time required by the Bidding Documents (or any extension thereof agreed to in writing by Owner) the executed Agreement required by the Bidding Documents and any performance and payment bonds required by the Bidding Documents.

3. This obligation shall be null and void if:

3.1 Owner accepts Bidder's Bid and Bidder delivers within the time required by the Bidding Documents (or any extension thereof agreed to in writing by Owner) the executed Agreement required by the Bidding Documents and any performance and payment bonds required by the Bidding Documents, or

3.2 All Bids are rejected by Owner, or

3.3 Owner fails to issue a Notice of Award to Bidder within the time specified in the Bidding Documents (or any extension thereof agreed to in writing by Bidder and, if applicable, consented to by Surety when required by Paragraph 5 hereof).

4. Payment under this Bond will be due and payable upon default of Bidder and within 30 calendar days after receipt by Bidder and Surety of written notice of default from Owner, which notice will be given with reasonable promptness, identifying this Bond and the Project and including a statement of the amount due.

5. Surety waives notice of any and all defenses based on or arising out of any time extension to issue Notice of Award agreed to in writing by Owner and Bidder, provided that the total time for issuing Notice of Award including extensions shall not in the aggregate exceed 120 days from the Bid due date without Surety's written consent.

6. No suit or action shall be commenced under this Bond prior to 30 calendar days after the notice of default required in Paragraph 4 above is received by Bidder and Surety and in no case later than one year after the Bid due date.

7. Any suit or action under this Bond shall be commenced only in a court of competent jurisdiction located in the state in which the Project is located.

8. Notices required hereunder shall be in writing and sent to Bidder and Surety at their respective addresses shown on the face of this Bond. Such notices may be sent by personal delivery, commercial courier, or by United States Registered or Certified Mail, return receipt requested, postage pre-paid, and shall be deemed to be effective upon receipt by the party concerned.

9. Surety shall cause to be attached to this Bond a current and effective Power of Attorney evidencing the authority of the officer, agent, or representative who executed this Bond on behalf of Surety to execute, seal, and deliver such Bond and bind the Surety thereby.

10. This Bond is intended to conform to all applicable statutory requirements. Any applicable requirement of any applicable statute that has been omitted from this Bond shall be deemed to be included herein as if set forth at length. If any provision of this Bond conflicts with any applicable statute, then the provision of said statute shall govern and the remainder of this Bond that is not in conflict therewith shall continue in full force and effect.

11. The term "Bid" as used herein includes a Bid, offer, or proposal as applicable.

QUALIFICATIONS STATEMENT

THE INFORMATION SUPPLIED IN THIS DOCUMENT IS CONFIDENTIAL TO THE EXTENT PERMITTED BY LAWS AND REGULATIONS

1. SUBMITTED BY:

Official Name of Firm: _____

Address: _____

_____

_____

2. SUBMITTED TO: _____

3. SUBMITTED FOR: _____

Owner: _____

Project Name: _____

_____

_____

_____

TYPE OF WORK: _____

_____

_____

4. CONTRACTOR'S CONTACT INFORMATION

Contact Person: _____

Title: _____

Phone: _____

Email: _____

Copyright © 2013 National Society of Professional Engineers, American Council of Engineering Companies, and American Society of Civil Engineers. All rights reserved.

5. AFFILIATED COMPANIES:

Name: _____

Address: _____

_____

_____

6. TYPE OF ORGANIZATION:

☐ SOLE PROPRIETORSHIP

Name of Owner: _____

Doing Business As: _____

Date of Organization: _____

☐ PARTNERSHIP

Date of Organization: _____

Type of Partnership: _____

Name of General Partner(s): _____

_____

_____

☐ CORPORATION

State of Organization: _____

Date of Organization: _____

Executive Officers:

- President: _____

- Vice President(s): _____

_____

_____

- Treasurer: _____

- Secretary: _____

Copyright © 2013 National Society of Professional Engineers, American Council of Engineering Companies, and American Society of Civil Engineers. All rights reserved.

☐ LIMITED LIABILITY COMPANY

State of Organization: _____

Date of Organization: _____

Members: _____

_____

_____

_____

☐ JOINT VENTURE

Sate of Organization: _____

Date of Organization: _____

Form of Organization: _____

Joint Venture Managing Partner

- Name: _____

- Address: _____

_____

_____

Joint Venture Managing Partner

- Name: _____

- Address: _____

_____

Joint Venture Managing Partner

- Name: _____

- Address: _____

_____

Copyright © 2013 National Society of Professional Engineers, American Council of Engineering Companies, and American Society of Civil Engineers. All rights reserved.

7. LICENSING

Jurisdiction: _____

Type of License: _____

License Number: _____

Jurisdiction: _____

Type of License: _____

License Number: _____

8. CERTIFICATIONS

CERTIFIED BY:

Disadvantage Business Enterprise: _____

Minority Business Enterprise: _____

Woman Owned Enterprise: _____

Small Business Enterprise: _____

Other (_____): _____

9. BONDING INFORMATION

Bonding Company: _____

Address: _____

_____

Bonding Agent: _____

Address: _____

_____

_____

Contact Name: _____

Phone: _____

Aggregate Bonding Capacity: _____

Available Bonding Capacity as of date of this submittal: _____

Copyright © 2013 National Society of Professional Engineers, American Council of Engineering Companies, and American Society of Civil Engineers. All rights reserved.

10. FINANCIAL INFORMATION

Financial Institution: _____

Address: _____

_____

Account Manager: _____

Phone: _____

INCLUDE AS AN ATTACHMENT AN AUDITED BALANCE SHEET FOR EACH OF THE LAST 3 YEARS

11. CONSTRUCTION EXPERIENCE:

Current Experience:

List on **Schedule A** all uncompleted projects currently under contract (If Joint Venture list each participant's projects separately).

Previous Experience:

List on **Schedule B** all projects completed within the last 5 Years (If Joint Venture list each participant's projects separately).

Has firm listed in Section 1 ever failed to complete a construction contract awarded to it?

☐ YES ☐ NO

If YES, attach as an Attachment details including Project Owner's contact information.

Has any Corporate Officer, Partner, Joint Venture participant or Proprietor ever failed to complete a construction contract awarded to them in their name or when acting as a principal of another entity?

☐ YES ☐ NO

If YES, attach as an Attachment details including Project Owner's contact information.

Are there any judgments, claims, disputes or litigation pending or outstanding involving the firm listed in Section 1 or any of its officers (or any of its partners if a partnership or any of the individual entities if a joint venture)?

☐ YES ☐ NO

If YES, attach as an Attachment details including Project Owner's contact information.

Copyright © 2013 National Society of Professional Engineers, American Council of Engineering Companies, and American Society of Civil Engineers. All rights reserved.

12. SAFETY PROGRAM:

Name of Contractor's Safety Officer:_____

Include the following as attachments:

Provide as an Attachment Contractor's (and Contractor's proposed Subcontractors and Suppliers furnishing or performing Work having a value in excess of 10 percent of the total amount of the Bid) OSHA No. 300- Log & Summary of Occupational Injuries & Illnesses for the past 5 years.

Provide as an Attachment Contractor's (and Contractor's proposed Subcontractors and Suppliers furnishing or performing Work having a value in excess of 10 percent of the total amount of the Bid) list of all OSHA Citations & Notifications of Penalty (monetary or other) received within the last 5 years (indicate disposition as applicable) - IF NONE SO STATE.

Provide as an Attachment Contractor's (and Contractor's proposed Subcontractors and Suppliers furnishing or performing Work having a value in excess of 10 percent of the total amount of the Bid) list of all safety citations or violations under any state all received within the last 5 years (indicate disposition as applicable) - IF NONE SO STATE.

Provide the following for the firm listed in Section V (and for each proposed Subcontractor furnishing or performing Work having a value in excess of 10 percent of the total amount of the Bid) the following (attach additional sheets as necessary):

Workers' compensation Experience Modification Rate (EMR) for the last 5 years:

YEAR	_____	EMR	_____
YEAR	_____	EMR	_____
YEAR	_____	EMR	_____
YEAR	_____	EMR	_____
YEAR	_____	EMR	_____

Total Recordable Frequency Rate (TRFR) for the last 5 years:

YEAR	_____	TRFR	_____
YEAR	_____	TRFR	_____
YEAR	_____	TRFR	_____
YEAR	_____	TRFR	_____
YEAR	_____	TRFR	_____

Copyright © 2013 National Society of Professional Engineers, American Council of Engineering Companies, and American Society of Civil Engineers. All rights reserved.

Total number of man-hours worked for the last 5 Years:

YEAR	_____	TOTAL NUMBER OF MAN-HOURS	_____
YEAR	_____	TOTAL NUMBER OF MAN-HOURS	_____
YEAR	_____	TOTAL NUMBER OF MAN-HOURS	_____
YEAR	_____	TOTAL NUMBER OF MAN-HOURS	_____
YEAR	_____	TOTAL NUMBER OF MAN-HOURS	_____

Provide Contractor's (and Contractor's proposed Subcontractors and Suppliers furnishing or performing Work having a value in excess of 10 percent of the total amount of the Bid) Days Away From Work, Days of Restricted Work Activity or Job Transfer (DART) incidence rate for the particular industry or type of Work to be performed by Contractor and each of Contractor's proposed Subcontractors and Suppliers) for the last 5 years:

YEAR	_____	DART	_____
YEAR	_____	DART	_____
YEAR	_____	DART	_____
YEAR	_____	DART	_____
YEAR	_____	DART	_____

13. EQUIPMENT:

MAJOR EQUIPMENT:

List on **Schedule C** all pieces of major equipment available for use on Owner's Project.

Copyright © 2013 National Society of Professional Engineers, American Council of Engineering Companies, and American Society of Civil Engineers. All rights reserved.

I HEREBY CERTIFY THAT THE INFORMATION SUBMITTED HEREWITH, INCLUDING ANY ATTACHMENTS, IS TRUE TO THE BEST OF MY KNOWLEDGE AND BELIEF.

NAME OF ORGANIZATION: _____

BY: _____

TITLE: _____

DATED: _____

NOTARY ATTEST:

SUBSCRIBED AND SWORN TO BEFORE ME

THIS _____ DAY OF _____, 20___

NOTARY PUBLIC - STATE OF _____

MY COMMISSION EXPIRES: _____

REQUIRED ATTACHMENTS

1. Schedule A (Current Experience).
2. Schedule B (Previous Experience).
3. Schedule C (Major Equipment).
4. Audited balance sheet for each of the last 3 years for firm named in Section 1.
5. Evidence of authority for individuals listed in Section 7 to bind organization to an agreement.
6. Resumes of officers and key individuals (including Safety Officer) of firm named in Section 1.
7. Required safety program submittals listed in Section 13.
8. Additional items as pertinent.

Copyright © 2013 National Society of Professional Engineers, American Council of Engineering Companies, and American Society of Civil Engineers. All rights reserved.

SCHEDULE A

CURRENT EXPERIENCE

Project Name	Owner's Contact Person	Design Engineer	Contract Date	Type of Work	Status	Cost of Work
	Name: Address: Telephone:	Name: Company: Telephone:				
	Name: Address: Telephone:	Name: Company: Telephone:				
	Name: Address: Telephone:	Name: Company: Telephone:				
	Name: Address: Telephone:	Name: Company: Telephone:				
	Name: Address: Telephone:	Name: Company: Telephone:				
	Name: Address: Telephone:	Name: Company: Telephone:				
	Name: Address: Telephone:	Name: Company: Telephone:				

Copyright © 2013 National Society of Professional Engineers, American Council of Engineering Companies, and American Society of Civil Engineers. All rights reserved.

SCHEDULE B

PREVIOUS EXPERIENCE (Include ALL Projects Completed within last 5 years)

Project Name	Owner's Contact Person	Design Engineer	Contract Date	Type of Work	Status	Cost of Work
	Name: Address: Telephone:	Name: Company: Telephone:				
	Name: Address: Telephone:	Name: Company: Telephone:				
	Name: Address: Telephone:	Name: Company: Telephone:				
	Name: Address: Telephone:	Name: Company: Telephone:				
	Name: Address: Telephone:	Name: Company: Telephone:				
	Name: Address: Telephone:	Name: Company: Telephone:				
	Name: Address: Telephone:	Name: Company: Telephone:				

Copyright © 2013 National Society of Professional Engineers, American Council of Engineering Companies, and American Society of Civil Engineers. All rights reserved.

SCHEDULE B

PREVIOUS EXPERIENCE (Include ALL Projects Completed within last 5 years)

Project Name	Owner's Contact Person	Design Engineer	Contract Date	Type of Work	Status	Cost of Work
	Name: Address: Telephone:	Name: Company: Telephone:				
	Name: Address: Telephone:	Name: Company: Telephone:				
	Name: Address: Telephone:	Name: Company: Telephone:				
	Name: Address: Telephone:	Name: Company: Telephone:				
	Name: Address: Telephone:	Name: Company: Telephone:				
	Name: Address: Telephone:	Name: Company: Telephone:				
	Name: Address: Telephone:	Name: Company: Telephone:				

Copyright © 2013 National Society of Professional Engineers, American Council of Engineering Companies, and American Society of Civil Engineers. All rights reserved.

SCHEDULE C - LIST OF MAJOR EQUIPMENT AVAILABLE

ITEM	PURCHASE DATE	CONDITION	ACQUIRED VALUE

EJCDC® C-451, Qualifications Statement.
Copyright © 2013 National Society of Professional Engineers, American Council of Engineering Companies, and American Society of Civil Engineers. All rights reserved.

CERTIFICATION FOR CONTRACTS, GRANTS, AND LOANS

The undersigned certifies, to the best of his or her knowledge and belief, that:

1. No Federal appropriated funds have been paid or will be paid, by or on behalf of the undersigned, to any person for influencing or attempting to influence an officer or employee of an agency, a Member of Congress, an officer or employee of Congress, or an employee of a Member of Congress in connection with the awarding of any Federal contract, the making of any Federal grant or Federal loan, and the extension, continuation, renewal, amendment, or modification of any Federal contract, grant or loan.

2. If any funds other than Federal appropriated funds have been paid or will be paid to any person for influencing or attempting to influence an officer or employee of any agency, a Member of Congress, an officer or employee of Congress, or an employee of a Member of Congress in connection with this Federal contract, grant or loan, the undersigned shall complete and submit Standard Form - LLL, "Disclosure of Lobbying Activities," in accordance with its instructions.

3. The undersigned shall require that the language of this certification be included in the award documents for all subawards at all tiers (including contracts, subcontracts, and subgrants under grants and loans) and that all subrecipients shall certify and disclose accordingly.

This certification is a material representation of fact upon which reliance was placed when this transaction was made or entered into. Submission of this certification is a prerequisite for making or entering into this transaction imposed by section 1352, title 31, U.S. Code. Any person who fails to file the required certification shall be subject to a civil penalty of not less than $10,000 and not more than $100,000 for each such failure.

_____ _____

(name) (date)

_____

(title)

o0o

(08-21-91) PN 171

Intentionally Blank

USDA
Form RD 400-6
(Rev.12-09)

Form Approved
OMB No. 0575-0018

COMPLIANCE STATEMENT

This statement relates to a proposed contract with Jersey County Rural Water Company

_____,
(Name of borrower or grantee)

who expects to finance the contract with assistance from either the Rural Housing Service (RHS), Rural Business-Cooperative Service (RBS), or the Rural Utilities Service (RUS) or their successor agencies, United States Department of Agriculture (whether by a loan, grant, loan insurance, guarantee, or other form of financial assistance). I am the undersigned bidder or prospective contractor, I represent that:

1. I ☐ have, ☐ have not, participated in a previous contract or subcontract subject to Executive Order 11246 (regarding equal employment opportunity) or a preceding similar Executive Order.

2. If I have participated in such a contract or subcontract, I ☐ have, ☐ have not, filed all compliance reports that have been required to file in connection with the contract or subcontract.

☐ If the proposed contract is for $50,000 or more: or ☐ If the proposed nonconstruction contract is for $50,000 or more and I have 50 or more employees, I also represent that:

3. I ☐ have, ☐ have not previously had contracts subject to the written affirmative action programs requirements of the Secretary of Labor.

4. If I have participated in such a contract or subcontract, ☐ I have, ☐ have not developed and placed on file at each establishment affirmative action programs as required by the rules and regulations of the Secretary of Labor.

I understand that if I have failed to file any compliance reports that have been required of me, I am not eligible and will not be eligible to have my bid considered or to enter into the proposed contract unless and until I make an arrangement regarding such reports that is satisfactory to either the RHS, RBS or RUS, or to the office where the reports are required to be filed.

I also certify that I do not maintain or provide for my employees any segregated facilities at any of my establishments, and that I do not permit my employees to perform their services at any location, under my control, where segregated facilities are maintained. I certify further that I will not maintain or provide for my employees any segregated facilities at any of my establishments, and that I will not permit my employees to perform their services at any location, under my control, where segregated facilities are maintained. I agree that a breach of this certification is a violation of the Equal Opportunity clause in my contract. As used in this certification, the term "segregated facilities" means any waiting rooms, work areas, restrooms and wash rooms, restaurants and other eating areas time clocks, locker rooms and other storage or dressing areas, parking lots, drinking fountains, recreation or entertainment areas, transportation, and housing facilities provided for employees which are segregated by explicit directive or are in fact segregated on the basis of race, creed, color, or national origin, because of habit, local custom, or otherwise. I further agree that (except where I have obtained identical certifications for proposed subcontractors for specific time periods) I will obtain identical certifications from proposed subcontractors prior to the award of subcontracts exceeding $10,000 which are not exempt from the provisions of the Equal Opportunity clause; that I will retain such certifications in my files; and that I will forward the following notice to such proposed subcontractors (except where the proposed subcontractors have submitted identical certifications for specific time periods):

According to the Paperwork Reduction Act of 1995, an agency may not conduct or sponsor, and a person is not required to respond to a collection of information unless it displays the valid OMB control number. The valid OMB control number for this information collection is 0575-0018. The time required to complete this information collection is estimated to average 10 minutes per response, including the time for reviewing instructions, searching existing data sources, gathering and maintaining the data needed, and completing and reviewing the collection of information.

Intentionally Blank

NON-COLLUSION AFFIDAVIT OF PRIME BIDDER

State of _____)

County of _____) ss.

_____, being first duly sworn, deposes and says that:

1. He is _____of_____ the Bidder that has submitted the attached Bid;

2. He is fully informed respecting the preparation and contents of the attached Bid and of all pertinent circumstances respecting such Bid;

3. Such Bid is genuine and is not a collusive or sham Bid;

4. Neither the said Bidder nor any of its officers, partners, owners, agents, representatives, employees or parties in interest, including this affiant, has in any way colluded, conspired, connived, or agreed, directly or indirectly, with any other Bidder, firm or person to submit a collusive or sham Bid in connection with the Contract for which the attached Bid has been submitted or to refrain from bidding in connection with such Contract, or has in any manner, directly or indirectly, sought by agreement or collusion or communication or conference with any other Bidder, firm or person to fix the price or prices in the attached Bid or of any other Bidder, or to fix any overhead, profit or cost element of the Bid price or the Bid price of any other Bidder, or to secure through any collusion, conspiracy, connivance or unlawful agreement any advantage against the **Jersey County Rural Water Company** (Local Public Agency) or any person interested in the proposed Contract; and

5. The price or prices quoted in the attached Bid are fair and proper and are not tainted by any collusion, conspiracy, connivance or unlawful agreement on the part of the Bidder or any of its agents, representatives, owners, employees or parties in interest, including this affiant.

(Signed)_____

_____
(Name & Title)

Subscribed and sworn to before me this

_____ day of _____, 20___.

_____

_____
(Notary Public)

My Commission Expires:_____

Intentionally Blank

EJCDC
ENGINEERS JOINT CONTRACT DOCUMENTS COMMITTEE

NOTICE OF AWARD

Date of Issuance:

Owner:	Jersey County Rural Water Company	Owner's Contract No.:	
Engineer:	Heneghan and Associates, P.C.	Engineer's Project No.:	00139-4100
Project:	Phase V System Improvements Ground Storage Tank	Contract Name:	Contract "K"

Bidder:

Bidder's Address:

TO BIDDER:

You are notified that Owner has accepted your Bid dated _____ for the above Contract, and that you are the Successful Bidder and are awarded a Contract for:

Phase V System Improvements Ground Storage Tank Contract "K"- This project consists of constructing a 200,000 gallon water storage tank, foundation, and related appurtenances.

The Contract Price of the awarded Contract is: $_____ *[note if subject to unit prices, or cost-plus]*

Five (5) unexecuted counterparts of the Agreement accompany this Notice of Award, and one copy of the Contract Documents accompanies this Notice of Award, or has been transmitted or made available to Bidder electronically.

4 sets of the Drawings will be delivered separately from the other Contract Documents.

You must comply with the following conditions precedent within 15 days of the date of receipt of this Notice of Award:

1. Deliver to Owner Five (5) counterparts of the Agreement, fully executed by Bidder.
2. Deliver with the executed Agreement(s) the Contract security performance and payment bonds and insurance documentation as specified in the Instructions to Bidders and General Conditions, Articles 2 and 6.
3. Other conditions precedent (if any):

Failure to comply with these conditions within the time specified will entitle Owner to consider you in default, annul this Notice of Award, and declare your Bid security forfeited.

Within ten days after you comply with the above conditions, Owner will return to you one fully executed counterpart of the Agreement, together with any additional copies of the Contract Documents as indicated in Paragraph 2.02 of the General Conditions.

Owner**:**

Authorized Signature

By:

Title:

Copy: Engineer

Intentionally Blank

AGREEMENT
BETWEEN OWNER AND CONTRACTOR
FOR CONSTRUCTION CONTRACT (STIPULATED PRICE)

THIS AGREEMENT is by and between Jersey County Rural Water Company ("Owner") and

("Contractor").

Owner and Contractor hereby agree as follows:

ARTICLE 1 – WORK

1.01 Contractor shall complete all Work as specified or indicated in the Contract Documents. The Work is generally described as follows:

ARTICLE 2 – THE PROJECT

2.01 The Project, of which the Work under the Contract Documents is a part, is generally described as follows: Phase V System Improvements Ground Storage Tank Contract "K"- This project consists of constructing a 200,000 gallon water storage tank, foundation, and related appurtenances.

ARTICLE 3 – ENGINEER

3.01 The Project has been designed by Heneghan and Associates, P.C.

3.02 The Owner has retained Heneghan and Associates, P.C. ("Engineer") to act as Owner's representative, assume all duties and responsibilities, and have the rights and authority assigned to Engineer in the Contract Documents in connection with the completion of the Work in accordance with the Contract Documents.

ARTICLE 4 – CONTRACT TIMES

4.01 *Time of the Essence*

A. All time limits for Milestones, if any, Substantial Completion, and completion and readiness for final payment as stated in the Contract Documents are of the essence of the Contract.

4.02 *Contract Times: Dates*

A. The Work will be substantially completed on or before June 30, 2022, and completed and ready for final payment in accordance with Paragraph 15.06 of the General Conditions on or before December 30, 2022.

B. Milestone 1 is defined as the project completed except for the testing and disinfection.

4.03 *Liquidated Damages*

A. Contractor and Owner recognize that time is of the essence as stated in Paragraph 4.01 above and that Owner will suffer financial and other losses if the Work is not completed and Milestones not achieved within the times specified in Paragraph 4.02 above, plus any extensions thereof allowed in accordance with the Contract. The parties also recognize the delays, expense, and difficulties involved in proving in a legal or arbitration proceeding the actual loss suffered by Owner if the Work is not completed on time. Accordingly, instead of

Copyright © 2013 National Society of Professional Engineers, American Council of Engineering Companies, and American Society of Civil Engineers. All rights reserved.

requiring any such proof, Owner and Contractor agree that as liquidated damages for delay (but not as a penalty):

1. Substantial Completion: Contractor shall pay Owner $800.00 or actual damages whichever is greater for each day that expires after the time (as duly adjusted pursuant to the Contract) specified in Paragraph 4.02.A above for Substantial Completion until the Work is substantially complete.

2. Completion of Remaining Work: After Substantial Completion, if Contractor shall neglect, refuse, or fail to complete the remaining Work within the Contract Time (as duly adjusted pursuant to the Contract) for completion and readiness for final payment, Contractor shall pay Owner $800.00 or actual damages whichever is greater for each day that expires after such time until the Work is completed and ready for final payment.

3. Liquidated damages for failing to timely attain Substantial Completion and final completion are not additive and will not be imposed concurrently.

4. Milestones: Contractor shall pay Owner $800.00 or actual damages whichever is greater for each day that expires after the time (as duly adjusted pursuant to the Contract) specified above for achievement of Milestone 1, the erection and painting of the tank, until Milestone 1 is achieved.

4.04 *Special Damages*

[Deleted]

ARTICLE 5 – CONTRACT PRICE

5.01 Owner shall pay Contractor for completion of the Work in accordance with the Contract Documents the amounts that follow, subject to adjustment under the Contract:

A. For all Work, at the prices stated in Contractor's Bid, attached hereto as an exhibit.

ARTICLE 6 – PAYMENT PROCEDURES

6.01 *Submittal and Processing of Payments*

A. Contractor shall submit Applications for Payment in accordance with Article 15 of the General Conditions. Applications for Payment will be processed by Engineer as provided in the General Conditions.

6.02 *Progress Payments; Retainage*

A. Owner shall make progress payments on account of the Contract Price on the basis of Contractor's Applications for Payment on or about the Last Thursday day of each month during performance of the Work as provided in Paragraph 6.02.A.1 below, provided that such Applications for Payment have been submitted in a timely manner and otherwise meet the requirements of the Contract. All such payments will be measured by the Schedule of Values established as provided in the General Conditions (and in the case of Unit Price Work based on the number of units completed) or, in the event there is no Schedule of Values, as provided elsewhere in the Contract.

1. Prior to Substantial Completion, progress payments will be made in an amount equal to the percentage indicated below but, in each case, less the aggregate of payments

Copyright © 2013 National Society of Professional Engineers, American Council of Engineering Companies, and American Society of Civil Engineers. All rights reserved.

previously made and less such amounts as Owner may withhold, including but not limited to liquidated damages, in accordance with the Contract

a. 90 percent of Work completed (with the balance being retainage); ~~If the Work has been 50 percent completed as determined by Engineer, and if the character and progress of the Work have been satisfactory to Owner and Engineer, then as long as the character and progress of the Work remain satisfactory to Owner and Engineer, there will be no additional retainage~~; and

b. 90 percent of cost of materials and equipment not incorporated in the Work (with the balance being retainage).

B. Upon Substantial Completion of the entire construction to be provided under the Contract Documents, Owner shall pay an amount sufficient to increase total payments to Contractor to 95 percent of the Work completed, less such amounts set off by Owner pursuant to Paragraph 15.01.E of the General Conditions, and less 200 percent of Engineer's estimate of the value of Work to be completed or corrected as shown on the punch list of items to be completed or corrected prior to final payment.

6.03 *Final Payment*

A. Upon final completion and acceptance of the Work in accordance with Paragraph 15.06 of the General Conditions, Owner shall pay the remainder of the Contract Price as recommended by Engineer as provided in said Paragraph 15.06.

ARTICLE 7 – INTEREST

7.01 All amounts not paid when due shall bear interest at the maximum legal rate.

ARTICLE 8 – CONTRACTOR'S REPRESENTATIONS

8.01 In order to induce Owner to enter into this Contract, Contractor makes the following representations:

A. Contractor has examined and carefully studied the Contract Documents, and any data and reference items identified in the Contract Documents.

B. Contractor has visited the Site, conducted a thorough, alert visual examination of the Site and adjacent areas, and become familiar with and is satisfied as to the general, local, and Site conditions that may affect cost, progress, and performance of the Work.

C. Contractor is familiar with and is satisfied as to all Laws and Regulations that may affect cost, progress, and performance of the Work.

D. Contractor has carefully studied all: (1) reports of explorations and tests of subsurface conditions at or adjacent to the Site and all drawings of physical conditions relating to existing surface or subsurface structures at the Site that have been identified in the ~~Supplementary~~ General Conditions, especially with respect to Technical Data in such reports and drawings, and (2) reports and drawings relating to Hazardous Environmental Conditions, if any, at or adjacent to the Site that have been identified in the ~~Supplementary~~ General Conditions, especially with respect to Technical Data in such reports and drawings.

E. Contractor has considered the information known to Contractor itself; information commonly known to contractors doing business in the locality of the Site; information and observations obtained from visits to the Site; and the Contract Documents, with respect to the effect of such information, observations, and documents on (1) the cost, progress, and

Copyright © 2013 National Society of Professional Engineers, American Council of Engineering Companies, and American Society of Civil Engineers. All rights reserved.

performance of the Work; (2) the means, methods, techniques, sequences, and procedures of construction to be employed by Contractor; and (3) Contractor's safety precautions and programs.

F. Based on the information and observations referred to in the preceding paragraph, Contractor agrees that no further examinations, investigations, explorations, tests, studies, or data are necessary for the performance of the Work at the Contract Price, within the Contract Times, and in accordance with the other terms and conditions of the Contract.

G. Contractor is aware of the general nature of work to be performed by Owner and others at the Site that relates to the Work as indicated in the Contract Documents.

H. Contractor has given Engineer written notice of all conflicts, errors, ambiguities, or discrepancies that Contractor has discovered in the Contract Documents, and the written resolution thereof by Engineer is acceptable to Contractor.

I. The Contract Documents are generally sufficient to indicate and convey understanding of all terms and conditions for performance and furnishing of the Work.

J. Contractor's entry into this Contract constitutes an incontrovertible representation by Contractor that without exception all prices in the Agreement are premised upon performing and furnishing the Work required by the Contract Documents.

ARTICLE 9 – CONTRACT DOCUMENTS

9.01 *Contents*

A. The Contract Documents consist of the following:

1. This Agreement (pages 1 to ___, inclusive).
2. Performance bond (pages ___ to ___, inclusive).
3. Payment bond (pages ___ to ___, inclusive).
4. Other bonds.
   a. ___ (pages ___ to ___, inclusive).
5. General Conditions (pages ___ to ___, inclusive).
~~6. Supplementary Conditions (pages ___ to ___, inclusive).~~
~~7.~~6. Specifications as listed in the table of contents of the Project Manual.
~~8.~~7. Drawings (not attached but incorporated by reference) consisting of ___ sheets with each sheet bearing the following general title: ___ **[or]** the Drawings listed on the attached sheet index.
~~9.~~8. Addenda (numbers ___ to ___, inclusive).
~~10.~~9. Exhibits to this Agreement (enumerated as follows):
   a. Contractor's Bid (pages ___ to ___, inclusive).
~~11.~~10. The following which may be delivered or issued on or after the Effective Date of the Contract and are not attached hereto:
   a. Notice to Proceed.
   b. Work Change Directives.

Copyright © 2013 National Society of Professional Engineers, American Council of Engineering Companies, and American Society of Civil Engineers. All rights reserved.

c. Change Orders.

d. Field Orders.

B. The documents listed in Paragraph 9.01.A are attached to this Agreement (except as expressly noted otherwise above).

C. There are no Contract Documents other than those listed above in this Article 9.

D. The Contract Documents may only be amended, modified, or supplemented as provided in the General Conditions.

ARTICLE 10 – MISCELLANEOUS

10.01 *Terms*

A. Terms used in this Agreement will have the meanings stated in the General Conditions ~~and the Supplementary Conditions~~.

10.02 *Assignment of Contract*

A. Unless expressly agreed to elsewhere in the Contract, no assignment by a party hereto of any rights under or interests in the Contract will be binding on another party hereto without the written consent of the party sought to be bound; and, specifically but without limitation, money that may become due and money that is due may not be assigned without such consent (except to the extent that the effect of this restriction may be limited by law), and unless specifically stated to the contrary in any written consent to an assignment, no assignment will release or discharge the assignor from any duty or responsibility under the Contract Documents.

10.03 *Successors and Assigns*

A. Owner and Contractor each binds itself, its successors, assigns, and legal representatives to the other party hereto, its successors, assigns, and legal representatives in respect to all covenants, agreements, and obligations contained in the Contract Documents.

10.04 *Severability*

A. Any provision or part of the Contract Documents held to be void or unenforceable under any Law or Regulation shall be deemed stricken, and all remaining provisions shall continue to be valid and binding upon Owner and Contractor, who agree that the Contract Documents shall be reformed to replace such stricken provision or part thereof with a valid and enforceable provision that comes as close as possible to expressing the intention of the stricken provision.

10.05 *Contractor's Certifications*

A. Contractor certifies that it has not engaged in corrupt, fraudulent, collusive, or coercive practices in competing for or in executing the Contract. For the purposes of this Paragraph 10.05:

1. "corrupt practice" means the offering, giving, receiving, or soliciting of any thing of value likely to influence the action of a public official in the bidding process or in the Contract execution;

2. "fraudulent practice" means an intentional misrepresentation of facts made (a) to influence the bidding process or the execution of the Contract to the detriment of Owner, (b) to establish Bid or Contract prices at artificial non-competitive levels, or (c) to deprive Owner of the benefits of free and open competition;

Copyright © 2013 National Society of Professional Engineers, American Council of Engineering Companies, and American Society of Civil Engineers. All rights reserved.

3. “collusive practice” means a scheme or arrangement between two or more Bidders, with or without the knowledge of Owner, a purpose of which is to establish Bid prices at artificial, non-competitive levels; and

4. “coercive practice” means harming or threatening to harm, directly or indirectly, persons or their property to influence their participation in the bidding process or affect the execution of the Contract.

10.06 *Other Provisions*

A. Owner stipulates that if the General Conditions that are made a part of this Contract are based on EJCDC® C-700, Standard General Conditions for the Construction Contract, published by the Engineers Joint Contract Documents Committee®, and if Owner is the party that has furnished said General Conditions, then Owner has plainly shown all modifications to the standard wording of such published document to the Contractor, through a process such as highlighting or “track changes” (redline/strikeout), or in the Supplementary Conditions.

Copyright © 2013 National Society of Professional Engineers, American Council of Engineering Companies, and American Society of Civil Engineers. All rights reserved.

IN WITNESS WHEREOF, Owner and Contractor have signed this Agreement.

This Agreement will be effective on _____ (which is the Effective Date of the Contract).

OWNER:	CONTRACTOR:
_____	_____
By: _____	By: _____
Title: _____	Title: _____
	(If Contractor is a corporation, a partnership, or a joint venture, attach evidence of authority to sign.)
Attest: _____	Attest: _____
Title: _____	Title: _____
Address for giving notices:	Address for giving notices:
_____	_____
_____	_____
_____	_____
	License No.: _____ *(where applicable)*

(If Owner is a corporation, attach evidence of authority to sign. If Owner is a public body, attach evidence of authority to sign and resolution or other documents authorizing execution of this Agreement.)

Copyright © 2013 National Society of Professional Engineers, American Council of Engineering Companies, and American Society of Civil Engineers. All rights reserved.

Intentionally Blank

CERTIFICATE OF OWNER'S ATTORNEY AND AGENCY CONCURRENCE

CERTFICATE OF OWNER'S ATTORNEY

PROJECT NAME: Phase V System Improvements Ground Storage Tank

CONTRACTOR NAME: _____

I, the undersigned, _____, the duly authorized and acting legal representative of _____, do hereby certify as follows: I have examined the attached Contract(s) and performance and payment bond(s) and the manner of execution thereof, and I am of the opinion that each of the aforesaid agreements is adequate and has been duly executed by the proper parties thereto acting through their duly authorized representatives; that said representatives have full power and authority to execute said agreements on behalf of the respective parties named thereon; and that the foregoing agreements constitute valid and legally binding obligations upon the parties executing the same in accordance with the terms, conditions, and provisions thereof.

_____

Name Date

AGENCY CONCURRENCE

As lender or insurer of funds to defray the costs of this Contract, and without liability for any payments thereunder, the Agency hereby concurs in the form, content, and execution of this Agreement.

_____

Agency Representative Date

_____

Name

Intentionally Blank

ENGINEER'S CERTIFICATION OF FINAL PLANS AND SPECIFICATIONS

PROJECT NAME: Phase V System Improvements Ground Storage Tank

The final Drawings and Specifications, other assembled Construction Contract Documents, bidding-related documents (or requests for proposals or other construction procurement documents), and any other Final Design Phase deliverables, comply with all requirements of the U.S. Department of Agriculture, Rural Utilities Service, to the best of my knowledge and professional judgment.

If the Engineers Joint Contract Documents Committee (EJCDC) documents have been used, all modifications required by RUS Bulletin 1780-26 have been made in accordance the terms of the license agreement, which states in part that the Engineer "must plainly show all changes to the Standard EJCDC Text, using 'Track Changes' (redline/strikeout), highlighting, or other means of clearly indicating additions and deletions." Such other means may include attachments indicating changes (e.g. Supplementary Conditions modifying the General Conditions).

Seth W Elliott 5/5/21

Engineer Date

Seth W. Elliott Project Manager

Name and Title

Intentionally Blank

ENGINEER'S CERTIFICATION OF COMPLIANCE WITH PROVISIONS OF THE AMERICAN IRON AND STEEL REQUIREMENTS OF SECTION 746 OF TITLE VII OF THE CONSOLIDATED APPROPRIATIONS ACT OF 2017 (DIVISION A - AGRICULTURE, RURAL DEVELOPMENT, FOOD AND DRUG ADMINISTRATION, AND RELATED AGENCIES APPROPRIATIONS ACT, 2017) AND SUBSEQUENT STATUTES MANDATING DOMESTIC PREFERENCE

DATE:

RE: Phase V System Improvements Ground Storage Tank
Jersey County Rural Water Company
00139-4100

I hereby certify that to the best of my knowledge and belief all iron and steel products referenced in the Plans, Specifications, and Bidding Documents for this project comply with Section 746 of Title VII of the Consolidated Appropriations Act of 2017 (Division A - Agriculture, Rural Development, Food and Drug Administration, and Related Agencies Appropriations Act, 2017) and subsequent statutes mandating domestic preference or are the subject of a waiver approved by the Secretary of Agriculture or designee. This certification is not intended to be a warranty in any way, but rather the designer's professional opinion that to the best of their knowledge the documents comply.

I hereby commit that to the best of my ability all iron and steel products that will be referenced in the Bid Addenda, Executed Contracts, and Change Orders will comply with Section 746 of Title VII of the Consolidated Appropriations Act of 2017 (Division A - Agriculture, Rural Development, Food and Drug Administration, and Related Agencies Appropriations Act, 2017) and subsequent statutes mandating domestic preference or will be the subject of a waiver approved by the Secretary of Agriculture or designee.

Heneghan and Associates, P.C.
Name of Engineering Firm (PRINT)

Seth W Elliott
By Authorized Representative (SIGNATURE)

Project Manager
Title

This letter is to be submitted prior to Agency authorization of Advertisement for Bids.

Intentionally Blank

EJCDC
ENGINEERS JOINT CONTRACT DOCUMENTS COMMITTEE

PERFORMANCE BOND

CONTRACTOR *(name and address)*:

SURETY *(name and address of principal place of business)*:

OWNER *(name and address)*:
Jersey County Rural Water Company
1009 State Highway 16,
Jerseyville, IL, 62052

CONSTRUCTION CONTRACT
Effective Date of the Agreement:
Amount:
Description *(name and location)*: Phase V System Improvements Ground Storage Tank Contract "K"- This project consists of constructing a 200,000 gallon water storage tank, foundation, and related appurtenances.

BOND
Bond Number:
Date *(not earlier than the Effective Date of the Agreement of the Construction Contract)*:
Amount:
Modifications to this Bond Form: ☐ None ☐ See Paragraph 16

Surety and Contractor, intending to be legally bound hereby, subject to the terms set forth below, do each cause this Performance Bond to be duly executed by an authorized officer, agent, or representative.

CONTRACTOR AS PRINCIPAL	**SURETY**
_____ *(seal)*	_____ *(seal)*
Contractor's Name and Corporate Seal	Surety's Name and Corporate Seal
By: _____	**By:** _____
Signature	Signature *(attach power of attorney)*
_____	_____
Print Name	Print Name
_____	_____
Title	Title
Attest: _____	**Attest:** _____
Signature	Signature
_____	_____
Title	Title

Notes: (1) Provide supplemental execution by any additional parties, such as joint venturers. (2) Any singular reference to Contractor, Surety, Owner, or other party shall be considered plural where applicable.

Copyright © 2013 National Society of Professional Engineers, American Council of Engineering Companies, and American Society of Civil Engineers. All rights reserved.

1. The Contractor and Surety, jointly and severally, bind themselves, their heirs, executors, administrators, successors, and assigns to the Owner for the performance of the Construction Contract, which is incorporated herein by reference.

2. If the Contractor performs the Construction Contract, the Surety and the Contractor shall have no obligation under this Bond, except when applicable to participate in a conference as provided in Paragraph 3.

3. If there is no Owner Default under the Construction Contract, the Surety's obligation under this Bond shall arise after:

3.1 The Owner first provides notice to the Contractor and the Surety that the Owner is considering declaring a Contractor Default. Such notice shall indicate whether the Owner is requesting a conference among the Owner, Contractor, and Surety to discuss the Contractor's performance. If the Owner does not request a conference, the Surety may, within five (5) business days after receipt of the Owner's notice, request such a conference. If the Surety timely requests a conference, the Owner shall attend. Unless the Owner agrees otherwise, any conference requested under this Paragraph 3.1 shall be held within ten (10) business days of the Surety's receipt of the Owner's notice. If the Owner, the Contractor, and the Surety agree, the Contractor shall be allowed a reasonable time to perform the Construction Contract, but such an agreement shall not waive the Owner's right, if any, subsequently to declare a Contractor Default;

3.2 The Owner declares a Contractor Default, terminates the Construction Contract and notifies the Surety; and

3.3 The Owner has agreed to pay the Balance of the Contract Price in accordance with the terms of the Construction Contract to the Surety or to a contractor selected to perform the Construction Contract.

4. Failure on the part of the Owner to comply with the notice requirement in Paragraph 3.1 shall not constitute a failure to comply with a condition precedent to the Surety's obligations, or release the Surety from its obligations, except to the extent the Surety demonstrates actual prejudice.

5. When the Owner has satisfied the conditions of Paragraph 3, the Surety shall promptly and at the Surety's expense take one of the following actions:

5.1 Arrange for the Contractor, with the consent of the Owner, to perform and complete the Construction Contract;

5.2 Undertake to perform and complete the Construction Contract itself, through its agents or independent contractors;

5.3 Obtain bids or negotiated proposals from qualified contractors acceptable to the Owner for a contract for performance and completion of the Construction Contract, arrange for a contract to be prepared for execution by the Owner and a contractor selected with the Owners concurrence, to be secured with performance and payment bonds executed by a qualified surety equivalent to the bonds issued on the Construction Contract, and pay to the Owner the amount of damages as described in Paragraph 7 in excess of the Balance of the Contract Price incurred by the Owner as a result of the Contractor Default; or

5.4 Waive its right to perform and complete, arrange for completion, or obtain a new contractor, and with reasonable promptness under the circumstances:

5.4.1 After investigation, determine the amount for which it may be liable to the Owner and, as soon as practicable after the amount is determined, make payment to the Owner; or

5.4.2 Deny liability in whole or in part and notify the Owner, citing the reasons for denial.

6. If the Surety does not proceed as provided in Paragraph 5 with reasonable promptness, the Surety shall be deemed to be in default on this Bond seven days after receipt of an additional written notice from the Owner to the Surety demanding that the Surety perform its obligations under this Bond, and the Owner shall be entitled to enforce any remedy available to the Owner. If the Surety proceeds as provided in Paragraph 5.4, and the Owner refuses the payment or the Surety has denied liability, in whole or in part, without further notice the Owner shall be entitled to enforce any remedy available to the Owner.

7. If the Surety elects to act under Paragraph 5.1, 5.2, or 5.3, then the responsibilities of the Surety to the Owner shall not be greater than those of the Contractor under the Construction Contract, and the responsibilities of the Owner to the Surety shall not be greater than those of the Owner under the Construction Contract. Subject to the commitment by the Owner to pay the Balance of the Contract Price, the Surety is obligated, without duplication for:

7.1 the responsibilities of the Contractor for correction of defective work and completion of the Construction Contract;

7.2 additional legal, design professional, and delay costs resulting from the Contractor's Default, and resulting from the actions or failure to act of the Surety under Paragraph 5; and

7.3 liquidated damages, or if no liquidated damages are specified in the Construction Contract, actual damages caused by delayed performance or non-performance of the Contractor.

8. If the Surety elects to act under Paragraph 5.1, 5.3, or 5.4, the Surety's liability is limited to the amount of this Bond.

9. The Surety shall not be liable to the Owner or others for obligations of the Contractor that are unrelated to the Construction Contract, and the Balance of the Contract Price shall not be reduced or set off on account of any such unrelated obligations. No right of action shall accrue on this Bond to any person or entity other than the Owner or its heirs, executors, administrators, successors, and assigns.

Copyright © 2013 National Society of Professional Engineers, American Council of Engineering Companies, and American Society of Civil Engineers. All rights reserved.

10. The Surety hereby waives notice of any change, including changes of time, to the Construction Contract or to related subcontracts, purchase orders, and other obligations.

11. Any proceeding, legal or equitable, under this Bond may be instituted in any court of competent jurisdiction in the location in which the work or part of the work is located and shall be instituted within two years after a declaration of Contractor Default or within two years after the Contractor ceased working or within two years after the Surety refuses or fails to perform its obligations under this Bond, whichever occurs first. If the provisions of this paragraph are void or prohibited by law, the minimum periods of limitations available to sureties as a defense in the jurisdiction of the suit shall be applicable.

12. Notice to the Surety, the Owner, or the Contractor shall be mailed or delivered to the address shown on the page on which their signature appears.

13. When this Bond has been furnished to comply with a statutory or other legal requirement in the location where the construction was to be performed, any provision in this Bond conflicting with said statutory or legal requirement shall be deemed deleted herefrom and provisions conforming to such statutory or other legal requirement shall be deemed incorporated herein. When so furnished, the intent is that this Bond shall be construed as a statutory bond and not as a common law bond.

14. Definitions

14.1 Balance of the Contract Price: The total amount payable by the Owner to the Contractor under the Construction Contract after all proper adjustments have been made including allowance for the Contractor for any amounts received or to be received by the Owner in settlement of insurance or other claims for damages to which the Contractor is entitled, reduced by all valid and proper payments made to or on behalf of the Contractor under the Construction Contract.

14.2 Construction Contract: The agreement between the Owner and Contractor identified on the cover page, including all Contract Documents and changes made to the agreement and the Contract Documents.

14.3 Contractor Default: Failure of the Contractor, which has not been remedied or waived, to perform or otherwise to comply with a material term of the Construction Contract.

14.4 Owner Default: Failure of the Owner, which has not been remedied or waived, to pay the Contractor as required under the Construction Contract or to perform and complete or comply with the other material terms of the Construction Contract.

14.5 Contract Documents: All the documents that comprise the agreement between the Owner and Contractor.

15. If this Bond is issued for an agreement between a contractor and subcontractor, the term Contractor in this Bond shall be deemed to be Subcontractor and the term Owner shall be deemed to be Contractor.

16. Modifications to this Bond are as follows:

Copyright © 2013 National Society of Professional Engineers, American Council of Engineering Companies, and American Society of Civil Engineers. All rights reserved.

Intentionally Blank

EJCDC
ENGINEERS JOINT CONTRACT DOCUMENTS COMMITTEE

PAYMENT BOND

CONTRACTOR *(name and address)*:

SURETY *(name and address of principal place of business)*:

OWNER *(name and address)*:

Jersey County Rural Water Company
1009 State Highway 16,
Jerseyville, IL, 62052

CONSTRUCTION CONTRACT

Effective Date of the Agreement:
Amount:
Description *(name and location)*: Phase V System Improvements Ground Storage Tank Contract "K"- This project consists of constructing a 200,000 gallon water storage tank, foundation, and related appurtenances

BOND

Bond Number:
Date *(not earlier than the Effective Date of the Agreement of the Construction Contract)*:
Amount:
Modifications to this Bond Form: ☐ None ☐ See Paragraph 18

Surety and Contractor, intending to be legally bound hereby, subject to the terms set forth below, do each cause this Payment Bond to be duly executed by an authorized officer, agent, or representative.

CONTRACTOR AS PRINCIPAL	**SURETY**
_____ *(seal)*	_____ *(seal)*
Contractor's Name and Corporate Seal	Surety's Name and Corporate Seal
By: _____	**By:** _____
Signature	Signature *(attach power of attorney)*
_____	_____
Print Name	Print Name
_____	_____
Title	Title
Attest: _____	**Attest:** _____
Signature	Signature
_____	_____
Title	Title

Notes: (1) Provide supplemental execution by any additional parties, such as joint venturers. (2) Any singular reference to Contractor, Surety, Owner, or other party shall be considered plural where applicable.

Copyright © 2013 National Society of Professional Engineers, American Council of Engineering Companies, and American Society of Civil Engineers. All rights reserved.

1. The Contractor and Surety, jointly and severally, bind themselves, their heirs, executors, administrators, successors, and assigns to the Owner to pay for labor, materials, and equipment furnished for use in the performance of the Construction Contract, which is incorporated herein by reference, subject to the following terms.

2. If the Contractor promptly makes payment of all sums due to Claimants, and defends, indemnifies, and holds harmless the Owner from claims, demands, liens, or suits by any person or entity seeking payment for labor, materials, or equipment furnished for use in the performance of the Construction Contract, then the Surety and the Contractor shall have no obligation under this Bond.

3. If there is no Owner Default under the Construction Contract, the Surety's obligation to the Owner under this Bond shall arise after the Owner has promptly notified the Contractor and the Surety (at the address described in Paragraph 13) of claims, demands, liens, or suits against the Owner or the Owner's property by any person or entity seeking payment for labor, materials, or equipment furnished for use in the performance of the Construction Contract, and tendered defense of such claims, demands, liens, or suits to the Contractor and the Surety.

4. When the Owner has satisfied the conditions in Paragraph 3, the Surety shall promptly and at the Surety's expense defend, indemnify, and hold harmless the Owner against a duly tendered claim, demand, lien, or suit.

5. The Surety's obligations to a Claimant under this Bond shall arise after the following:

    5.1 Claimants who do not have a direct contract with the Contractor,

        5.1.1 have furnished a written notice of non-payment to the Contractor, stating with substantial accuracy the amount claimed and the name of the party to whom the materials were, or equipment was, furnished or supplied or for whom the labor was done or performed, within ninety (90) days after having last performed labor or last furnished materials or equipment included in the Claim; and

        5.1.2 have sent a Claim to the Surety (at the address described in Paragraph 13).

    5.2 Claimants who are employed by or have a direct contract with the Contractor have sent a Claim to the Surety (at the address described in Paragraph 13).

6. If a notice of non-payment required by Paragraph 5.1.1 is given by the Owner to the Contractor, that is sufficient to satisfy a Claimant's obligation to furnish a written notice of non-payment under Paragraph 5.1.1.

7. When a Claimant has satisfied the conditions of Paragraph 5.1 or 5.2, whichever is applicable, the Surety shall promptly and at the Surety's expense take the following actions:

    7.1 Send an answer to the Claimant, with a copy to the Owner, within sixty (60) days after receipt of the Claim, stating the amounts that are undisputed and the basis for challenging any amounts that are disputed; and

    7.2 Pay or arrange for payment of any undisputed amounts.

    7.3 The Surety's failure to discharge its obligations under Paragraph 7.1 or 7.2 shall not be deemed to constitute a waiver of defenses the Surety or Contractor may have or acquire as to a Claim, except as to undisputed amounts for which the Surety and Claimant have reached agreement. If, however, the Surety fails to discharge its obligations under Paragraph 7.1 or 7.2, the Surety shall indemnify the Claimant for the reasonable attorney's fees the Claimant incurs thereafter to recover any sums found to be due and owing to the Claimant.

8. The Surety's total obligation shall not exceed the amount of this Bond, plus the amount of reasonable attorney's fees provided under Paragraph 7.3, and the amount of this Bond shall be credited for any payments made in good faith by the Surety.

9. Amounts owed by the Owner to the Contractor under the Construction Contract shall be used for the performance of the Construction Contract and to satisfy claims, if any, under any construction performance bond. By the Contractor furnishing and the Owner accepting this Bond, they agree that all funds earned by the Contractor in the performance of the Construction Contract are dedicated to satisfy obligations of the Contractor and Surety under this Bond, subject to the Owner's priority to use the funds for the completion of the work.

10. The Surety shall not be liable to the Owner, Claimants, or others for obligations of the Contractor that are unrelated to the Construction Contract. The Owner shall not be liable for the payment of any costs or expenses of any Claimant under this Bond, and shall have under this Bond no obligation to make payments to or give notice on behalf of Claimants, or otherwise have any obligations to Claimants under this Bond.

11. The Surety hereby waives notice of any change, including changes of time, to the Construction Contract or to related subcontracts, purchase orders, and other obligations.

Copyright © 2013 National Society of Professional Engineers, American Council of Engineering Companies, and American Society of Civil Engineers. All rights reserved.

12. No suit or action shall be commenced by a Claimant under this Bond other than in a court of competent jurisdiction in the state in which the project that is the subject of the Construction Contract is located or after the expiration of one year from the date (1) on which the Claimant sent a Claim to the Surety pursuant to Paragraph 5.1.2 or 5.2, or (2) on which the last labor or service was performed by anyone or the last materials or equipment were furnished by anyone under the Construction Contract, whichever of (1) or (2) first occurs. If the provisions of this paragraph are void or prohibited by law, the minimum period of limitation available to sureties as a defense in the jurisdiction of the suit shall be applicable.

13. Notice and Claims to the Surety, the Owner, or the Contractor shall be mailed or delivered to the address shown on the page on which their signature appears. Actual receipt of notice or Claims, however accomplished, shall be sufficient compliance as of the date received.

14. When this Bond has been furnished to comply with a statutory or other legal requirement in the location where the construction was to be performed, any provision in this Bond conflicting with said statutory or legal requirement shall be deemed deleted herefrom and provisions conforming to such statutory or other legal requirement shall be deemed incorporated herein. When so furnished, the intent is that this Bond shall be construed as a statutory bond and not as a common law bond.

15. Upon requests by any person or entity appearing to be a potential beneficiary of this Bond, the Contractor and Owner shall promptly furnish a copy of this Bond or shall permit a copy to be made.

16. **Definitions**

16.1 **Claim:** A written statement by the Claimant including at a minimum:

1. The name of the Claimant;
2. The name of the person for whom the labor was done, or materials or equipment furnished;
3. A copy of the agreement or purchase order pursuant to which labor, materials, or equipment was furnished for use in the performance of the Construction Contract;
4. A brief description of the labor, materials, or equipment furnished;
5. The date on which the Claimant last performed labor or last furnished materials or equipment for use in the performance of the Construction Contract;
6. The total amount earned by the Claimant for labor, materials, or equipment furnished as of the date of the Claim;
7. The total amount of previous payments received by the Claimant; and
8. The total amount due and unpaid to the Claimant for labor, materials, or equipment furnished as of the date of the Claim.

16.2 **Claimant:** An individual or entity having a direct contract with the Contractor or with a subcontractor of the Contractor to furnish labor, materials, or equipment for use in the performance of the Construction Contract. The term Claimant also includes any individual or entity that has rightfully asserted a claim under an applicable mechanic's lien or similar statute against the real property upon which the Project is located. The intent of this Bond shall be to include without limitation in the terms of "labor, materials, or equipment" that part of the water, gas, power, light, heat, oil, gasoline, telephone service, or rental equipment used in the Construction Contract, architectural and engineering services required for performance of the work of the Contractor and the Contractor's subcontractors, and all other items for which a mechanic's lien may be asserted in the jurisdiction where the labor, materials, or equipment were furnished.

16.3 **Construction Contract:** The agreement between the Owner and Contractor identified on the cover page, including all Contract Documents and all changes made to the agreement and the Contract Documents.

16.4 **Owner Default**: Failure of the Owner, which has not been remedied or waived, to pay the Contractor as required under the Construction Contract or to perform and complete or comply with the other material terms of the Construction Contract.

16.5 **Contract Documents:** All the documents that comprise the agreement between the Owner and Contractor.

17. If this Bond is issued for an agreement between a contractor and subcontractor, the term Contractor in this Bond shall be deemed to be Subcontractor and the term Owner shall be deemed to be Contractor.

18. Modifications to this Bond are as follows:

Copyright © 2013 National Society of Professional Engineers, American Council of Engineering Companies, and American Society of Civil Engineers. All rights reserved.

Intentionally Blank

This form is available electronically.

Form Approved – OMB No. 0505-0027
Expiration Date: 04/30/2022

Certification Regarding Debarment, Suspension, Ineligibility and Voluntary Exclusion Lower Tier Covered Transactions

AD-1048

The following statement is made in accordance with the Privacy Act of 1974 (5 U.S.C. § 552a, as amended). This certification is required by the regulations implementing Executive Order 12549, Debarment and Suspension, and 2 C.F.R. §§ 180.300, 180.335, Participants' responsibilities. The regulations were amended and published on August 31, 2005, in 70 Fed. Reg. 51865-51880. Copies of the regulations may be obtained by contacting the Department of Agriculture agency offering the proposed covered transaction.

According to the Paperwork Reduction Act of 1995 an agency may not conduct or sponsor, and a person is not required to respond to a collection of information unless it displays a valid OMB control number. The valid OMB control number for this information collection is 0505-0027. The time required to complete this information collection is estimated to average 15 minutes per response, including the time for reviewing instructions, searching existing data sources, gathering and maintaining the data needed, and completing and reviewing the collection of information. The provisions of appropriate criminal and civil fraud privacy, and other statutes may be applicable to the information provided.

(Read instructions on page two before completing certification.)

A. The prospective lower tier participant certifies, by submission of this proposal, that neither it nor its principals is presently debarred, suspended, proposed for debarment, declared ineligible, or voluntarily excluded from participation in this transaction by any Federal department or agency;

B. Where the prospective lower tier participant is unable to certify to any of the statements in this certification, such prospective participant shall attach an explanation to this proposal.

ORGANIZATION NAME	PR/AWARD NUMBER OR PROJECT NAME

NAME(S) AND TITLE(S) OF AUTHORIZED REPRESENTATIVE(S)	
SIGNATURE(S)	DATE

In accordance with Federal civil rights law and U.S. Department of Agriculture (USDA) civil rights regulations and policies, the USDA, its agencies, offices, and employees, and institutions participating in or administering USDA programs are prohibited from discriminating based on race, color, national origin, religion, sex, gender identity (including gender expression), sexual orientation, disability, age, marital status, family/parental status, income derived from a public assistance program, political beliefs, or reprisal or retaliation for prior civil rights activity, in any program or activity conducted or funded by USDA (not all bases apply to all programs). Remedies and complaint filing deadlines vary by program or incident.

Persons with disabilities who require alternative means of communication for program information (e.g., Braille, large print, audiotape, American Sign Language, etc.) should contact the responsible agency or USDA's TARGET Center at (202) 720-2600 (voice and TTY) or contact USDA through the Federal Relay Service at (800) 877-8339. Additionally, program information may be made available in languages other than English.

To file a program discrimination complaint, complete the USDA Program Discrimination Complaint Form, AD-3027, found online at How to File a Program Discrimination Complaint (https://www.ascr.usda.gov/filing-program-discrimination-complaint-usda-customer) and at any USDA office or write a letter addressed to USDA and provide in the letter all of the information requested in the form. To request a copy of the complaint form, call (866) 632-9992. Submit your completed form or letter to USDA by: (1) mail: U.S. Department of Agriculture, Office of the Assistant Secretary for Civil Rights, 1400 Independence Avenue, SW, Washington, D.C. 20250-9410; (2) fax: (202) 690-7442.

Instructions for Certification

(1) By signing and submitting this form, the prospective lower tier participant is providing the certification set out on page 1 in accordance with these instructions.

(2) The certification in this clause is a material representation of fact upon which reliance was placed when this transaction was entered into. If it is later determined that the prospective lower tier participant knowingly rendered an erroneous certification, in addition to other remedies available to the Federal Government, the department or agency with which this transaction originated may pursue available remedies, including suspension or debarment.

(3) The prospective lower tier participant shall provide immediate written notice to the person(s) to which this proposal is submitted if at any time the prospective lower tier participant learns that its certification was erroneous when submitted or has become erroneous by reason of changed circumstances.

(4) The terms "covered transaction," "debarred," "suspended," "ineligible," "lower tier covered transaction," "participant," "person," "primary covered transaction," "principal," "proposal," and "voluntarily excluded," as used in this clause, have the meanings set out in the Definitions and Coverage sections of the rules implementing Executive Order 12549, at 2 C.F.R. Parts 180 and 417. You may contact the department or agency to which this proposal is being submitted for assistance in obtaining a copy of those regulations.

(5) The prospective lower tier participant agrees by submitting this form that, should the proposed covered transaction be entered into, it shall not knowingly enter into any lower tier covered transaction with a person who is debarred, suspended, declared ineligible, or voluntarily excluded from participation in this covered transaction, unless authorized by the department or agency with which this transaction originated.

(6) The prospective lower tier participant further agrees by submitting this form that it will include this clause titled "Certification Regarding Debarment, Suspension, Ineligibility and Voluntary Exclusion - Lower Tier Covered Transactions," without modification, in all lower tier covered transactions and in all solicitations for lower tier covered transactions.

(7) A participant in a covered transaction may rely upon a certification of a prospective participant in a lower tier covered transaction that is not debarred, suspended, ineligible, or voluntarily excluded from the covered transaction, unless it knows that the certification is erroneous. A participant may decide the method and frequency by which it determines the eligibility of its principals. Each participant may, but is not required to, check the System for Award Management (SAM) database.

(8) Nothing contained in the foregoing shall be construed to require establishment of a system of records to render in good faith the certification required by this clause. The knowledge and information of a participant is not required to exceed that which is normally possessed by a prudent person in the ordinary course of business dealings.

(9) Except for transactions authorized under paragraph (5) of these instructions, if a participant in a covered transaction knowingly enters into a lower tier covered transaction with a person who is suspended, debarred, ineligible, or voluntarily excluded from participation in this transaction, in addition to other remedies available to the Federal Government, the department or agency with which this transaction originated may pursue available remedies, including suspension and/or debarment.

EJCDC
ENGINEERS JOINT CONTRACT DOCUMENTS COMMITTEE

NOTICE TO PROCEED

Owner:	Jersey County Rural Water Company	Owner's Contract No.:	
Contractor:		Contractor's Project No.:	
Engineer:	Heneghan and Associates, P.C.	Engineer's Project No.:	00139-4100
Project:	Phase V System Improvements Ground Storage Tank	Contract Name:	Contract "K"
		Effective Date of Contract:	

TO CONTRACTOR:

Owner hereby notifies Contractor that the Contract Times under the above Contract will commence to run on [_____, 20__]. *[see Paragraph 4.01 of the General Conditions]*

On that date, Contractor shall start performing its obligations under the Contract Documents. No Work shall be done at the Site prior to such date. In accordance with the Agreement, [the date of Substantial Completion is _____, and the date of readiness for final payment is_____] ***or*** [the number of days to achieve Substantial Completion is _____, and the number of days to achieve readiness for final payment is _____].

Before starting any Work at the Site, Contractor must comply with the following:
[Note any access limitations, security procedures, or other restrictions]

Owner**:**

Authorized Signature

By:

Title:

Date Issued:

Copy: Engineer

Intentionally Blank

STANDARD GENERAL CONDITIONS OF THE CONSTRUCTION CONTRACT

TABLE OF CONTENTS

Page

ARTICLE 1 – Definitions and Terminology 1
1.01 Defined Terms 1
1.02 Terminology 5
ARTICLE 2 – Preliminary Matters 6
2.01 Delivery of Bonds and Evidence of Insurance 6
2.02 Copies of Documents 7
2.03 Before Starting Construction 7
2.04 Preconstruction Conference; Designation of Authorized Representatives 7
2.05 Initial Acceptance of Schedules 7
2.06 Electronic Transmittals 8
ARTICLE 3 – Documents: Intent, Requirements, Reuse 8
3.01 Intent 8
3.02 Reference Standards 8
3.03 Reporting and Resolving Discrepancies 9
3.04 Requirements of the Contract Documents 10
3.05 Reuse of Documents 10
ARTICLE 4 – Commencement and Progress of the Work 10
4.01 Commencement of Contract Times; Notice to Proceed 10
4.02 Starting the Work 11
4.03 Reference Points 11
4.04 Progress Schedule 11
4.05 Delays in Contractor's Progress 11
ARTICLE 5 – Availability of Lands; Subsurface and Physical Conditions; Hazardous Environmental Conditions 12
5.01 Availability of Lands 12
5.02 Use of Site and Other Areas 12
5.03 Subsurface and Physical Conditions 13
5.04 Differing Subsurface or Physical Conditions 14
5.05 Underground Facilities 16
5.06 Hazardous Environmental Conditions at Site 17

Copyright © 2013 National Society of Professional Engineers, American Council of Engineering Companies, and American Society of Civil Engineers. All rights reserved.

ARTICLE 6 – Bonds and Insurance 20
6.01 Performance, Payment, and Other Bonds 20
6.02 Insurance—General Provisions 20
6.03 Contractor's Insurance 21
6.04 Owner's Liability Insurance 25
6.05 Property Insurance 25
6.06 Waiver of Rights 27
6.07 Receipt and Application of Property Insurance Proceeds 28
ARTICLE 7 – Contractor's Responsibilities 29
7.01 Supervision and Superintendence 29
7.02 Labor; Working Hours 29
7.03 Services, Materials, and Equipment 29
7.04 "Or Equals" 30
7.05 Substitutes 31
7.06 Concerning Subcontractors, Suppliers, and Others 32
7.07 Patent Fees and Royalties 34
7.08 Permits 35
7.09 Taxes 35
7.10 Laws and Regulations 35
7.11 Record Documents 36
7.12 Safety and Protection 36
7.13 Safety Representative 37
7.14 Hazard Communication Programs 37
7.15 Emergencies 37
7.16 Shop Drawings, Samples, and Other Submittals 37
7.17 Contractor's General Warranty and Guarantee 39
7.18 Indemnification 40
7.19 Delegation of Professional Design Services 41
ARTICLE 8 – Other Work at the Site 42
8.01 Other Work 42
8.02 Coordination 42
8.03 Legal Relationships 42
ARTICLE 9 – Owner's Responsibilities 43
9.01 Communications to Contractor 43

Copyright © 2013 National Society of Professional Engineers, American Council of Engineering Companies, and American Society of Civil Engineers. All rights reserved.

9.02 Replacement of Engineer 44
9.03 Furnish Data 44
9.04 Pay When Due 44
9.05 Lands and Easements; Reports, Tests, and Drawings 44
9.06 Insurance 44
9.07 Change Orders 44
9.08 Inspections, Tests, and Approvals 44
9.09 Limitations on Owner's Responsibilities 44
9.10 Undisclosed Hazardous Environmental Condition 44
9.11 Evidence of Financial Arrangements 44
9.12 Safety Programs 45
ARTICLE 10 – Engineer's Status During Construction 45
10.01 Owner's Representative 45
10.02 Visits to Site 45
10.03 Project Representative 45
10.04 Rejecting Defective Work 48
10.05 Shop Drawings, Change Orders and Payments 48
10.06 Determinations for Unit Price Work 48
10.07 Decisions on Requirements of Contract Documents and Acceptability of Work 48
10.08 Limitations on Engineer's Authority and Responsibilities 48
10.09 Compliance with Safety Program 49
10.10 American Iron & Steel 49
ARTICLE 11 – Amending the Contract Documents; Changes in the Work 49
11.01 Amending and Supplementing Contract Documents 49
11.02 Owner-Authorized Changes in the Work 50
11.03 Unauthorized Changes in the Work 50
11.04 Change of Contract Price 51
11.05 Change of Contract Times 52
11.06 Change Proposals 52
11.07 Execution of Change Orders 53
11.08 Notification to Surety 53
ARTICLE 12 – Claims 53
12.01 Claims 53
ARTICLE 13 – Cost of the Work; Allowances; Unit Price Work 54

Copyright © 2013 National Society of Professional Engineers, American Council of Engineering Companies, and American Society of Civil Engineers. All rights reserved.

13.01 Cost of the Work 54
13.02 Allowances 57
13.03 Unit Price Work 57
ARTICLE 14 – Tests and Inspections; Correction, Removal or Acceptance of Defective Work 58
14.01 Access to Work 58
14.02 Tests, Inspections, and Approvals 58
14.03 Defective Work 59
14.04 Acceptance of Defective Work 60
14.05 Uncovering Work 60
14.06 Owner May Stop the Work 60
14.07 Owner May Correct Defective Work 61
ARTICLE 15 – Payments to Contractor; Set-Offs; Completion; Correction Period 61
15.01 Progress Payments 61
15.02 Contractor's Warranty of Title 65
15.03 Substantial Completion 65
15.04 Partial Use or Occupancy 66
15.05 Final Inspection 66
15.06 Final Payment 67
15.07 Waiver of Claims 68
15.08 Correction Period 68
ARTICLE 16 – Suspension of Work and Termination 69
16.01 Owner May Suspend Work 69
16.02 Owner May Terminate for Cause 69
16.03 Owner May Terminate For Convenience 70
16.04 Contractor May Stop Work or Terminate 70
ARTICLE 17 – Final Resolution of Disputes 71
17.01 Methods and Procedures 71
ARTICLE 18 – Miscellaneous 71
18.01 Giving Notice 71
18.02 Computation of Times 71
18.03 Cumulative Remedies 71
18.04 Limitation of Damages 72
18.05 No Waiver 72
18.06 Survival of Obligations 72

Copyright © 2013 National Society of Professional Engineers, American Council of Engineering Companies, and American Society of Civil Engineers. All rights reserved.

18.07 Controlling Law 72
18.08 Headings 72
18.09 Tribal Sovereignty. 72
ARTICLE 19 – Federal Requirements 72
19.01 Agency Not a Party 72
19.02 Contract Approval 72
19.03 Conflict of Interest & Gratuities 72
19.04 Gratuities 73
19.05 Small, Minority, and Women's Businesses 73
19.06 Anti-Kickback 73
19.07 Clean Air Act (42U.S.C. 7401-767q.) and the Federal Water Pollution Control Act (33 U.S.C.1251-1387) as amended: 74
19.08 Equal Employment Opportunity 74
19.09 Byrd Anti-Lobbying Amendment (31 U.S.C. 1352) 75
19.10 Environmental Requirements 75
19.11 Contract Work Hours and Safety Standard Act (40 U.S.C. 3701-3708): 76
19.12 Debarment and Suspension (Executive Orders 12549 and 12689) 76
19.13 Procurement of Recovered Materials: 76
19.14 American Iron & Steel (AIS) Requirements ..... **Error! Bookmark not defined.**
19.15 Definitions 77
Article 20 – State of Illinois Requirements 80
20.01 Employment of Illinois Workers on Public Works 80
20.02 Substance Abuse Prevention on Public Works Projects Act 80

Copyright © 2013 National Society of Professional Engineers, American Council of Engineering Companies, and American Society of Civil Engineers. All rights reserved.

Copyright © 2013 National Society of Professional Engineers, American Council of Engineering Companies,
and American Society of Civil Engineers. All rights reserved.

ARTICLE 1 – DEFINITIONS AND TERMINOLOGY

1.01 *Defined Terms*

A. Wherever used in the Bidding Requirements or Contract Documents, a term printed with initial capital letters, including the term's singular and plural forms, will have the meaning indicated in the definitions below. In addition to terms specifically defined, terms with initial capital letters in the Contract Documents include references to identified articles and paragraphs, and the titles of other documents or forms.

1. *Addenda*—Written or graphic instruments issued prior to the opening of Bids which clarify, correct, or change the Bidding Requirements or the proposed Contract Documents.

2. *Agreement*—The written instrument, executed by Owner and Contractor, that sets forth the Contract Price and Contract Times, identifies the parties and the Engineer, and designates the specific items that are Contract Documents.

3. *Application for Payment*—The form acceptable to Engineer which is to be used by Contractor during the course of the Work in requesting progress or final payments and which is to be accompanied by such supporting documentation as is required by the Contract Documents.

4. *Bid*—The offer of a Bidder submitted on the prescribed form setting forth the prices for the Work to be performed.

5. *Bidder*—An individual or entity that submits a Bid to Owner.

6. *Bidding Documents*—The Bidding Requirements, the proposed Contract Documents, and all Addenda.

7. *Bidding Requirements*—The advertisement or invitation to bid, Instructions to Bidders, Bid Bond or other Bid security, if any, the Bid Form, and the Bid with any attachments.

8. *Change Order*—A document which is signed by Contractor and Owner and authorizes an addition, deletion, or revision in the Work or an adjustment in the Contract Price or the Contract Times, or other revision to the Contract, issued on or after the Effective Date of the Contract. The Change Order form to be used on this Project is EJCDC C-941. Agency approval is required before Change Orders are effective.

9. *Change Proposal*—A written request by Contractor, duly submitted in compliance with the procedural requirements set forth herein, seeking an adjustment in Contract Price or Contract Times, or both; contesting an initial decision by Engineer concerning the requirements of the Contract Documents or the acceptability of Work under the Contract Documents; challenging a set-off against payments due; or seeking other relief with respect to the terms of the Contract.

10. *Claim*—(a) A demand or assertion by Owner directly to Contractor, duly submitted in compliance with the procedural requirements set forth herein: seeking an adjustment of Contract Price or Contract Times, or both; contesting an initial decision by Engineer concerning the requirements of the Contract Documents or the acceptability of Work under the Contract Documents; contesting Engineer's decision regarding a Change Proposal; seeking resolution of a contractual issue that Engineer has declined to address; or seeking other relief with respect to the terms of the Contract; or (b) a demand or assertion by Contractor directly to Owner, duly submitted in compliance with the procedural requirements set forth herein, contesting Engineer's decision

Copyright © 2013 National Society of Professional Engineers, American Council of Engineering Companies, and American Society of Civil Engineers. All rights reserved.

regarding a Change Proposal; or seeking resolution of a contractual issue that Engineer has declined to address. A demand for money or services by a third party is not a Claim.

11. *Constituent of Concern*—Asbestos, petroleum, radioactive materials, polychlorinated biphenyls (PCBs), hazardous waste, and any substance, product, waste, or other material of any nature whatsoever that is or becomes listed, regulated, or addressed pursuant to (a) the Comprehensive Environmental Response, Compensation and Liability Act, 42 U.S.C. §§9601 et seq. ("CERCLA"); (b) the Hazardous Materials Transportation Act, 49 U.S.C. §§5501 et seq.; (c) the Resource Conservation and Recovery Act, 42 U.S.C. §§6901 et seq. ("RCRA"); (d) the Toxic Substances Control Act, 15 U.S.C. §§2601 et seq.; (e) the Clean Water Act, 33 U.S.C. §§1251 et seq.; (f) the Clean Air Act, 42 U.S.C. §§7401 et seq.; or (g) any other federal, state, or local statute, law, rule, regulation, ordinance, resolution, code, order, or decree regulating, relating to, or imposing liability or standards of conduct concerning, any hazardous, toxic, or dangerous waste, substance, or material.

12. *Contract*—The entire and integrated written contract between the Owner and Contractor concerning the Work.

13. *Contract Documents*—Those items so designated in the Agreement, and which together comprise the Contract.

14. *Contract Price*—The money that Owner has agreed to pay Contractor for completion of the Work in accordance with the Contract Documents. .

15. *Contract Times*—The number of days or the dates by which Contractor shall: (a) achieve Milestones, if any; (b) achieve Substantial Completion; and (c) complete the Work.

16. *Contractor*—The individual or entity with which Owner has contracted for performance of the Work.

17. *Cost of the Work*—See Paragraph 13.01 for definition.

18. *Drawings*—The part of the Contract that graphically shows the scope, extent, and character of the Work to be performed by Contractor.

19. *Effective Date of the Contract*—The date, indicated in the Agreement, on which the Contract becomes effective.

20. *Engineer*—The individual or entity named as such in the Agreement.

21. *Field Order*—A written order issued by Engineer which requires minor changes in the Work but does not change the Contract Price or the Contract Times.

22. *Hazardous Environmental Condition*—The presence at the Site of Constituents of Concern in such quantities or circumstances that may present a danger to persons or property exposed thereto. The presence at the Site of materials that are necessary for the execution of the Work, or that are to be incorporated in the Work, and that are controlled and contained pursuant to industry practices, Laws and Regulations, and the requirements of the Contract, does not establish a Hazardous Environmental Condition.

23. *Laws and Regulations; Laws or Regulations*—Any and all applicable laws, statutes, rules, regulations, ordinances, codes, and orders of any and all governmental bodies, agencies, authorities, and courts having jurisdiction.

24. *Liens*—Charges, security interests, or encumbrances upon Contract-related funds, real property, or personal property.

Copyright © 2013 National Society of Professional Engineers, American Council of Engineering Companies, and American Society of Civil Engineers. All rights reserved.

25. *Milestone*—A principal event in the performance of the Work that the Contract requires Contractor to achieve by an intermediate completion date or by a time prior to Substantial Completion of all the Work.

26. *Notice of Award*—The written notice by Owner to a Bidder of Owner's acceptance of the Bid.

27. *Notice to Proceed*—A written notice by Owner to Contractor fixing the date on which the Contract Times will commence to run and on which Contractor shall start to perform the Work.

28. *Owner*—The individual or entity with which Contractor has contracted regarding the Work, and which has agreed to pay Contractor for the performance of the Work, pursuant to the terms of the Contract.

29. *Progress Schedule*—A schedule, prepared and maintained by Contractor, describing the sequence and duration of the activities comprising the Contractor's plan to accomplish the Work within the Contract Times.

30. *Project*—The total undertaking to be accomplished for Owner by engineers, contractors, and others, including planning, study, design, construction, testing, commissioning, and start-up, and of which the Work to be performed under the Contract Documents is a part.

31. *Project Manual*—The written documents prepared for, or made available for, procuring and constructing the Work, including but not limited to the Bidding Documents or other construction procurement documents, geotechnical and existing conditions information, the Agreement, bond forms, General Conditions, ~~Supplementary Conditions,~~ and Specifications. The contents of the Project Manual may be bound in one or more volumes.

32. *Resident Project Representative*—The authorized representative of Engineer assigned to assist Engineer at the Site. As used herein, the term Resident Project Representative or "RPR" includes any assistants or field staff of Resident Project Representative.

33. *Samples*—Physical examples of materials, equipment, or workmanship that are representative of some portion of the Work and that establish the standards by which such portion of the Work will be judged.

34. *Schedule of Submittals*—A schedule, prepared and maintained by Contractor, of required submittals and the time requirements for Engineer's review of the submittals and the performance of related construction activities.

35. *Schedule of Values*—A schedule, prepared and maintained by Contractor, allocating portions of the Contract Price to various portions of the Work and used as the basis for reviewing Contractor's Applications for Payment.

36. *Shop Drawings*—All drawings, diagrams, illustrations, schedules, and other data or information that are specifically prepared or assembled by or for Contractor and submitted by Contractor to illustrate some portion of the Work. Shop Drawings, whether approved or not, are not Drawings and are not Contract Documents.

37. *Site*—Lands or areas indicated in the Contract Documents as being furnished by Owner upon which the Work is to be performed, including rights-of-way and easements, and such other lands furnished by Owner which are designated for the use of Contractor.

Copyright © 2013 National Society of Professional Engineers, American Council of Engineering Companies, and American Society of Civil Engineers. All rights reserved.

38. *Specifications*—The part of the Contract that consists of written requirements for materials, equipment, systems, standards, and workmanship as applied to the Work, and certain administrative requirements and procedural matters applicable to the Work.

39. *Subcontractor*—An individual or entity having a direct contract with Contractor or with any other Subcontractor for the performance of a part of the Work.

40. *Substantial Completion*—The time at which the Work (or a specified part thereof) has progressed to the point where, in the opinion of Engineer, the Work (or a specified part thereof) is sufficiently complete, in accordance with the Contract Documents, so that the Work (or a specified part thereof) can be utilized for the purposes for which it is intended. The terms "substantially complete" and "substantially completed" as applied to all or part of the Work refer to Substantial Completion thereof.

41. *Successful Bidder*—The Bidder whose Bid the Owner accepts, and to which the Owner makes an award of contract, subject to stated conditions.

42. *Supplementary Conditions*—~~The part of the Contract that amends or supplements these General Conditions~~. N/A

43. *Supplier*—A manufacturer, fabricator, supplier, distributor, materialman, or vendor having a direct contract with Contractor or with any Subcontractor to furnish materials or equipment to be incorporated in the Work by Contractor or a Subcontractor.

44. *Technical Data*—Those items expressly identified as Technical Data in these Standard General Conditions~~in the Supplementary Conditions~~, with respect to either (a) subsurface conditions at the Site, or physical conditions relating to existing surface or subsurface structures at the Site (except Underground Facilities) or (b) Hazardous Environmental Conditions at the Site. If no such express identifications of Technical Data have been made with respect to conditions at the Site, then the data contained in boring logs, recorded measurements of subsurface water levels, laboratory test results, and other factual, objective information regarding conditions at the Site that are set forth in any geotechnical or environmental report prepared for the Project and made available to Contractor are hereby defined as Technical Data with respect to conditions at the Site under Paragraphs 5.03, 5.04, and 5.06.

45. *Underground Facilities*—All underground pipelines, conduits, ducts, cables, wires, manholes, vaults, tanks, tunnels, or other such facilities or attachments, and any encasements containing such facilities, including but not limited to those that convey electricity, gases, steam, liquid petroleum products, telephone or other communications, fiber optic transmissions, cable television, water, wastewater, storm water, other liquids or chemicals, or traffic or other control systems.

46. *Unit Price Work*—Work to be paid for on the basis of unit prices.

47. *Work*—The entire construction or the various separately identifiable parts thereof required to be provided under the Contract Documents. Work includes and is the result of performing or providing all labor, services, and documentation necessary to produce such construction; furnishing, installing, and incorporating all materials and equipment into such construction; and may include related services such as testing, start-up, and commissioning, all as required by the Contract Documents.

48. *Work Change Directive*—A written directive to Contractor issued on or after the Effective Date of the Contract, signed by Owner and recommended by Engineer,

Copyright © 2013 National Society of Professional Engineers, American Council of Engineering Companies, and American Society of Civil Engineers. All rights reserved.

ordering an addition, deletion, or revision in the Work. A Work Change Directive cannot change Contract Price or Contract Times without a subsequent Change Order.

49. *Abnormal* Weather Conditions—Conditions of extreme or unusual weather for a given region, elevation, or season as determined by Engineer. Extreme or unusual weather that is typical for a given region, elevation, or season should not be considered Abnormal Weather Conditions.

50. Agency—The Project is financed in whole or in part by USDA Rural Utilities Service pursuant to the Consolidated Farm and Rural Development Act (7 USC Section 1921 et seq.). The Rural Utilities Service programs are administered through the USDA Rural Development offices; therefore, the Agency for these documents is USDA Rural Development.

51. Manufacturer's Certification letter is documentation provided by the manufacturer, supplier, distributor, vendor, fabricator, etc. to various entities stating that the American Iron and Steel products to be used in the project are produced in the United States in accordance with American Iron and Steel requirements. Refer to Manufacturer's Certification Letter provided in these Contract Documents.

~~50.~~52. AIS - refers to requirements mandated by Section 746 of Title VII of the Consolidated Appropriations Act of 2017 (Division A - Agriculture, Rural Development, Food and Drug Administration, and Related Agencies Appropriations Act, 2017) and subsequent statutes mandating domestic preference. The term "iron and steel products" means the following products made primarily of iron or steel: lined or unlined pipes and fittings, manhole covers and other municipal castings, hydrants, tanks, flanges, pipe clamps and restraints, valves, structural steel, reinforced precast concrete, and construction materials

1.02 *Terminology*

A. The words and terms discussed in the following paragraphs are not defined but, when used in the Bidding Requirements or Contract Documents, have the indicated meaning.

B. *Intent of Certain Terms or Adjectives*:

1. The Contract Documents include the terms "as allowed," "as approved," "as ordered," "as directed" or terms of like effect or import to authorize an exercise of professional judgment by Engineer. In addition, the adjectives "reasonable," "suitable," "acceptable," "proper," "satisfactory," or adjectives of like effect or import are used to describe an action or determination of Engineer as to the Work. It is intended that such exercise of professional judgment, action, or determination will be solely to evaluate, in general, the Work for compliance with the information in the Contract Documents and with the design concept of the Project as a functioning whole as shown or indicated in the Contract Documents (unless there is a specific statement indicating otherwise). The use of any such term or adjective is not intended to and shall not be effective to assign to Engineer any duty or authority to supervise or direct the performance of the Work, or any duty or authority to undertake responsibility contrary to the provisions of Article 10 or any other provision of the Contract Documents.

C. *Day*:

1. The word "day" means a calendar day of 24 hours measured from midnight to the next midnight.

Copyright © 2013 National Society of Professional Engineers, American Council of Engineering Companies, and American Society of Civil Engineers. All rights reserved.

D. *Defective*:

1. The word "defective," when modifying the word "Work," refers to Work that is unsatisfactory, faulty, or deficient in that it:

   a. does not conform to the Contract Documents; or

   b. does not meet the requirements of any applicable inspection, reference standard, test, or approval referred to in the Contract Documents; or

   c. has been damaged prior to Engineer's recommendation of final payment (unless responsibility for the protection thereof has been assumed by Owner at Substantial Completion in accordance with Paragraph 15.03 or 15.04).

E. *Furnish, Install, Perform, Provide*:

1. The word "furnish," when used in connection with services, materials, or equipment, shall mean to supply and deliver said services, materials, or equipment to the Site (or some other specified location) ready for use or installation and in usable or operable condition.

2. The word "install," when used in connection with services, materials, or equipment, shall mean to put into use or place in final position said services, materials, or equipment complete and ready for intended use.

3. The words "perform" or "provide," when used in connection with services, materials, or equipment, shall mean to furnish and install said services, materials, or equipment complete and ready for intended use.

4. If the Contract Documents establish an obligation of Contractor with respect to specific services, materials, or equipment, but do not expressly use any of the four words "furnish," "install," "perform," or "provide," then Contractor shall furnish and install said services, materials, or equipment complete and ready for intended use.

F. Unless stated otherwise in the Contract Documents, words or phrases that have a well-known technical or construction industry or trade meaning are used in the Contract Documents in accordance with such recognized meaning.

ARTICLE 2 – PRELIMINARY MATTERS

2.01 *Delivery of Bonds and Evidence of Insurance*

A. *Bonds*: When Contractor delivers the executed counterparts of the Agreement to Owner, Contractor shall also deliver to Owner such bonds as Contractor may be required to furnish.

B. *Evidence of Contractor's Insurance*: When Contractor delivers the executed counterparts of the Agreement to Owner, Contractor shall also deliver to Owner, with copies to each named insured and additional insured (as identified in the Standard General Conditions~~Supplementary Conditions~~ or elsewhere in the Contract), the certificates and other evidence of insurance required to be provided by Contractor in accordance with Article 6.

C. *Evidence of Owner's Insurance*: After receipt of the executed counterparts of the Agreement and all required bonds and insurance documentation, Owner shall promptly deliver to Contractor, with copies to each named insured and additional insured (as identified in the Standard General Conditions~~Supplementary Conditions~~ or otherwise), the certificates and other evidence of insurance required to be provided by Owner under Article 6.

Copyright © 2013 National Society of Professional Engineers, American Council of Engineering Companies, and American Society of Civil Engineers. All rights reserved.

2.02 *Copies of Documents*

A. Owner shall furnish to Contractor ~~four~~five ~~printed~~ copies of the Contract Documents(including one fully executed counterpart of the Agreement), and one copy in electronic portable document format (PDF). Additional printed copies will be furnished upon request at the cost of reproduction.

B. Owner shall maintain and safeguard at least one original printed record version of the Contract, including Drawings and Specifications signed and sealed by Engineer and other design professionals. Owner shall make such original printed record version of the Contract available to Contractor for review. Owner may delegate the responsibilities under this provision to Engineer.

2.03 *Before Starting Construction*

A. *Preliminary Schedules*: Within 10 days after the Effective Date of the Contract (or as otherwise specifically required by the Contract Documents), Contractor shall submit to Engineer for timely review:

1. a preliminary Progress Schedule indicating the times (numbers of days or dates) for starting and completing the various stages of the Work, including any Milestones specified in the Contract;

2. a preliminary Schedule of Submittals; and

3. a preliminary Schedule of Values for all of the Work which includes quantities and prices of items which when added together equal the Contract Price and subdivides the Work into component parts in sufficient detail to serve as the basis for progress payments during performance of the Work. Such prices will include an appropriate amount of overhead and profit applicable to each item of Work.

2.04 *Preconstruction Conference; Designation of Authorized Representatives*

A. Before any Work at the Site is started, a conference attended by Owner, Contractor, Engineer, and others as appropriate will be held to establish a working understanding among the parties as to the Work and to discuss the schedules referred to in Paragraph 2.03.A, procedures for handling Shop Drawings, Samples, and other submittals, processing Applications for Payment, electronic or digital transmittals, and maintaining required records.

B. At this conference Owner and Contractor each shall designate, in writing, a specific individual to act as its authorized representative with respect to the services and responsibilities under the Contract. Such individuals shall have the authority to transmit and receive information, render decisions relative to the Contract, and otherwise act on behalf of each respective party.

2.05 *Initial Acceptance of Schedules*

A. At least 10 days before submission of the first Application for Payment a conference, attended by Contractor, Engineer, and others as appropriate, will be held to review for acceptability to Engineer as provided below the schedules submitted in accordance with Paragraph 2.03.A. Contractor shall have an additional 10 days to make corrections and adjustments and to complete and resubmit the schedules. No progress payment shall be made to Contractor until acceptable schedules are submitted to Engineer.

1. The Progress Schedule will be acceptable to Engineer if it provides an orderly progression of the Work to completion within the Contract Times. Such acceptance will

Copyright © 2013 National Society of Professional Engineers, American Council of Engineering Companies, and American Society of Civil Engineers. All rights reserved.

not impose on Engineer responsibility for the Progress Schedule, for sequencing, scheduling, or progress of the Work, nor interfere with or relieve Contractor from Contractor's full responsibility therefor.

2. Contractor's Schedule of Submittals will be acceptable to Engineer if it provides a workable arrangement for reviewing and processing the required submittals.

3. Contractor's Schedule of Values will be acceptable to Engineer as to form and substance if it provides a reasonable allocation of the Contract Price to the component parts of the Work.

2.06 *Electronic Transmittals*

A. Except as otherwise stated elsewhere in the Contract, the Owner, Engineer, and Contractor may transmit, and shall accept, Project-related correspondence, text, data, documents, drawings, information, and graphics, including but not limited to Shop Drawings and other submittals, in electronic media or digital format, either directly, or through access to a secure Project website.

B. If the Contract does not establish protocols for electronic or digital transmittals, then Owner, Engineer, and Contractor shall jointly develop such protocols.

C. When transmitting items in electronic media or digital format, the transmitting party makes no representations as to long term compatibility, usability, or readability of the items resulting from the recipient's use of software application packages, operating systems, or computer hardware differing from those used in the drafting or transmittal of the items, or from those established in applicable transmittal protocols.

ARTICLE 3 – DOCUMENTS: INTENT, REQUIREMENTS, REUSE

3.01 *Intent*

A. The Contract Documents are complementary; what is required by one is as binding as if required by all.

B. It is the intent of the Contract Documents to describe a functionally complete project (or part thereof) to be constructed in accordance with the Contract Documents.

C. Unless otherwise stated in the Contract Documents, if there is a discrepancy between the electronic or digital versions of the Contract Documents (including any printed copies derived from such electronic or digital versions) and the printed record version, the printed record version shall govern.

D. The Contract supersedes prior negotiations, representations, and agreements, whether written or oral.

E. Engineer will issue clarifications and interpretations of the Contract Documents as provided herein.

3.02 *Reference Standards*

A. Standards Specifications, Codes, Laws and Regulations

1. Reference in the Contract Documents to standard specifications, manuals, reference standards, or codes of any technical society, organization, or association, or to Laws or Regulations, whether such reference be specific or by implication, shall mean the standard specification, manual, reference standard, code, or Laws or Regulations in effect at the time of opening of Bids (or on the Effective Date of the Contract if there

Copyright © 2013 National Society of Professional Engineers, American Council of Engineering Companies, and American Society of Civil Engineers. All rights reserved.

were no Bids), except as may be otherwise specifically stated in the Contract Documents.

2. No provision of any such standard specification, manual, reference standard, or code, or any instruction of a Supplier, shall be effective to change the duties or responsibilities of Owner, Contractor, or Engineer, or any of their subcontractors, consultants, agents, or employees, from those set forth in the part of the Contract Documents prepared by or for Engineer. No such provision or instruction shall be effective to assign to Owner, Engineer, or any of their officers, directors, members, partners, employees, agents, consultants, or subcontractors, any duty or authority to supervise or direct the performance of the Work or any duty or authority to undertake responsibility inconsistent with the provisions of the part of the Contract Documents prepared by or for Engineer.

3.03 *Reporting and Resolving Discrepancies*

A. *Reporting Discrepancies*:

1. *Contractor's Verification of Figures and Field Measurements*: Before undertaking each part of the Work, Contractor shall carefully study the Contract Documents, and check and verify pertinent figures and dimensions therein, particularly with respect to applicable field measurements. Contractor shall promptly report in writing to Engineer any conflict, error, ambiguity, or discrepancy that Contractor discovers, or has actual knowledge of, and shall not proceed with any Work affected thereby until the conflict, error, ambiguity, or discrepancy is resolved, by a clarification or interpretation by Engineer, or by an amendment or supplement to the Contract Documents issued pursuant to Paragraph 11.01.

2. *Contractor's Review of Contract Documents*: If, before or during the performance of the Work, Contractor discovers any conflict, error, ambiguity, or discrepancy within the Contract Documents, or between the Contract Documents and (a) any applicable Law or Regulation, (b) actual field conditions, (c) any standard specification, manual, reference standard, or code, or (d) any instruction of any Supplier, then Contractor shall promptly report it to Engineer in writing. Contractor shall not proceed with the Work affected thereby (except in an emergency as required by Paragraph 7.15) until the conflict, error, ambiguity, or discrepancy is resolved, by a clarification or interpretation by Engineer, or by an amendment or supplement to the Contract Documents issued pursuant to Paragraph 11.01.

3. Contractor shall not be liable to Owner or Engineer for failure to report any conflict, error, ambiguity, or discrepancy in the Contract Documents unless Contractor had actual knowledge thereof.

B. *Resolving Discrepancies*:

1. Except as may be otherwise specifically stated in the Contract Documents, the provisions of the part of the Contract Documents prepared by or for Engineer shall take precedence in resolving any conflict, error, ambiguity, or discrepancy between such provisions of the Contract Documents and:

a. the provisions of any standard specification, manual, reference standard, or code, or the instruction of any Supplier (whether or not specifically incorporated by reference as a Contract Document); or

Copyright © 2013 National Society of Professional Engineers, American Council of Engineering Companies, and American Society of Civil Engineers. All rights reserved.

b. the provisions of any Laws or Regulations applicable to the performance of the Work (unless such an interpretation of the provisions of the Contract Documents would result in violation of such Law or Regulation).

3.04 *Requirements of the Contract Documents*

A. During the performance of the Work and until final payment, Contractor and Owner shall submit to the Engineer all matters in question concerning the requirements of the Contract Documents (sometimes referred to as requests for information or interpretation—RFIs), or relating to the acceptability of the Work under the Contract Documents, as soon as possible after such matters arise. Engineer will be the initial interpreter of the requirements of the Contract Documents, and judge of the acceptability of the Work thereunder.

B. Engineer will, with reasonable promptness, render a written clarification, interpretation, or decision on the issue submitted, or initiate an amendment or supplement to the Contract Documents. Engineer's written clarification, interpretation, or decision will be final and binding on Contractor, unless it appeals by submitting a Change Proposal, and on Owner, unless it appeals by filing a Claim.

C. If a submitted matter in question concerns terms and conditions of the Contract Documents that do not involve (1) the performance or acceptability of the Work under the Contract Documents, (2) the design (as set forth in the Drawings, Specifications, or otherwise), or (3) other engineering or technical matters, then Engineer will promptly give written notice to Owner and Contractor that Engineer is unable to provide a decision or interpretation. If Owner and Contractor are unable to agree on resolution of such a matter in question, either party may pursue resolution as provided in Article 12.

3.05 *Reuse of Documents*

A. Contractor and its Subcontractors and Suppliers shall not:

1. have or acquire any title to or ownership rights in any of the Drawings, Specifications, or other documents (or copies of any thereof) prepared by or bearing the seal of Engineer or its consultants, including electronic media editions, or reuse any such Drawings, Specifications, other documents, or copies thereof on extensions of the Project or any other project without written consent of Owner and Engineer and specific written verification or adaptation by Engineer; or

2. have or acquire any title or ownership rights in any other Contract Documents, reuse any such Contract Documents for any purpose without Owner's express written consent, or violate any copyrights pertaining to such Contract Documents.

B. The prohibitions of this Paragraph 3.05 will survive final payment, or termination of the Contract. Nothing herein shall preclude Contractor from retaining copies of the Contract Documents for record purposes.

ARTICLE 4 – COMMENCEMENT AND PROGRESS OF THE WORK

4.01 *Commencement of Contract Times; Notice to Proceed*

A. The Contract Times will commence to run on the thirtieth day after the Effective Date of the Contract or, if a Notice to Proceed is given, on the day indicated in the Notice to Proceed. A Notice to Proceed may be given at any time within 30 days after the Effective Date of the Contract. ~~In no event will the Contract Times commence to run later than the sixtieth day after the day of Bid opening or the thirtieth day after the Effective Date of the Contract, whichever date is earlier.~~

Copyright © 2013 National Society of Professional Engineers, American Council of Engineering Companies, and American Society of Civil Engineers. All rights reserved.

4.02 *Starting the Work*

A. Contractor shall start to perform the Work on the date when the Contract Times commence to run. No Work shall be done at the Site prior to such date.

4.03 *Reference Points*

A. Owner shall provide engineering surveys to establish reference points for construction which in Engineer's judgment are necessary to enable Contractor to proceed with the Work. Contractor shall be responsible for laying out the Work, shall protect and preserve the established reference points and property monuments, and shall make no changes or relocations without the prior written approval of Owner. Contractor shall report to Engineer whenever any reference point or property monument is lost or destroyed or requires relocation because of necessary changes in grades or locations, and shall be responsible for the accurate replacement or relocation of such reference points or property monuments by professionally qualified personnel.

4.04 *Progress Schedule*

A. Contractor shall adhere to the Progress Schedule established in accordance with Paragraph 2.05 as it may be adjusted from time to time as provided below.

1. Contractor shall submit to Engineer for acceptance (to the extent indicated in Paragraph 2.05) proposed adjustments in the Progress Schedule that will not result in changing the Contract Times.

2. Proposed adjustments in the Progress Schedule that will change the Contract Times shall be submitted in accordance with the requirements of Article 11.

B. Contractor shall carry on the Work and adhere to the Progress Schedule during all disputes or disagreements with Owner. No Work shall be delayed or postponed pending resolution of any disputes or disagreements, or during any appeal process, except as permitted by Paragraph 16.04, or as Owner and Contractor may otherwise agree in writing.

4.05 *Delays in Contractor's Progress*

A. If Owner, Engineer, or anyone for whom Owner is responsible, delays, disrupts, or interferes with the performance or progress of the Work, then Contractor shall be entitled to an equitable adjustment in the Contract Times and Contract Price. Contractor's entitlement to an adjustment of the Contract Times is conditioned on such adjustment being essential to Contractor's ability to complete the Work within the Contract Times.

B. Contractor shall not be entitled to an adjustment in Contract Price or Contract Times for delay, disruption, or interference caused by or within the control of Contractor. Delay, disruption, and interference attributable to and within the control of a Subcontractor or Supplier shall be deemed to be within the control of Contractor.

C. If Contractor's performance or progress is delayed, disrupted, or interfered with by unanticipated causes not the fault of and beyond the control of Owner, Contractor, and those for which they are responsible, then Contractor shall be entitled to an equitable adjustment in Contract Times. Contractor's entitlement to an adjustment of the Contract Times is conditioned on such adjustment being essential to Contractor's ability to complete the Work within the Contract Times. Such an adjustment shall be Contractor's sole and exclusive remedy for the delays, disruption, and interference described in this paragraph. Causes of delay, disruption, or interference that may give rise to an adjustment in Contract Times under this paragraph include but are not limited to the following:

Copyright © 2013 National Society of Professional Engineers, American Council of Engineering Companies, and American Society of Civil Engineers. All rights reserved.

1. severe and unavoidable natural catastrophes such as fires, floods, epidemics, and earthquakes;

2. ~~abnormal weather conditions;~~ Abnormal Weather Conditions;

3. acts or failures to act of utility owners (other than those performing other work at or adjacent to the Site by arrangement with the Owner, as contemplated in Article 8); and

4. acts of war or terrorism.

D. Delays, disruption, and interference to the performance or progress of the Work resulting from the existence of a differing subsurface or physical condition, an Underground Facility that was not shown or indicated by the Contract Documents, or not shown or indicated with reasonable accuracy, and those resulting from Hazardous Environmental Conditions, are governed by Article 5.

E. Paragraph 8.03 governs delays, disruption, and interference to the performance or progress of the Work resulting from the performance of certain other work at or adjacent to the Site.

F. Contractor shall not be entitled to an adjustment in Contract Price or Contract Times for any delay, disruption, or interference if such delay is concurrent with a delay, disruption, or interference caused by or within the control of Contractor.

G. Contractor must submit any Change Proposal seeking an adjustment in Contract Price or Contract Times under this paragraph within 30 days of the commencement of the delaying, disrupting, or interfering event.

ARTICLE 5 – AVAILABILITY OF LANDS; SUBSURFACE AND PHYSICAL CONDITIONS; HAZARDOUS ENVIRONMENTAL CONDITIONS

5.01 *Availability of Lands*

A. Owner shall furnish the Site. Owner shall notify Contractor of any encumbrances or restrictions not of general application but specifically related to use of the Site with which Contractor must comply in performing the Work.

B. Upon reasonable written request, Owner shall furnish Contractor with a current statement of record legal title and legal description of the lands upon which permanent improvements are to be made and Owner's interest therein as necessary for giving notice of or filing a mechanic's or construction lien against such lands in accordance with applicable Laws and Regulations.

C. Contractor shall provide for all additional lands and access thereto that may be required for temporary construction facilities or storage of materials and equipment.

5.02 *Use of Site and Other Areas*

A. *Limitation on Use of Site and Other Areas*:

1. Contractor shall confine construction equipment, temporary construction facilities, the storage of materials and equipment, and the operations of workers to the Site, adjacent areas that Contractor has arranged to use through construction easements or otherwise, and other adjacent areas permitted by Laws and Regulations, and shall not unreasonably encumber the Site and such other adjacent areas with construction equipment or other materials or equipment. Contractor shall assume full responsibility for (a) damage to the Site; (b) damage to any such other adjacent areas used for Contractor's operations; (c) damage to any other adjacent land or areas; and (d) for injuries and losses sustained by the owners or occupants of any such land or areas;

Copyright © 2013 National Society of Professional Engineers, American Council of Engineering Companies, and American Society of Civil Engineers. All rights reserved.

provided that such damage or injuries result from the performance of the Work or from other actions or conduct of the Contractor or those for which Contractor is responsible.

2. If a damage or injury claim is made by the owner or occupant of any such land or area because of the performance of the Work, or because of other actions or conduct of the Contractor or those for which Contractor is responsible, Contractor shall (a) take immediate corrective or remedial action as required by Paragraph 7.12, or otherwise; (b) promptly attempt to settle the claim as to all parties through negotiations with such owner or occupant, or otherwise resolve the claim by arbitration or other dispute resolution proceeding, or at law; and (c) to the fullest extent permitted by Laws and Regulations, indemnify and hold harmless Owner and Engineer, and the officers, directors, members, partners, employees, agents, consultants and subcontractors of each and any of them from and against any such claim, and against all costs, losses, and damages (including but not limited to all fees and charges of engineers, architects, attorneys, and other professionals and all court or arbitration or other dispute resolution costs) arising out of or relating to any claim or action, legal or equitable, brought by any such owner or occupant against Owner, Engineer, or any other party indemnified hereunder to the extent caused directly or indirectly, in whole or in part by, or based upon, Contractor's performance of the Work, or because of other actions or conduct of the Contractor or those for which Contractor is responsible.

B. *Removal of Debris During Performance of the Work*: During the progress of the Work the Contractor shall keep the Site and other adjacent areas free from accumulations of waste materials, rubbish, and other debris. Removal and disposal of such waste materials, rubbish, and other debris shall conform to applicable Laws and Regulations.

C. *Cleaning*: Prior to Substantial Completion of the Work Contractor shall clean the Site and the Work and make it ready for utilization by Owner. At the completion of the Work Contractor shall remove from the Site and adjacent areas all tools, appliances, construction equipment and machinery, and surplus materials and shall restore to original condition all property not designated for alteration by the Contract Documents.

D. *Loading of Structures*: Contractor shall not load nor permit any part of any structure to be loaded in any manner that will endanger the structure, nor shall Contractor subject any part of the Work or adjacent structures or land to stresses or pressures that will endanger them.

5.03 *Subsurface and Physical Conditions*

A. Intentionally Blank

B. *Reports and Drawings*: Below Identifies:

1. those reports known to Owner of explorations and tests of subsurface conditions at or adjacent to the Site;

2. those drawings known to Owner of physical conditions relating to existing surface or subsurface structures at the Site (except Underground Facilities); and

3. Technical Data contained in such reports and drawings.

C. *Reliance by Contractor on Technical Data Authorized*: Contractor may rely upon the accuracy of the Technical Data expressly identified in the Supplementary Conditions with respect to such reports and drawings, but such reports and drawings are not Contract Documents. If no such express identification has been made, then Contractor may rely upon the accuracy of the Technical Data (as defined in Article 1) contained in any geotechnical or environmental report prepared for the Project and made available to Contractor. Except for such reliance

Copyright © 2013 National Society of Professional Engineers, American Council of Engineering Companies, and American Society of Civil Engineers. All rights reserved.

on Technical Data, Contractor may not rely upon or make any claim against Owner or Engineer, or any of their officers, directors, members, partners, employees, agents, consultants, or subcontractors, with respect to:

1. the completeness of such reports and drawings for Contractor's purposes, including, but not limited to, any aspects of the means, methods, techniques, sequences, and procedures of construction to be employed by Contractor, and safety precautions and programs incident thereto; or

The following reports of explorations and tests of subsurface conditions at or adjacent to the Site are known to Owner:

Report dated *[March 13, 2020, prepared by SCI Engineering, Consulting Engineers, O'Fallon, IL, entitled: "Godfrey Elevated and Jerseyville Ground Storage Tanks Madison and Jersey Counties, Illinois", consisting of 16 pages.]* **The Technical Data contained in such report upon whose accuracy Contractor may rely are** *[here indicate any such Technical Data, or state "none."] [or]* **[as indicated in the definition of Technical Data in the General Conditions.]**

~~**Report dated** *[May 2, 2000, prepared by Ecks, Wye and Tszee, Inc., Baltimore, Md., entitled: "Tests of Water Quality in Mixter River at Pembrig, NJ", consisting of 26 pages.]* **The Technical Data contained in such report upon whose accuracy Contractor may rely are** *[here indicate any such Technical Data, or state "none."] [or]* **[as indicated in the definition of Technical Data in the General Conditions.]**~~

~~The following drawings of physical conditions relating to existing surface or subsurface structures at or adjacent to the Site (except Underground Facilities) are known to Owner:~~

a. ~~**Drawings dated** *[March 2, 2000, of Route 24A Overpass Abutment, prepared by Dea & Associates, Inc., Wilmington, Del., entitled: "Record Drawings: Route No. 24A Overpass Abutment", consisting of 12 sheets numbered 001 to 012, inclusive.]*~~None of the contents of such drawings is Technical Data on whose accuracy Contractor may

D. may examine copies of reports or obtain drawings identified immediately above that were not included with the Bidding Documents at 1004 State Highway 16, Jerseyville 62052 during regular business hours or may request copies from Engineer.

5.04 *Differing Subsurface or Physical Conditions*

A. *Notice by Contractor*: If Contractor believes that any subsurface or physical condition that is uncovered or revealed at the Site either:

1. is of such a nature as to establish that any Technical Data on which Contractor is entitled to rely as provided in Paragraph 5.03 is materially inaccurate; or
2. is of such a nature as to require a change in the Drawings or Specifications; or
3. differs materially from that shown or indicated in the Contract Documents; or
4. is of an unusual nature, and differs materially from conditions ordinarily encountered and generally recognized as inherent in work of the character provided for in the Contract Documents;

then Contractor shall, promptly after becoming aware thereof and before further disturbing the subsurface or physical conditions or performing any Work in connection therewith (except in an emergency as required by Paragraph 7.15), notify Owner and Engineer in writing about such condition. Contractor shall not further disturb such condition or perform

Copyright © 2013 National Society of Professional Engineers, American Council of Engineering Companies, and American Society of Civil Engineers. All rights reserved.

any Work in connection therewith (except with respect to an emergency) until receipt of a written statement permitting Contractor to do so.

B. *Engineer's Review*: After receipt of written notice as required by the preceding paragraph, Engineer will promptly review the subsurface or physical condition in question; determine the necessity of Owner's obtaining additional exploration or tests with respect to the condition; conclude whether the condition falls within any one or more of the differing site condition categories in Paragraph 5.04.A above; obtain any pertinent cost or schedule information from Contractor; prepare recommendations to Owner regarding the Contractor's resumption of Work in connection with the subsurface or physical condition in question and the need for any change in the Drawings or Specifications; and advise Owner in writing of Engineer's findings, conclusions, and recommendations.

C. *Owner's Statement to Contractor Regarding Site Condition*: After receipt of Engineer's written findings, conclusions, and recommendations, Owner shall issue a written statement to Contractor (with a copy to Engineer) regarding the subsurface or physical condition in question, addressing the resumption of Work in connection with such condition, indicating whether any change in the Drawings or Specifications will be made, and adopting or rejecting Engineer's written findings, conclusions, and recommendations, in whole or in part.

D. *Possible Price and Times Adjustments*:

1. Contractor shall be entitled to an equitable adjustment in Contract Price or Contract Times, or both, to the extent that the existence of a differing subsurface or physical condition, or any related delay, disruption, or interference, causes an increase or decrease in Contractor's cost of, or time required for, performance of the Work; subject, however, to the following:

    a. such condition must fall within any one or more of the categories described in Paragraph 5.04.A;

    b. with respect to Work that is paid for on a unit price basis, any adjustment in Contract Price will be subject to the provisions of Paragraph 13.03; and,

    c. Contractor's entitlement to an adjustment of the Contract Times is conditioned on such adjustment being essential to Contractor's ability to complete the Work within the Contract Times.

2. Contractor shall not be entitled to any adjustment in the Contract Price or Contract Times with respect to a subsurface or physical condition if:

    a. Contractor knew of the existence of such condition at the time Contractor made a commitment to Owner with respect to Contract Price and Contract Times by the submission of a Bid or becoming bound under a negotiated contract, or otherwise; or

    b. the existence of such condition reasonably could have been discovered or revealed as a result of any examination, investigation, exploration, test, or study of the Site and contiguous areas expressly required by the Bidding Requirements or Contract Documents to be conducted by or for Contractor prior to Contractor's making such commitment; or

    c. Contractor failed to give the written notice as required by Paragraph 5.04.A.

3. If Owner and Contractor agree regarding Contractor's entitlement to and the amount or extent of any adjustment in the Contract Price or Contract Times, or both, then any such adjustment shall be set forth in a Change Order.

Copyright © 2013 National Society of Professional Engineers, American Council of Engineering Companies, and American Society of Civil Engineers. All rights reserved.

4. Contractor may submit a Change Proposal regarding its entitlement to or the amount or extent of any adjustment in the Contract Price or Contract Times, or both, no later than 30 days after Owner's issuance of the Owner's written statement to Contractor regarding the subsurface or physical condition in question.

5.05 *Underground Facilities*

A. *Contractor's Responsibilities*: The information and data shown or indicated in the Contract Documents with respect to existing Underground Facilities at or adjacent to the Site is based on information and data furnished to Owner or Engineer by the owners of such Underground Facilities, including Owner, or by others. Unless it is otherwise expressly provided in the Standard General Conditions~~Supplementary Conditions~~:

1. Owner and Engineer do not warrant or guarantee the accuracy or completeness of any such information or data provided by others; and

2. the cost of all of the following will be included in the Contract Price, and Contractor shall have full responsibility for:

a. reviewing and checking all information and data regarding existing Underground Facilities at the Site;

b. locating all Underground Facilities shown or indicated in the Contract Documents as being at the Site;

c. coordination of the Work with the owners (including Owner) of such Underground Facilities, during construction; and

d. the safety and protection of all existing Underground Facilities at the Site, and repairing any damage thereto resulting from the Work.

B. *Notice by Contractor*: If Contractor believes that an Underground Facility that is uncovered or revealed at the Site was not shown or indicated in the Contract Documents, or was not shown or indicated with reasonable accuracy, then Contractor shall, promptly after becoming aware thereof and before further disturbing conditions affected thereby or performing any Work in connection therewith (except in an emergency as required by Paragraph 7.15), identify the owner of such Underground Facility and give written notice to that owner and to Owner and Engineer.

C. *Engineer's Review*: Engineer will promptly review the Underground Facility and conclude whether such Underground Facility was not shown or indicated in the Contract Documents, or was not shown or indicated with reasonable accuracy; obtain any pertinent cost or schedule information from Contractor; prepare recommendations to Owner regarding the Contractor's resumption of Work in connection with the Underground Facility in question; determine the extent, if any, to which a change is required in the Drawings or Specifications to reflect and document the consequences of the existence or location of the Underground Facility; and advise Owner in writing of Engineer's findings, conclusions, and recommendations. During such time, Contractor shall be responsible for the safety and protection of such Underground Facility.

D. *Owner's Statement to Contractor Regarding Underground Facility*: After receipt of Engineer's written findings, conclusions, and recommendations, Owner shall issue a written statement to Contractor (with a copy to Engineer) regarding the Underground Facility in question, addressing the resumption of Work in connection with such Underground Facility, indicating whether any change in the Drawings or Specifications will be made, and adopting or rejecting Engineer's written findings, conclusions, and recommendations in whole or in part.

Copyright © 2013 National Society of Professional Engineers, American Council of Engineering Companies, and American Society of Civil Engineers. All rights reserved.

E. *Possible Price and Times Adjustments*:

1. Contractor shall be entitled to an equitable adjustment in the Contract Price or Contract Times, or both, to the extent that any existing Underground Facility at the Site that was not shown or indicated in the Contract Documents, or was not shown or indicated with reasonable accuracy, or any related delay, disruption, or interference, causes an increase or decrease in Contractor's cost of, or time required for, performance of the Work; subject, however, to the following:

   a. Contractor did not know of and could not reasonably have been expected to be aware of or to have anticipated the existence or actual location of the Underground Facility in question;

   b. With respect to Work that is paid for on a unit price basis, any adjustment in Contract Price will be subject to the provisions of Paragraph 13.03;

   c. Contractor's entitlement to an adjustment of the Contract Times is conditioned on such adjustment being essential to Contractor's ability to complete the Work within the Contract Times; and

   d. Contractor gave the notice required in Paragraph 5.05.B.

2. If Owner and Contractor agree regarding Contractor's entitlement to and the amount or extent of any adjustment in the Contract Price or Contract Times, or both, then any such adjustment shall be set forth in a Change Order.

3. Contractor may submit a Change Proposal regarding its entitlement to or the amount or extent of any adjustment in the Contract Price or Contract Times, or both, no later than 30 days after Owner's issuance of the Owner's written statement to Contractor regarding the Underground Facility in question.

5.06 *Hazardous Environmental Conditions at Site*

A. *Reports and Drawings*: No reports or drawings related to Hazardous Environmental Conditions at the Site are known to Owner.

B. *Reliance by Contractor on Technical Data Authorized*: Not Used.

~~A. *Reports and Drawings*: The Supplementary Conditions identify:~~

~~1. those reports and drawings known to Owner relating to Hazardous Environmental Conditions that have been identified at or adjacent to the Site; and~~

~~Technical Data contained in such reports and drawings.~~

~~The following reports regarding Hazardous Environmental Conditions at the Site are known to Owner:~~

~~Report dated December 10, 2012, prepared by Eph Environmental Consultants, Princeton, N.J., entitled: "Results of Investigation of Conditions at Iron Foundry at South and Front Streets, Pembrig, NJ", consisting of 27 pages. The Technical Data contained in such report upon whose accuracy Contractor may rely are *[here indicate any such Technical Data or state "none."]*~~

~~The following drawings regarding Hazardous Environmental Conditions at the Site are known to Owner:~~

Copyright © 2013 National Society of Professional Engineers, American Council of Engineering Companies, and American Society of Civil Engineers. All rights reserved.

Drawings dated November 27, 2002, prepared by Eph Environmental Consultants, Princeton, N.J., entitled: "Iron Foundry Site Conditions", consisting of 5 sheets numbered ___ to ___, inclusive.

1) All of the information in such drawings constitutes Technical Data on whose accuracy Contractor may rely, except for _____ appearing on Drawing No. _____ and _____ appearing on Drawing No. _____.

B. *Reliance by Contractor on Technical Data Authorized*: Contractor may rely upon the accuracy of the Technical Data expressly identified in the Supplementary Conditions with respect to such reports and drawings, but such reports and drawings are not Contract Documents. If no such express identification has been made, then Contractor may rely on the accuracy of the Technical Data (as defined in Article 1) contained in any geotechnical or environmental report prepared for the Project and made available to Contractor. Except for such reliance on Technical Data, Contractor may not rely upon or make any claim against Owner or Engineer, or any of their officers, directors, members, partners, employees, agents, consultants, or subcontractors with respect to:

1. the completeness of such reports and drawings for Contractor's purposes, including, but not limited to, any aspects of the means, methods, techniques, sequences and procedures of construction to be employed by Contractor and safety precautions and programs incident thereto; or

2. other data, interpretations, opinions and information contained in such reports or shown or indicated in such drawings; or

3. any Contractor interpretation of or conclusion drawn from any Technical Data or any such other data, interpretations, opinions or information.

C. Contractor shall not be responsible for removing or remediating any Hazardous Environmental Condition encountered, uncovered, or revealed at the Site unless such removal or remediation is expressly identified in the Contract Documents to be within the scope of the Work.

D. Contractor shall be responsible for controlling, containing, and duly removing all Constituents of Concern brought to the Site by Contractor, Subcontractors, Suppliers, or anyone else for whom Contractor is responsible, and for any associated costs; and for the costs of removing and remediating any Hazardous Environmental Condition created by the presence of any such Constituents of Concern.

E. If Contractor encounters, uncovers, or reveals a Hazardous Environmental Condition whose removal or remediation is not expressly identified in the Contract Documents as being within the scope of the Work, or if Contractor or anyone for whom Contractor is responsible creates a Hazardous Environmental Condition, then Contractor shall immediately: (1) secure or otherwise isolate such condition; (2) stop all Work in connection with such condition and in any area affected thereby (except in an emergency as required by Paragraph 7.15); and (3) notify Owner and Engineer (and promptly thereafter confirm such notice in writing). Owner shall promptly consult with Engineer concerning the necessity for Owner to retain a qualified expert to evaluate such condition or take corrective action, if any. Promptly after consulting with Engineer, Owner shall take such actions as are necessary to permit Owner to timely obtain required permits and provide Contractor the written notice required by Paragraph 5.06.F. If Contractor or anyone for whom Contractor is responsible created the Hazardous Environmental Condition in question, then Owner may remove and remediate the Hazardous

Copyright © 2013 National Society of Professional Engineers, American Council of Engineering Companies, and American Society of Civil Engineers. All rights reserved.

Environmental Condition, and impose a set-off against payments to account for the associated costs.

F. Contractor shall not resume Work in connection with such Hazardous Environmental Condition or in any affected area until after Owner has obtained any required permits related thereto, and delivered written notice to Contractor either (1) specifying that such condition and any affected area is or has been rendered safe for the resumption of Work, or (2) specifying any special conditions under which such Work may be resumed safely.

G. If Owner and Contractor cannot agree as to entitlement to or on the amount or extent, if any, of any adjustment in Contract Price or Contract Times, or both, as a result of such Work stoppage or such special conditions under which Work is agreed to be resumed by Contractor, then within 30 days of Owner's written notice regarding the resumption of Work, Contractor may submit a Change Proposal, or Owner may impose a set-off.

H. If after receipt of such written notice Contractor does not agree to resume such Work based on a reasonable belief it is unsafe, or does not agree to resume such Work under such special conditions, then Owner may order the portion of the Work that is in the area affected by such condition to be deleted from the Work, following the contractual change procedures in Article 11. Owner may have such deleted portion of the Work performed by Owner's own forces or others in accordance with Article 8.

I. To the fullest extent permitted by Laws and Regulations, Owner shall indemnify and hold harmless Contractor, Subcontractors, and Engineer, and the officers, directors, members, partners, employees, agents, consultants, and subcontractors of each and any of them from and against all claims, costs, losses, and damages (including but not limited to all fees and charges of engineers, architects, attorneys, and other professionals and all court or arbitration or other dispute resolution costs) arising out of or relating to a Hazardous Environmental Condition, provided that such Hazardous Environmental Condition (1) was not shown or indicated in the Drawings, Specifications, or other Contract Documents, identified as Technical Data entitled to limited reliance pursuant to Paragraph 5.06.B, or identified in the Contract Documents to be included within the scope of the Work, and (2) was not created by Contractor or by anyone for whom Contractor is responsible. Nothing in this Paragraph 5.06.H shall obligate Owner to indemnify any individual or entity from and against the consequences of that individual's or entity's own negligence.

J. To the fullest extent permitted by Laws and Regulations, Contractor shall indemnify and hold harmless Owner and Engineer, and the officers, directors, members, partners, employees, agents, consultants, and subcontractors of each and any of them from and against all claims, costs, losses, and damages (including but not limited to all fees and charges of engineers, architects, attorneys, and other professionals and all court or arbitration or other dispute resolution costs) arising out of or relating to the failure to control, contain, or remove a Constituent of Concern brought to the Site by Contractor or by anyone for whom Contractor is responsible, or to a Hazardous Environmental Condition created by Contractor or by anyone for whom Contractor is responsible. Nothing in this Paragraph 5.06.J shall obligate Contractor to indemnify any individual or entity from and against the consequences of that individual's or entity's own negligence.

K. The provisions of Paragraphs 5.03, 5.04, and 5.05 do not apply to the presence of Constituents of Concern or to a Hazardous Environmental Condition uncovered or revealed at the Site.

Copyright © 2013 National Society of Professional Engineers, American Council of Engineering Companies, and American Society of Civil Engineers. All rights reserved.

ARTICLE 6 – BONDS AND INSURANCE

6.01 *Performance, Payment, and Other Bonds*

A. Contractor shall furnish a performance bond and a payment bond, each in an amount at least equal to the Contract Price, as security for the faithful performance and payment of all of Contractor's obligations under the Contract. These bonds shall remain in effect until one year after the date when final payment becomes due or until completion of the correction period specified in Paragraph 15.08, whichever is later, except as provided otherwise by Laws or Regulations, ~~the Supplementary Conditions,~~ or other specific provisions of the Contract. Contractor shall also furnish such other bonds as are required ~~by the Supplementary Conditions or~~ other specific provisions of the Contract.

B. All bonds shall be in the form prescribed by the Contract except as provided otherwise by Laws or Regulations, and shall be executed by such sureties as are named in "Companies Holding Certificates of Authority as Acceptable Sureties on Federal Bonds and as Acceptable Reinsuring Companies" as published in Circular 570 (as amended and supplemented) by the Financial Management Service, Surety Bond Branch, U.S. Department of the Treasury. A bond signed by an agent or attorney-in-fact must be accompanied by a certified copy of that individual's authority to bind the surety. The evidence of authority shall show that it is effective on the date the agent or attorney-in-fact signed the accompanying bond.

C. Contractor shall obtain the required bonds from surety companies that are duly licensed or authorized in the jurisdiction in which the Project is located to issue bonds in the required amounts.

D. If the surety on a bond furnished by Contractor is declared bankrupt or becomes insolvent, or its right to do business is terminated in any state or jurisdiction where any part of the Project is located, or the surety ceases to meet the requirements above, then Contractor shall promptly notify Owner and Engineer and shall, within 20 days after the event giving rise to such notification, provide another bond and surety, both of which shall comply with the bond and surety requirements above.

E. If Contractor has failed to obtain a required bond, Owner may exclude the Contractor from the Site and exercise Owner's termination rights under Article 16.

F. Upon request, Owner shall provide a copy of the payment bond to any Subcontractor, Supplier, or other person or entity claiming to have furnished labor or materials used in the performance of the Work.

6.02 *Insurance—General Provisions*

A. Owner and Contractor shall obtain and maintain insurance as required in this Article ~~and in the Supplementary Conditions~~.

B. All insurance required by the Contract to be purchased and maintained by Owner or Contractor shall be obtained from insurance companies that are duly licensed or authorized, in the state or jurisdiction in which the Project is located, to issue insurance policies for the required limits and coverages. ~~Unless a different standard is indicated in the Supplementary Conditions, all~~ All companies that provide insurance policies required under this Contract shall have an A.M. Best rating of A-VII or better.

C. Contractor shall deliver to Owner, with copies to each named insured and additional insured (as identified in this Article~~, in the Supplementary Conditions,~~ or elsewhere in the Contract), certificates of insurance establishing that Contractor has obtained and is maintaining the policies, coverages, and endorsements required by the Contract. Upon request by Owner or

Copyright © 2013 National Society of Professional Engineers, American Council of Engineering Companies, and American Society of Civil Engineers. All rights reserved.

any other insured, Contractor shall also furnish other evidence of such required insurance, including but not limited to copies of policies and endorsements, and documentation of applicable self-insured retentions and deductibles. Contractor may block out (redact) any confidential premium or pricing information contained in any policy or endorsement furnished under this provision.

D. Owner shall deliver to Contractor, with copies to each named insured and additional insured (as identified in this Article~~, the Supplementary Conditions,~~ or elsewhere in the Contract), certificates of insurance establishing that Owner has obtained and is maintaining the policies, coverages, and endorsements required of Owner by the Contract (if any). Upon request by Contractor or any other insured, Owner shall also provide other evidence of such required insurance (if any), including but not limited to copies of policies and endorsements, and documentation of applicable self-insured retentions and deductibles. Owner may block out (redact) any confidential premium or pricing information contained in any policy or endorsement furnished under this provision.

E. Failure of Owner or Contractor to demand such certificates or other evidence of the other party's full compliance with these insurance requirements, or failure of Owner or Contractor to identify a deficiency in compliance from the evidence provided, shall not be construed as a waiver of the other party's obligation to obtain and maintain such insurance.

F. If either party does not purchase or maintain all of the insurance required of such party by the Contract, such party shall notify the other party in writing of such failure to purchase prior to the start of the Work, or of such failure to maintain prior to any change in the required coverage.

G. If Contractor has failed to obtain and maintain required insurance, Owner may exclude the Contractor from the Site, impose an appropriate set-off against payment, and exercise Owner's termination rights under Article 16.

H. Without prejudice to any other right or remedy, if a party has failed to obtain required insurance, the other party may elect to obtain equivalent insurance to protect such other party's interests at the expense of the party who was required to provide such coverage, and the Contract Price shall be adjusted accordingly.

I. Owner does not represent that insurance coverage and limits established in this Contract necessarily will be adequate to protect Contractor or Contractor's interests.

J. The insurance and insurance limits required herein shall not be deemed as a limitation on Contractor's liability under the indemnities granted to Owner and other individuals and entities in the Contract.

6.03 *Contractor's Insurance*

A. *Workers' Compensation*: Contractor shall purchase and maintain workers' compensation and employer's liability insurance for:

1. claims under workers' compensation, disability benefits, and other similar employee benefit acts.

2. United States Longshoreman and Harbor Workers' Compensation Act and Jones Act coverage (if applicable).

3. claims for damages because of bodily injury, occupational sickness or disease, or death of Contractor's employees (by stop-gap endorsement in monopolist worker's compensation states).

Copyright © 2013 National Society of Professional Engineers, American Council of Engineering Companies, and American Society of Civil Engineers. All rights reserved.

4. Foreign voluntary worker compensation (if applicable).

B. *Commercial General Liability—Claims Covered*: Contractor shall purchase and maintain commercial general liability insurance, covering all operations by or on behalf of Contractor, on an occurrence basis, against:

1. claims for damages because of bodily injury, sickness or disease, or death of any person other than Contractor's employees.

2. claims for damages insured by reasonably available personal injury liability coverage.

3. claims for damages, other than to the Work itself, because of injury to or destruction of tangible property wherever located, including loss of use resulting therefrom.

C. *Commercial General Liability—Form and Content*: Contractor's commercial liability policy shall be written on a 1996 (or later) ISO commercial general liability form (occurrence form) and include the following coverages and endorsements:

1. Products and completed operations coverage:

a. Such insurance shall be maintained for three years after final payment.

b. Contractor shall furnish Owner and each other additional insured (as identified ~~in the Supplementary Conditions or~~ elsewhere in the Contract) evidence of continuation of such insurance at final payment and three years thereafter.

2. Blanket contractual liability coverage, to the extent permitted by law, including but not limited to coverage of Contractor's contractual indemnity obligations in Paragraph 7.18.

3. Broad form property damage coverage.

4. Severability of interest.

5. Underground, explosion, and collapse coverage.

6. Personal injury coverage.

7. Additional insured endorsements that include both ongoing operations and products and completed operations coverage through ISO Endorsements CG 20 10 10 01 and CG 20 37 10 01 (together); or CG 20 10 07 04 and CG 20 37 07 04 (together); or their equivalent.

8. For design professional additional insureds, ISO Endorsement CG 20 32 07 04, "Additional Insured—Engineers, Architects or Surveyors Not Engaged by the Named Insured" or its equivalent.

D. *Automobile liability*: Contractor shall purchase and maintain automobile liability insurance against claims for damages because of bodily injury or death of any person or property damage arising out of the ownership, maintenance, or use of any motor vehicle. The automobile liability policy shall be written on an occurrence basis.

E. *Umbrella or excess liability*: Contractor shall purchase and maintain umbrella or excess liability insurance written over the underlying employer's liability, commercial general liability, and automobile liability insurance described in the paragraphs above. Subject to industry-standard exclusions, the coverage afforded shall follow form as to each and every one of the underlying policies.

F. *Contractor's pollution liability insurance*: Contractor shall purchase and maintain a policy covering third-party injury and property damage claims, including clean-up costs, as a result

Copyright © 2013 National Society of Professional Engineers, American Council of Engineering Companies, and American Society of Civil Engineers. All rights reserved.

of pollution conditions arising from Contractor's operations and completed operations. This insurance shall be maintained for no less than three years after final completion.

G. *Additional insureds*: The Contractor's commercial general liability, automobile liability, umbrella or excess, and pollution liability policies shall include and list as additional insureds Owner and Engineer~~, and any individuals or entities identified in the Supplementary Conditions~~; include coverage for the respective officers, directors, members, partners, employees, agents, consultants, and subcontractors of each and any of all such additional insureds; and the insurance afforded to these additional insureds shall provide primary coverage for all claims covered thereby (including as applicable those arising from both ongoing and completed operations) on a non-contributory basis. Contractor shall obtain all necessary endorsements to support these requirements.

H. *Contractor's professional liability insurance*: If Contractor will provide or furnish professional services under this Contract, through a delegation of professional design services or otherwise, then Contractor shall be responsible for purchasing and maintaining applicable professional liability insurance. This insurance shall provide protection against claims arising out of performance of professional design or related services, and caused by a negligent error, omission, or act for which the insured party is legally liable. It shall be maintained throughout the duration of the Contract and for a minimum of two years after Substantial Completion. If such professional design services are performed by a Subcontractor, and not by Contractor itself, then the requirements of this paragraph may be satisfied through the purchasing and maintenance of such insurance by such Subcontractor.

I. *General provisions*: The policies of insurance required by this Paragraph 6.03 shall:

1. include at least the specific coverages provided in this Article.

2. be written for not less than the limits of liability provided in this Article ~~and in the Supplementary Conditions,~~ or required by Laws or Regulations, whichever is greater.

3. contain a provision or endorsement that the coverage afforded will not be canceled, materially changed, or renewal refused until at least 10 days prior written notice has been given to Contractor. Within three days of receipt of any such written notice, Contractor shall provide a copy of the notice to Owner, Engineer, and each other insured under the policy.

4. remain in effect at least until final payment (and longer if expressly required in this Article) and at all times thereafter when Contractor may be correcting, removing, or replacing defective Work as a warranty or correction obligation, or otherwise, or returning to the Site to conduct other tasks arising from the Contract Documents.

5. be appropriate for the Work being performed and provide protection from claims that may arise out of or result from Contractor's performance of the Work and Contractor's other obligations under the Contract Documents, whether it is to be performed by Contractor, any Subcontractor or Supplier, or by anyone directly or indirectly employed by any of them to perform any of the Work, or by anyone for whose acts any of them may be liable.

J. The coverage requirements for specific policies of insurance must be met by such policies, and not by reference to excess or umbrella insurance provided in other policies.

K. The limits of liability for the insurance required by Paragraph 6.03 of the General Conditions shall provide coverage for not less than the following amounts or greater where required by Laws and Regulations:

Copyright © 2013 National Society of Professional Engineers, American Council of Engineering Companies, and American Society of Civil Engineers. All rights reserved.

1. Workers' Compensation, and related coverages under Paragraphs 6.03.A.1 and A.2 of the General Conditions:

State:		Statutory
Federal, if applicable (e.g., Longshoreman's):		Statutory
Jones Act coverage, if applicable:		
Bodily injury by accident, each accident	$	1,000,000
Bodily injury by disease, aggregate	$	1,000,000
Employer's Liability:		
Bodily injury, each accident	$	100,000
Bodily injury by disease, each employee	$	100,000
Bodily injury/disease aggregate	$	500,000
~~For work performed in monopolistic states, stop-gap liability coverage shall be endorsed to either the worker's compensation or commercial general liability policy with a minimum limit of:~~	~~$~~	
Foreign voluntary worker compensation		Statutory

2. Contractor's Commercial General Liability under Paragraphs 6.03.B and 6.03.C of the General Conditions:

General Aggregate	$	2,000,000
Products - Completed Operations Aggregate	$	1,000,000
Personal and Advertising Injury	$	1,000,000
Each Occurrence (Bodily Injury and Property Damage)	$	1,000,000

3. Automobile Liability under Paragraph 6.03.D. of the General Conditions:

Bodily Injury:		
Each person	$	1,000,000
Each accident	$	1,000,000

Copyright © 2013 National Society of Professional Engineers, American Council of Engineering Companies, and American Society of Civil Engineers. All rights reserved.

Property Damage:

Each accident $ 1,000,000

~~[or]~~

~~Combined Single Limit of~~ ~~$~~

4. Excess or Umbrella Liability:

Per Occurrence $ 5,000,000

General Aggregate $ 5,000,000

5. Contractor's Pollution Liability:

Each Occurrence $ 1,000,000

General Aggregate $ 1,000,000

☒ If box is checked, Contractor is not required to provide Contractor's Pollution Liability insurance under this Contract

6. Additional Insureds: Owner and Engineer

7. Contractor's Professional Liability:

Each Claim $ N/A

Annual Aggregate $ N/A

8. *Waiver of Subrogation – Jersey County Rural Water Company and Heneghan and Associates, P.C. shall be additional insured on a direct primary basis on the Waiver of Subrogation*

6.04 *Owner's Liability Insurance*

A. In addition to the insurance required to be provided by Contractor under Paragraph 6.03, Owner, at Owner's option, may purchase and maintain at Owner's expense Owner's own liability insurance as will protect Owner against claims which may arise from operations under the Contract Documents.

B. Owner's liability policies, if any, operate separately and independently from policies required to be provided by Contractor, and Contractor cannot rely upon Owner's liability policies for any of Contractor's obligations to the Owner, Engineer, or third parties.

6.05 *Property Insurance*

A. *Builder's Risk*: ~~Unless otherwise provided in the Supplementary Conditions,~~ Contractor shall purchase and maintain builder's risk insurance upon the Work on a completed value basis, in the amount of the full insurable replacement cost thereof (subject to such deductible

Copyright © 2013 National Society of Professional Engineers, American Council of Engineering Companies, and American Society of Civil Engineers. All rights reserved.

amounts as may be ~~provided in the Supplementary Conditions or~~ required by Laws and Regulations). This insurance shall:

1. include the Owner and Contractor as named insureds, and all Subcontractors~~, and any individuals or entities required by the Supplementary Conditions~~ to be insured under such builder's risk policy, as insureds or named insureds. For purposes of the remainder of this Paragraph 6.05, Paragraphs 6.06 and 6.07, ~~and any corresponding Supplementary Conditions,~~ the parties required to be insured shall collectively be referred to as "insureds."

2. be written on a builder's risk "all risk" policy form that shall at least include insurance for physical loss or damage to the Work, temporary buildings, falsework, and materials and equipment in transit, and shall insure against at least the following perils or causes of loss: fire; lightning; windstorm; riot; civil commotion; terrorism; vehicle impact; aircraft; smoke; theft; vandalism and malicious mischief; mechanical breakdown, boiler explosion, and artificially generated electric current; earthquake; volcanic activity, and other earth movement; flood; collapse; explosion; debris removal; demolition occasioned by enforcement of Laws and Regulations; and water damage (other than that caused by flood)~~; and such other perils or causes of loss as may be specifically required by the Supplementary Conditions~~. If insurance against mechanical breakdown, boiler explosion, and artificially generated electric current; earthquake; volcanic activity, and other earth movement; or flood, are not commercially available under builder's risk policies, by endorsement or otherwise, such insurance may be provided through other insurance policies acceptable to Owner and Contractor.

3. cover, as insured property, at least the following: (a) the Work and all materials, supplies, machinery, apparatus, equipment, fixtures, and other property of a similar nature that are to be incorporated into or used in the preparation, fabrication, construction, erection, or completion of the Work, including Owner-furnished or assigned property; (b) spare parts inventory required within the scope of the Contract; and (c) temporary works which are not intended to form part of the permanent constructed Work but which are intended to provide working access to the Site, or to the Work under construction, or which are intended to provide temporary support for the Work under construction, including scaffolding, form work, fences, shoring, falsework, and temporary structures.

4. cover expenses incurred in the repair or replacement of any insured property (including but not limited to fees and charges of engineers and architects).

5. extend to cover damage or loss to insured property while in temporary storage at the Site or in a storage location outside the Site (but not including property stored at the premises of a manufacturer or Supplier).

6. extend to cover damage or loss to insured property while in transit.

7. allow for partial occupation or use of the Work by Owner, such that those portions of the Work that are not yet occupied or used by Owner shall remain covered by the builder's risk insurance.

8. allow for the waiver of the insurer's subrogation rights, as set forth below.

9. provide primary coverage for all losses and damages caused by the perils or causes of loss covered.

10. not include a co-insurance clause.

Copyright © 2013 National Society of Professional Engineers, American Council of Engineering Companies, and American Society of Civil Engineers. All rights reserved.

11. include an exception for ensuing losses from physical damage or loss with respect to any defective workmanship, design, or materials exclusions.

12. include performance/hot testing and start-up.

13. be maintained in effect, subject to the provisions herein regarding Substantial Completion and partial occupancy or use of the Work by Owner, until the Work is complete.

B. *Notice of Cancellation or Change*: All the policies of insurance (and the certificates or other evidence thereof) required to be purchased and maintained in accordance with this Paragraph 6.05 will contain a provision or endorsement that the coverage afforded will not be canceled or materially changed or renewal refused until at least 10 days prior written notice has been given to the purchasing policyholder. Within three days of receipt of any such written notice, the purchasing policyholder shall provide a copy of the notice to each other insured.

C. *Deductibles*: The purchaser of any required builder's risk or property insurance shall pay for costs not covered because of the application of a policy deductible.

D. *Partial Occupancy or Use by Owner*: If Owner will occupy or use a portion or portions of the Work prior to Substantial Completion of all the Work as provided in Paragraph 15.04, then Owner (directly, if it is the purchaser of the builder's risk policy, or through Contractor) will provide notice of such occupancy or use to the builder's risk insurer. The builder's risk insurance shall not be canceled or permitted to lapse on account of any such partial use or occupancy; rather, those portions of the Work that are occupied or used by Owner may come off the builder's risk policy, while those portions of the Work not yet occupied or used by Owner shall remain covered by the builder's risk insurance.

E. *Additional Insurance*: If Contractor elects to obtain other special insurance to be included in or supplement the builder's risk or property insurance policies provided under this Paragraph 6.05, it may do so at Contractor's expense.

F. *Insurance of Other Property*: If the express insurance provisions of the Contract do not require or address the insurance of a property item or interest, such as tools, construction equipment, or other personal property owned by Contractor, a Subcontractor, or an employee of Contractor or a Subcontractor, then the entity or individual owning such property item will be responsible for deciding whether to insure it, and if so in what amount.

6.06 *Waiver of Rights*

A. All policies purchased in accordance with Paragraph 6.05, expressly including the builder's risk policy, shall contain provisions to the effect that in the event of payment of any loss or damage the insurers will have no rights of recovery against any insureds thereunder, or against Engineer or its consultants, or their officers, directors, members, partners, employees, agents, consultants, or subcontractors. Owner and Contractor waive all rights against each other and the respective officers, directors, members, partners, employees, agents, consultants, and subcontractors of each and any of them, for all losses and damages caused by, arising out of, or resulting from any of the perils or causes of loss covered by such policies and any other property insurance applicable to the Work; and, in addition, waive all such rights against Engineer, its consultants, all Subcontractors, ~~all individuals or entities identified in the Supplementary Conditions as insureds,~~ and the officers, directors, members, partners, employees, agents, consultants, and subcontractors of each and any of them, under such policies for losses and damages so caused. None of the above waivers shall extend to the rights that any party making such waiver may have to the proceeds of insurance

Copyright © 2013 National Society of Professional Engineers, American Council of Engineering Companies, and American Society of Civil Engineers. All rights reserved.

held by Owner or Contractor as trustee or fiduciary, or otherwise payable under any policy so issued.

B. Owner waives all rights against Contractor, Subcontractors, and Engineer, and the officers, directors, members, partners, employees, agents, consultants and subcontractors of each and any of them, for:

1. loss due to business interruption, loss of use, or other consequential loss extending beyond direct physical loss or damage to Owner's property or the Work caused by, arising out of, or resulting from fire or other perils whether or not insured by Owner; and

2. loss or damage to the completed Project or part thereof caused by, arising out of, or resulting from fire or other insured peril or cause of loss covered by any property insurance maintained on the completed Project or part thereof by Owner during partial occupancy or use pursuant to Paragraph 15.04, after Substantial Completion pursuant to Paragraph 15.03, or after final payment pursuant to Paragraph 15.06.

C. Any insurance policy maintained by Owner covering any loss, damage or consequential loss referred to in Paragraph 6.06.B shall contain provisions to the effect that in the event of payment of any such loss, damage, or consequential loss, the insurers will have no rights of recovery against Contractor, Subcontractors, or Engineer, or the officers, directors, members, partners, employees, agents, consultants, or subcontractors of each and any of them.

D. Contractor shall be responsible for assuring that the agreement under which a Subcontractor performs a portion of the Work contains provisions whereby the Subcontractor waives all rights against Owner, Contractor, ~~all individuals or entities identified in the Supplementary Conditions as insureds,~~ the Engineer and its consultants, and the officers, directors, members, partners, employees, agents, consultants, and subcontractors of each and any of them, for all losses and damages caused by, arising out of, relating to, or resulting from any of the perils or causes of loss covered by builder's risk insurance and any other property insurance applicable to the Work.

6.07 *Receipt and Application of Property Insurance Proceeds*

A. Any insured loss under the builder's risk and other policies of insurance required by Paragraph 6.05 will be adjusted and settled with the named insured that purchased the policy. Such named insured shall act as fiduciary for the other insureds, and give notice to such other insureds that adjustment and settlement of a claim is in progress. Any other insured may state its position regarding a claim for insured loss in writing within 15 days after notice of such claim.

B. Proceeds for such insured losses may be made payable by the insurer either jointly to multiple insureds, or to the named insured that purchased the policy in its own right and as fiduciary for other insureds, subject to the requirements of any applicable mortgage clause. A named insured receiving insurance proceeds under the builder's risk and other policies of insurance required by Paragraph 6.05 shall distribute such proceeds in accordance with such agreement as the parties in interest may reach, or as otherwise required under the dispute resolution provisions of this Contract or applicable Laws and Regulations.

C. If no other special agreement is reached, the damaged Work shall be repaired or replaced, the money so received applied on account thereof, and the Work and the cost thereof covered by Change Order, if needed.

Copyright © 2013 National Society of Professional Engineers, American Council of Engineering Companies, and American Society of Civil Engineers. All rights reserved.

ARTICLE 7 – CONTRACTOR'S RESPONSIBILITIES

7.01 *Supervision and Superintendence*

A. Contractor shall supervise, inspect, and direct the Work competently and efficiently, devoting such attention thereto and applying such skills and expertise as may be necessary to perform the Work in accordance with the Contract Documents. Contractor shall be solely responsible for the means, methods, techniques, sequences, and procedures of construction.

B. At all times during the progress of the Work, Contractor shall assign a competent resident superintendent who shall not be replaced without written notice to Owner and Engineer except under extraordinary circumstances.

7.02 *Labor; Working Hours*

A. Contractor shall provide competent, suitably qualified personnel to survey and lay out the Work and perform construction as required by the Contract Documents. Contractor shall at all times maintain good discipline and order at the Site.

B. Except as otherwise required for the safety or protection of persons or the Work or property at the Site or adjacent thereto, and except as otherwise stated in the Contract Documents, all Work at the Site shall be performed during regular working hours, Monday through Friday. Contractor will not perform Work on a Saturday, Sunday, or any legal holiday. Contractor may perform Work outside regular working hours or on Saturdays, Sundays, or legal holidays only with Owner's written consent, which will not be unreasonably withheld.

~~B.~~C. Contractor shall be responsible for the cost of any overtime pay or other expense incurred by the Owner for Engineer's services (including those of the Resident Project Representative, if any), Owner's representative, and construction observation services, occasioned by the performance of Work on Saturday, Sunday, any legal holiday, or as overtime on any regular work day. If Contractor is responsible but does not pay, or if the parties are unable to agree as to the amount owed, then Owner may impose a reasonable set-off against payments under Article 15.

7.03 *Services, Materials, and Equipment*

A. Unless otherwise specified in the Contract Documents, Contractor shall provide and assume full responsibility for all services, materials, equipment, labor, transportation, construction equipment and machinery, tools, appliances, fuel, power, light, heat, telephone, water, sanitary facilities, temporary facilities, and all other facilities and incidentals necessary for the performance, testing, start up, and completion of the Work, whether or not such items are specifically called for in the Contract Documents.

B. All materials and equipment incorporated into the Work shall be of good quality and new, except as otherwise provided in the Contract Documents. All special warranties and guarantees required by the Specifications shall expressly run to the benefit of Owner. If required by Engineer, Contractor shall furnish satisfactory evidence (including reports of required tests) as to the source, kind, and quality of materials and equipment.

C. All materials and equipment shall be stored, applied, installed, connected, erected, protected, used, cleaned, and conditioned in accordance with instructions of the applicable Supplier, except as otherwise may be provided in the Contract Documents.

~~C.~~D. All iron and steel products must meet American Iron and Steel requirements.

Copyright © 2013 National Society of Professional Engineers, American Council of Engineering Companies, and American Society of Civil Engineers. All rights reserved.

7.04 *"Or Equals"*

A. Whenever an item of material or equipment is specified or described in the Contract Documents by using the name of a proprietary item or the name of a particular Supplier, the Contract Price has been based upon Contractor furnishing such item as specified. The specification or description of such an item is intended to establish the type, function, appearance, and quality required. ~~Unless the specification or description contains or is followed by words reading that no like, equivalent, or "or equal" item is permitted~~, Contractor may request that Engineer authorize the use of other items of material or equipment, or items from other proposed suppliers under the circumstances described below.

1. If Engineer in its sole discretion determines that an item of material or equipment proposed by Contractor is functionally equal to that named and sufficiently similar so that no change in related Work will be required, Engineer shall deem it an "or equal" item. For the purposes of this paragraph, a proposed item of material or equipment will be considered functionally equal to an item so named if:

   a. in the exercise of reasonable judgment Engineer determines that:

      1) it is at least equal in materials of construction, quality, durability, appearance, strength, and design characteristics;

      2) it will reliably perform at least equally well the function and achieve the results imposed by the design concept of the completed Project as a functioning whole;

      3) it has a proven record of performance and availability of responsive service; ~~and~~.

      ~~4) it is not objectionable to Owner.~~ [Deleted]

      4) Must be compatible with existing components and equipment.

   b. Contractor certifies that, if approved and incorporated into the Work:

      1) there will be no increase in cost to the Owner or increase in Contract Times; and

      2) it will conform substantially to the detailed requirements of the item named in the Contract Documents.

B. *Contractor's Expense*: Contractor shall provide all data in support of any proposed "or equal" item at Contractor's expense.

   ~~2.~~1. Contractor shall include a Manufacturer's Certification letter for compliance with American Iron and Steel requirements in support data, if applicable. Refer to Manufacturer's Certification Letter provided in these Contract Documents. In addition, for the Deminimis Waiver, Contractor shall maintain an itemized list of incidental components and ensure that the cost is less than 5% of total materials cost for project; for the Minor Components Waiver, the Contractor shall maintain a list of products to which the minor components waiver applies and the cost of the non- domestically produced component is less than 5% of total materials cost of that product.

~~B.~~C. *Engineer's Evaluation and Determination*: Engineer will be allowed a reasonable time to evaluate each "or-equal" request. Engineer may require Contractor to furnish additional data about the proposed "or-equal" item. Engineer will be the sole judge of acceptability. No "or-equal" item will be ordered, furnished, installed, or utilized until Engineer's review is

Copyright © 2013 National Society of Professional Engineers, American Council of Engineering Companies, and American Society of Civil Engineers. All rights reserved.

complete and Engineer determines that the proposed item is an "or-equal", which will be evidenced by an approved Shop Drawing or other written communication. Engineer will advise Contractor in writing of any negative determination.

~~C.~~D. *Effect of Engineer's Determination*: Neither approval nor denial of an "or-equal" request shall result in any change in Contract Price. The Engineer's denial of an "or-equal" request shall be final and binding and may not be reversed through an appeal under any provision of the Contract Documents.

~~D.~~E. *Treatment as a Substitution Request*: If Engineer determines that an item of material or equipment proposed by Contractor does not qualify as an "or-equal" item, Contractor may request that Engineer considered the proposed item as a substitute pursuant to Paragraph 7.05.

7.05 *Substitutes*

A. Unless the specification or description of an item of material or equipment required to be furnished under the Contract Documents contains or is followed by words reading that no substitution is permitted, Contractor may request that Engineer authorize the use of other items of material or equipment under the circumstances described below. To the extent possible such requests shall be made before commencement of related construction at the Site.

1. Contractor shall submit sufficient information as provided below to allow Engineer to determine if the item of material or equipment proposed is functionally equivalent to that named and an acceptable substitute therefor. Engineer will not accept requests for review of proposed substitute items of material or equipment from anyone other than Contractor.

2. The requirements for review by Engineer will be as set forth in Paragraph 7.05.B, ~~as supplemented by the Specifications,~~ and as Engineer may decide is appropriate under the circumstances.

3. Contractor shall make written application to Engineer for review of a proposed substitute item of material or equipment that Contractor seeks to furnish or use. The application:

a. shall certify that the proposed substitute item will:

1) perform adequately the functions and achieve the results called for by the general design,

2) be similar in substance to that specified, and

3) be suited to the same use as that specified.

~~3)~~4) comply with American Iron and Steel by providing Manufacturer's Certification letter of American Iron and Steel compliance, if applicable. Refer to Manufacturer's Certification Letter provided in these Contract Documents

b. will state:

1) the extent, if any, to which the use of the proposed substitute item will necessitate a change in Contract Times,

2) whether use of the proposed substitute item in the Work will require a change in any of the Contract Documents (or in the provisions of any other direct

Copyright © 2013 National Society of Professional Engineers, American Council of Engineering Companies, and American Society of Civil Engineers. All rights reserved.

contract with Owner for other work on the Project) to adapt the design to the proposed substitute item, and

3) whether incorporation or use of the proposed substitute item in connection with the Work is subject to payment of any license fee or royalty.

c. will identify:

1) all variations of the proposed substitute item from that specified, and

2) available engineering, sales, maintenance, repair, and replacement services.

d. shall contain an itemized estimate of all costs or credits that will result directly or indirectly from use of such substitute item, including but not limited to changes in Contract Price, shared savings, costs of redesign, and claims of other contractors affected by any resulting change.

B. *Engineer's Evaluation and Determination*: Engineer will be allowed a reasonable time to evaluate each substitute request, and to obtain comments and direction from Owner. Engineer may require Contractor to furnish additional data about the proposed substitute item. Engineer will be the sole judge of acceptability. No substitute will be ordered, furnished, installed, or utilized until Engineer's review is complete and Engineer determines that the proposed item is an acceptable substitute. Engineer's determination will be evidenced by a Field Order or a proposed Change Order accounting for the substitution itself and all related impacts, including changes in Contract Price or Contract Times. Engineer will advise Contractor in writing of any negative determination.

C. *Special Guarantee*: Owner may require Contractor to furnish at Contractor's expense a special performance guarantee or other surety with respect to any substitute.

D. *Reimbursement of Engineer's Cost*: Engineer will record Engineer's costs in evaluating a substitute proposed or submitted by Contractor. Whether or not Engineer approves a substitute so proposed or submitted by Contractor, Contractor shall reimburse Owner for the reasonable charges of Engineer for evaluating each such proposed substitute. Contractor shall also reimburse Owner for the reasonable charges of Engineer for making changes in the Contract Documents (or in the provisions of any other direct contract with Owner) resulting from the acceptance of each proposed substitute.

E. *Contractor's Expense*: Contractor shall provide all data in support of any proposed substitute at Contractor's expense.

F. *Effect of Engineer's Determination*: If Engineer approves the substitution request, Contractor shall execute the proposed Change Order and proceed with the substitution. The Engineer's denial of a substitution request shall be final and binding and may not be reversed through an appeal under any provision of the Contract Documents. Contractor may challenge the scope of reimbursement costs imposed under Paragraph 7.05.D, by timely submittal of a Change Proposal.

7.06 *Concerning Subcontractors, Suppliers, and Others*

A. Contractor may retain Subcontractors and Suppliers for the performance of parts of the Work. Such Subcontractors and Suppliers must be acceptable to Owner. The Contractor shall not award work valued at more than fifty percent of the Contract Price to Subcontractor(s), without prior written approval of the Owner.

Copyright © 2013 National Society of Professional Engineers, American Council of Engineering Companies, and American Society of Civil Engineers. All rights reserved.

~~B. Contractor shall retain specific Subcontractors, Suppliers, or other individuals or entities for the performance of designated parts of the Work if required by the Contract to do so. [Deleted]~~

B. Subsequent to the submittal of Contractor's Bid or final negotiation of the terms of the Contract, Owner may not require Contractor to retain any Subcontractor, Supplier, or other individual or entity to furnish or perform any of the Work against which Contractor has reasonable objection.

C. Prior to entry into any binding subcontract or purchase order, Contractor shall submit to Owner the identity of the proposed Subcontractor or Supplier (unless Owner has already deemed such proposed Subcontractor or Supplier acceptable, during the bidding process or otherwise). Such proposed Subcontractor or Supplier shall be deemed acceptable to Owner unless Owner raises a substantive, reasonable objection within five days.

D. Owner may require the replacement of any Subcontractor, Supplier, or other individual or entity retained by Contractor to perform any part of the Work. ~~Owner also may require Contractor to retain specific replacements; provided, however, that~~ Owner may not require a replacement to which Contractor has a reasonable objection. If Contractor has submitted the identity of certain Subcontractors, Suppliers, or other individuals or entities for acceptance by Owner, and Owner has accepted it (either in writing or by failing to make written objection thereto), then Owner may subsequently revoke the acceptance of any such Subcontractor, Supplier, or other individual or entity so identified solely on the basis of substantive, reasonable objection after due investigation. Contractor shall submit an acceptable replacement for the rejected Subcontractor, Supplier, or other individual or entity.

E. If Owner requires the replacement of any Subcontractor, Supplier, or other individual or entity retained by Contractor to perform any part of the Work, then Contractor shall be entitled to an adjustment in Contract Price or Contract Times, or both, with respect to the replacement; and Contractor shall initiate a Change Proposal for such adjustment within 30 days of Owner's requirement of replacement.

F. No acceptance by Owner of any such Subcontractor, Supplier, or other individual or entity, whether initially or as a replacement, shall constitute a waiver of the right of Owner to the completion of the Work in accordance with the Contract Documents.

G. On a monthly basis Contractor shall submit to Engineer a complete list of all Subcontractors and Suppliers having a direct contract with Contractor, and of all other Subcontractors and Suppliers known to Contractor at the time of submittal.

H. Contractor shall be fully responsible to Owner and Engineer for all acts and omissions of the Subcontractors, Suppliers, and other individuals or entities performing or furnishing any of the Work just as Contractor is responsible for Contractor's own acts and omissions.

I. Contractor shall be solely responsible for scheduling and coordinating the work of Subcontractors, Suppliers, and all other individuals or entities performing or furnishing any of the Work.

J. Contractor shall restrict all Subcontractors, Suppliers, and such other individuals or entities performing or furnishing any of the Work from communicating with Engineer or Owner, except through Contractor or in case of an emergency, or as otherwise expressly allowed herein.

Copyright © 2013 National Society of Professional Engineers, American Council of Engineering Companies, and American Society of Civil Engineers. All rights reserved.

K. The divisions and sections of the Specifications and the identifications of any Drawings shall not control Contractor in dividing the Work among Subcontractors or Suppliers or delineating the Work to be performed by any specific trade.

L. All Work performed for Contractor by a Subcontractor or Supplier shall be pursuant to an appropriate contractual agreement that specifically binds the Subcontractor or Supplier to the applicable terms and conditions of the Contract Documents for the benefit of Owner and Engineer.

M. Owner may furnish to any Subcontractor or Supplier, to the extent practicable, information about amounts paid to Contractor on account of Work performed for Contractor by the particular Subcontractor or Supplier.

N. Nothing in the Contract Documents:

1. shall create for the benefit of any such Subcontractor, Supplier, or other individual or entity any contractual relationship between Owner or Engineer and any such Subcontractor, Supplier, or other individual or entity; nor

2. shall create any obligation on the part of Owner or Engineer to pay or to see to the payment of any money due any such Subcontractor, Supplier, or other individual or entity except as may otherwise be required by Laws and Regulations.

7.07 *Patent Fees and Royalties*

A. Contractor shall pay all license fees and royalties and assume all costs incident to the use in the performance of the Work or the incorporation in the Work of any invention, design, process, product, or device which is the subject of patent rights or copyrights held by others. If a particular invention, design, process, product, or device is specified in the Contract Documents for use in the performance of the Work and if, to the actual knowledge of Owner or Engineer, its use is subject to patent rights or copyrights calling for the payment of any license fee or royalty to others, the existence of such rights shall be disclosed by Owner in the Contract Documents.

B. To the fullest extent permitted by Laws and Regulations, Owner shall indemnify and hold harmless Contractor, and its officers, directors, members, partners, employees, agents, consultants, and subcontractors from and against all claims, costs, losses, and damages (including but not limited to all fees and charges of engineers, architects, attorneys, and other professionals, and all court or arbitration or other dispute resolution costs) arising out of or relating to any infringement of patent rights or copyrights incident to the use in the performance of the Work or resulting from the incorporation in the Work of any invention, design, process, product, or device specified in the Contract Documents, but not identified as being subject to payment of any license fee or royalty to others required by patent rights or copyrights.

C. To the fullest extent permitted by Laws and Regulations, Contractor shall indemnify and hold harmless Owner and Engineer, and the officers, directors, members, partners, employees, agents, consultants and subcontractors of each and any of them from and against all claims, costs, losses, and damages (including but not limited to all fees and charges of engineers, architects, attorneys, and other professionals and all court or arbitration or other dispute resolution costs) arising out of or relating to any infringement of patent rights or copyrights incident to the use in the performance of the Work or resulting from the incorporation in the Work of any invention, design, process, product, or device not specified in the Contract Documents.

Copyright © 2013 National Society of Professional Engineers, American Council of Engineering Companies, and American Society of Civil Engineers. All rights reserved.

7.08 *Permits*

A. Unless otherwise provided in the Contract Documents, Contractor shall obtain and pay for all construction permits and licenses. Owner shall assist Contractor, when necessary, in obtaining such permits and licenses. Contractor shall pay all governmental charges and inspection fees necessary for the prosecution of the Work which are applicable at the time of the submission of Contractor's Bid (or when Contractor became bound under a negotiated contract). Owner shall pay all charges of utility owners for connections for providing permanent service to the Work

7.09 *Taxes*

A. Contractor shall pay all sales, consumer, use, and other similar taxes required to be paid by Contractor in accordance with the Laws and Regulations of the place of the Project which are applicable during the performance of the Work.

B. Owner is exempt from payment of sales and compensating use taxes of the State of Illinois and of cities and counties thereof on all materials to be incorporated into the Work.

1. Owner will furnish the required certificates of tax exemption to Contractor for use in the purchase of supplies and materials to be incorporated into the Work.

~~1.~~2. Owner's exemption does not apply to construction tools, machinery, equipment, or other property purchased by or leased by the Contractor, or to supplies or materials not incorporated into the Work.

7.10 *Laws and Regulations*

A. Contractor shall give all notices required by and shall comply with all Laws and Regulations applicable to the performance of the Work. Except where otherwise expressly required by applicable Laws and Regulations, neither Owner nor Engineer shall be responsible for monitoring Contractor's compliance with any Laws or Regulations.

B. If Contractor performs any Work or takes any other action knowing or having reason to know that it is contrary to Laws or Regulations, Contractor shall bear all resulting costs and losses, and shall indemnify and hold harmless Owner and Engineer, and the officers, directors, members, partners, employees, agents, consultants, and subcontractors of each and any of them from and against all claims, costs, losses, and damages (including but not limited to all fees and charges of engineers, architects, attorneys, and other professionals and all court or arbitration or other dispute resolution costs) arising out of or relating to such Work or other action. It shall not be Contractor's responsibility to make certain that the Work described in the Contract Documents is in accordance with Laws and Regulations, but this shall not relieve Contractor of Contractor's obligations under Paragraph 3.03.

C. Owner or Contractor may give notice to the other party of any changes after the submission of Contractor's Bid (or after the date when Contractor became bound under a negotiated contract) in Laws or Regulations having an effect on the cost or time of performance of the Work, including but not limited to changes in Laws or Regulations having an effect on procuring permits and on sales, use, value-added, consumption, and other similar taxes. If Owner and Contractor are unable to agree on entitlement to or on the amount or extent, if any, of any adjustment in Contract Price or Contract Times resulting from such changes, then within 30 days of such notice Contractor may submit a Change Proposal, or Owner may initiate a Claim.

Copyright © 2013 National Society of Professional Engineers, American Council of Engineering Companies, and American Society of Civil Engineers. All rights reserved.

7.11 *Record Documents*

A. Contractor shall maintain in a safe place at the Site one printed record copy of all Drawings, Specifications, Addenda, Change Orders, Work Change Directives, Field Orders, written interpretations and clarifications, Manufacturers' Certification letter is documentation provided by the manufacturer, supplier, distributor, vendor, fabricator, etc. to various entities stating that the iron and steel products to be used in the project are produced in the United States in accordance with American Iron and Steel Requirements. Refer to Manufacturer's Certification Letter provided in these Contract Documents and approved Shop Drawings. Contractor shall keep such record documents in good order and annotate them to show changes made during construction. These record documents, together with all approved Samples, will be available to Engineer for reference. Upon completion of the Work, Contractor shall deliver these record documents to Engineer.

7.12 *Safety and Protection*

A. Contractor shall be solely responsible for initiating, maintaining, and supervising all safety precautions and programs in connection with the Work. Such responsibility does not relieve Subcontractors of their responsibility for the safety of persons or property in the performance of their work, nor for compliance with applicable safety Laws and Regulations. Contractor shall take all necessary precautions for the safety of, and shall provide the necessary protection to prevent damage, injury, or loss to:

1. all persons on the Site or who may be affected by the Work;

2. all the Work and materials and equipment to be incorporated therein, whether in storage on or off the Site; and

3. other property at the Site or adjacent thereto, including trees, shrubs, lawns, walks, pavements, roadways, structures, other work in progress, utilities, and Underground Facilities not designated for removal, relocation, or replacement in the course of construction.

B. Contractor shall comply with all applicable Laws and Regulations relating to the safety of persons or property, or to the protection of persons or property from damage, injury, or loss; and shall erect and maintain all necessary safeguards for such safety and protection. Contractor shall notify Owner; the owners of adjacent property, Underground Facilities, and other utilities; and other contractors and utility owners performing work at or adjacent to the Site, when prosecution of the Work may affect them, and shall cooperate with them in the protection, removal, relocation, and replacement of their property or work in progress.

C. Contractor shall comply with the applicable requirements of Owner's safety programs, if any. ~~The Supplementary Conditions identify any Owner's safety programs that are applicable to the Work.~~

D. Contractor shall inform Owner and Engineer of the specific requirements of Contractor's safety program with which Owner's and Engineer's employees and representatives must comply while at the Site.

E. All damage, injury, or loss to any property referred to in Paragraph 7.12.A.2 or 7.12.A.3 caused, directly or indirectly, in whole or in part, by Contractor, any Subcontractor, Supplier, or any other individual or entity directly or indirectly employed by any of them to perform any of the Work, or anyone for whose acts any of them may be liable, shall be remedied by Contractor at its expense (except damage or loss attributable to the fault of Drawings or Specifications or to the acts or omissions of Owner or Engineer or anyone employed by any of them, or anyone for whose acts any of them may be liable, and not attributable, directly

Copyright © 2013 National Society of Professional Engineers, American Council of Engineering Companies, and American Society of Civil Engineers. All rights reserved.

or indirectly, in whole or in part, to the fault or negligence of Contractor or any Subcontractor, Supplier, or other individual or entity directly or indirectly employed by any of them).

F. Contractor's duties and responsibilities for safety and protection shall continue until such time as all the Work is completed and Engineer has issued a notice to Owner and Contractor in accordance with Paragraph 15.06.B that the Work is acceptable (except as otherwise expressly provided in connection with Substantial Completion).

G. Contractor's duties and responsibilities for safety and protection shall resume whenever Contractor or any Subcontractor or Supplier returns to the Site to fulfill warranty or correction obligations, or to conduct other tasks arising from the Contract Documents.

7.13 *Safety Representative*

A. Contractor shall designate a qualified and experienced safety representative at the Site whose duties and responsibilities shall be the prevention of accidents and the maintaining and supervising of safety precautions and programs.

7.14 *Hazard Communication Programs*

A. Contractor shall be responsible for coordinating any exchange of material safety data sheets or other hazard communication information required to be made available to or exchanged between or among employers at the Site in accordance with Laws or Regulations.

7.15 *Emergencies*

A. In emergencies affecting the safety or protection of persons or the Work or property at the Site or adjacent thereto, Contractor is obligated to act to prevent threatened damage, injury, or loss. Contractor shall give Engineer prompt written notice if Contractor believes that any significant changes in the Work or variations from the Contract Documents have been caused thereby or are required as a result thereof. If Engineer determines that a change in the Contract Documents is required because of the action taken by Contractor in response to such an emergency, a Work Change Directive or Change Order will be issued.

7.16 *Shop Drawings, Samples, and Other Submittals*

A. *Shop Drawing and Sample Submittal Requirements*:

1. Before submitting a Shop Drawing or Sample, Contractor shall have:

a. reviewed and coordinated the Shop Drawing or Sample with other Shop Drawings and Samples and with the requirements of the Work and the Contract Documents;

b. determined and verified all field measurements, quantities, dimensions, specified performance and design criteria, installation requirements, materials, catalog numbers, and similar information with respect thereto;

c. determined and verified the suitability of all materials and equipment offered with respect to the indicated application, fabrication, shipping, handling, storage, assembly, and installation pertaining to the performance of the Work; and

d. determined and verified all information relative to Contractor's responsibilities for means, methods, techniques, sequences, and procedures of construction, and safety precautions and programs incident thereto.

~~d.~~e. obtained Manufacturer's Certification letter for any item in the submittal subject to American Iron and Steel requirements and include the Certificate in the

Copyright © 2013 National Society of Professional Engineers, American Council of Engineering Companies, and American Society of Civil Engineers. All rights reserved.

submittal. Refer to Manufacturer's Certification Letter provided in these Contract Documents

2. Each submittal shall bear a stamp or specific written certification that Contractor has satisfied Contractor's obligations under the Contract Documents with respect to Contractor's review of that submittal, and that Contractor approves the submittal.

3. With each submittal, Contractor shall give Engineer specific written notice of any variations that the Shop Drawing or Sample may have from the requirements of the Contract Documents. This notice shall be set forth in a written communication separate from the Shop Drawings or Sample submittal; and, in addition, in the case of Shop Drawings by a specific notation made on each Shop Drawing submitted to Engineer for review and approval of each such variation.

B. *Submittal Procedures for Shop Drawings and Samples*: Contractor shall submit Shop Drawings and Samples to Engineer for review and approval in accordance with the accepted Schedule of Submittals. Each submittal will be identified as Engineer may require.

1. *Shop Drawings*:

a. Contractor shall submit the number of copies required in the Specifications.

b. Data shown on the Shop Drawings will be complete with respect to quantities, dimensions, specified performance and design criteria, materials, and similar data to show Engineer the services, materials, and equipment Contractor proposes to provide and to enable Engineer to review the information for the limited purposes required by Paragraph 7.16.D.

2. *Samples*:

a. Contractor shall submit the number of Samples required in the Specifications.

b. Contractor shall clearly identify each Sample as to material, Supplier, pertinent data such as catalog numbers, the use for which intended and other data as Engineer may require to enable Engineer to review the submittal for the limited purposes required by Paragraph 7.16.D.

3. Where a Shop Drawing or Sample is required by the Contract Documents or the Schedule of Submittals, any related Work performed prior to Engineer's review and approval of the pertinent submittal will be at the sole expense and responsibility of Contractor.

C. *Other Submittals*: Contractor shall submit other submittals to Engineer in accordance with the accepted Schedule of Submittals, and pursuant to the applicable terms of the Specifications.

D. *Engineer's Review*:

1. Engineer will provide timely review of Shop Drawings and Samples in accordance with the Schedule of Submittals acceptable to Engineer. Engineer's review and approval will be only to determine if the items covered by the submittals will, after installation or incorporation in the Work, conform to the information given in the Contract Documents and be compatible with the design concept of the completed Project as a functioning whole as indicated by the Contract Documents.

2. Engineer's review and approval will not extend to means, methods, techniques, sequences, or procedures of construction or to safety precautions or programs incident thereto.

Copyright © 2013 National Society of Professional Engineers, American Council of Engineering Companies, and American Society of Civil Engineers. All rights reserved.

3. Engineer's review and approval of a separate item as such will not indicate approval of the assembly in which the item functions.

4. Engineer's review and approval of a Shop Drawing or Sample shall not relieve Contractor from responsibility for any variation from the requirements of the Contract Documents unless Contractor has complied with the requirements of Paragraph 7.16.A.3 and Engineer has given written approval of each such variation by specific written notation thereof incorporated in or accompanying the Shop Drawing or Sample. Engineer will document any such approved variation from the requirements of the Contract Documents in a Field Order.

5. Engineer's review and approval of a Shop Drawing or Sample shall not relieve Contractor from responsibility for complying with the requirements of Paragraph 7.16.A and B.

6. Engineer's review and approval of a Shop Drawing or Sample, or of a variation from the requirements of the Contract Documents, shall not, under any circumstances, change the Contract Times or Contract Price, unless such changes are included in a Change Order.

7. Neither Engineer's receipt, review, acceptance or approval of a Shop Drawing, Sample, or other submittal shall result in such item becoming a Contract Document.

8. Contractor shall perform the Work in compliance with the requirements and commitments set forth in approved Shop Drawings and Samples, subject to the provisions of Paragraph 7.16.D.4.

~~8.~~9. Engineer's review and approval of Shop Drawing or Sample shall include review of compliance with American Iron and Steel requirements, as applicable

E. *Resubmittal Procedures*:

1. Contractor shall make corrections required by Engineer and shall return the required number of corrected copies of Shop Drawings and submit, as required, new Samples for review and approval. Contractor shall direct specific attention in writing to revisions other than the corrections called for by Engineer on previous submittals.

2. Contractor shall furnish required submittals with sufficient information and accuracy to obtain required approval of an item with no more than three submittals. Engineer will record Engineer's time for reviewing a fourth or subsequent submittal of a Shop Drawings, sample, or other item requiring approval, and Contractor shall be responsible for Engineer's charges to Owner for such time. Owner may impose a set-off against payments due to Contractor to secure reimbursement for such charges.

3. If Contractor requests a change of a previously approved submittal item, Contractor shall be responsible for Engineer's charges to Owner for its review time, and Owner may impose a set-off against payments due to Contractor to secure reimbursement for such charges, unless the need for such change is beyond the control of Contractor.

7.17 *Contractor's General Warranty and Guarantee*

A. Contractor warrants and guarantees to Owner that all Work will be in accordance with the Contract Documents and will not be defective. Engineer and its officers, directors, members, partners, employees, agents, consultants, and subcontractors shall be entitled to rely on Contractor's warranty and guarantee.

Copyright © 2013 National Society of Professional Engineers, American Council of Engineering Companies, and American Society of Civil Engineers. All rights reserved.

B. Contractor's warranty and guarantee hereunder excludes defects or damage caused by:

1. abuse, modification, or improper maintenance or operation by persons other than Contractor, Subcontractors, Suppliers, or any other individual or entity for whom Contractor is responsible; or

2. normal wear and tear under normal usage.

C. Contractor's obligation to perform and complete the Work in accordance with the Contract Documents shall be absolute. None of the following will constitute an acceptance of Work that is not in accordance with the Contract Documents or a release of Contractor's obligation to perform the Work in accordance with the Contract Documents:

1. observations by Engineer;

2. recommendation by Engineer or payment by Owner of any progress or final payment;

3. the issuance of a certificate of Substantial Completion by Engineer or any payment related thereto by Owner;

4. use or occupancy of the Work or any part thereof by Owner;

5. any review and approval of a Shop Drawing or Sample submittal;

6. the issuance of a notice of acceptability by Engineer;

7. any inspection, test, or approval by others; or

8. any correction of defective Work by Owner.

D. If the Contract requires the Contractor to accept the assignment of a contract entered into by Owner, then the specific warranties, guarantees, and correction obligations contained in the assigned contract shall govern with respect to Contractor's performance obligations to Owner for the Work described in the assigned contract.

~~D.~~E. Contractor shall certify upon Substantial Completion that all Work and Materials has complied with American Iron and Steel requirements as mandated by Section 746 of Title VII of the Consolidated Appropriations Act of 2017 (Division A - Agriculture, Rural Development, Food and Drug Administration, and Related Agencies Appropriations Act, 2017) and subsequent statutes mandating domestic preference. Contractor shall provide said Certification to Owner. Refer to General Contractor's Certification Letter provided in these Contract Documents.

7.18 *Indemnification*

A. To the fullest extent permitted by Laws and Regulations, and in addition to any other obligations of Contractor under the Contract or otherwise, Contractor shall indemnify and hold harmless Owner and Engineer, and the officers, directors, members, partners, employees, agents, consultants and subcontractors of each and any of them from and against all claims, costs, losses, and damages (including but not limited to all fees and charges of engineers, architects, attorneys, and other professionals and all court or arbitration or other dispute resolution costs) arising out of or relating to the performance of the Work, provided that any such claim, cost, loss, or damage is attributable to bodily injury, sickness, disease, or death, or to injury to or destruction of tangible property (other than the Work itself), including the loss of use resulting therefrom but only to the extent caused by any negligent act or omission of Contractor, any Subcontractor, any Supplier, or any individual or entity directly or indirectly employed by any of them to perform any of the Work or anyone for whose acts any of them may be liable.

Copyright © 2013 National Society of Professional Engineers, American Council of Engineering Companies, and American Society of Civil Engineers. All rights reserved.

B. In any and all claims against Owner or Engineer or any of their officers, directors, members, partners, employees, agents, consultants, or subcontractors by any employee (or the survivor or personal representative of such employee) of Contractor, any Subcontractor, any Supplier, or any individual or entity directly or indirectly employed by any of them to perform any of the Work, or anyone for whose acts any of them may be liable, the indemnification obligation under Paragraph 7.18.A shall not be limited in any way by any limitation on the amount or type of damages, compensation, or benefits payable by or for Contractor or any such Subcontractor, Supplier, or other individual or entity under workers' compensation acts, disability benefit acts, or other employee benefit acts.

C. The indemnification obligations of Contractor under Paragraph 7.18.A shall not extend to the liability of Engineer and Engineer's officers, directors, members, partners, employees, agents, consultants and subcontractors arising out of:

1. the preparation or approval of, or the failure to prepare or approve maps, Drawings, opinions, reports, surveys, Change Orders, designs, or Specifications; or

2. giving directions or instructions, or failing to give them, if that is the primary cause of the injury or damage.

7.19 *Delegation of Professional Design Services*

A. Contractor will not be required to provide professional design services unless such services are specifically required by the Contract Documents for a portion of the Work or unless such services are required to carry out Contractor's responsibilities for construction means, methods, techniques, sequences and procedures. Contractor shall not be required to provide professional services in violation of applicable Laws and Regulations.

B. If professional design services or certifications by a design professional related to systems, materials, or equipment are specifically required of Contractor by the Contract Documents, Owner and Engineer will specify all performance and design criteria that such services must satisfy. Contractor shall cause such services or certifications to be provided by a properly licensed professional, whose signature and seal shall appear on all drawings, calculations, specifications, certifications, and other submittals prepared by such professional. Shop Drawings and other submittals related to the Work designed or certified by such professional, if prepared by others, shall bear such professional's written approval when submitted to Engineer.

C. Owner and Engineer shall be entitled to rely upon the adequacy, accuracy, and completeness of the services, certifications, or approvals performed by such design professionals, provided Owner and Engineer have specified to Contractor all performance and design criteria that such services must satisfy.

D. Pursuant to this paragraph, Engineer's review and approval of design calculations and design drawings will be only for the limited purpose of checking for conformance with performance and design criteria given and the design concept expressed in the Contract Documents. Engineer's review and approval of Shop Drawings and other submittals (except design calculations and design drawings) will be only for the purpose stated in Paragraph 7.16.D.1.

E. Contractor shall not be responsible for the adequacy of the performance or design criteria specified by Owner or Engineer.

Copyright © 2013 National Society of Professional Engineers, American Council of Engineering Companies, and American Society of Civil Engineers. All rights reserved.

ARTICLE 8 – OTHER WORK AT THE SITE

8.01 *Other Work*

A. In addition to and apart from the Work under the Contract Documents, the Owner may perform other work at or adjacent to the Site. Such other work may be performed by Owner's employees, or through contracts between the Owner and third parties. Owner may also arrange to have third-party utility owners perform work on their utilities and facilities at or adjacent to the Site.

B. If Owner performs other work at or adjacent to the Site with Owner's employees, or through contracts for such other work, then Owner shall give Contractor written notice thereof prior to starting any such other work. If Owner has advance information regarding the start of any utility work at or adjacent to the Site, Owner shall provide such information to Contractor.

C. Contractor shall afford each other contractor that performs such other work, each utility owner performing other work, and Owner, if Owner is performing other work with Owner's employees, proper and safe access to the Site, and provide a reasonable opportunity for the introduction and storage of materials and equipment and the execution of such other work. Contractor shall do all cutting, fitting, and patching of the Work that may be required to properly connect or otherwise make its several parts come together and properly integrate with such other work. Contractor shall not endanger any work of others by cutting, excavating, or otherwise altering such work; provided, however, that Contractor may cut or alter others' work with the written consent of Engineer and the others whose work will be affected.

D. If the proper execution or results of any part of Contractor's Work depends upon work performed by others under this Article 8, Contractor shall inspect such other work and promptly report to Engineer in writing any delays, defects, or deficiencies in such other work that render it unavailable or unsuitable for the proper execution and results of Contractor's Work. Contractor's failure to so report will constitute an acceptance of such other work as fit and proper for integration with Contractor's Work except for latent defects and deficiencies in such other work.

8.02 *Coordination*

A. If Owner intends to contract with others for the performance of other work at or adjacent to the Site, to perform other work at or adjacent to the Site with Owner's employees, or to arrange to have utility owners perform work at or adjacent to the Site, the following will be ~~set forth in the Supplementary Conditions or~~ provided to Contractor prior to the start of any such other work:

1. the identity of the individual or entity that will have authority and responsibility for coordination of the activities among the various contractors;

2. an itemization of the specific matters to be covered by such authority and responsibility; and

3. the extent of such authority and responsibilities.

B. ~~Unless otherwise provided in the Supplementary Conditions,~~ Owner shall have sole authority and responsibility for such coordination.

8.03 *Legal Relationships*

A. If, in the course of performing other work at or adjacent to the Site for Owner, the Owner's employees, any other contractor working for Owner, or any utility owner causes damage to

Copyright © 2013 National Society of Professional Engineers, American Council of Engineering Companies, and American Society of Civil Engineers. All rights reserved.

the Work or to the property of Contractor or its Subcontractors, or delays, disrupts, interferes with, or increases the scope or cost of the performance of the Work, through actions or inaction, then Contractor shall be entitled to an equitable adjustment in the Contract Price or the Contract Times, or both. Contractor must submit any Change Proposal seeking an equitable adjustment in the Contract Price or the Contract Times under this paragraph within 30 days of the damaging, delaying, disrupting, or interfering event. The entitlement to, and extent of, any such equitable adjustment shall take into account information (if any) regarding such other work that was provided to Contractor in the Contract Documents prior to the submittal of the Bid or the final negotiation of the terms of the Contract. When applicable, any such equitable adjustment in Contract Price shall be conditioned on Contractor assigning to Owner all Contractor's rights against such other contractor or utility owner with respect to the damage, delay, disruption, or interference that is the subject of the adjustment. Contractor's entitlement to an adjustment of the Contract Times is conditioned on such adjustment being essential to Contractor's ability to complete the Work within the Contract Times.

B. Contractor shall take reasonable and customary measures to avoid damaging, delaying, disrupting, or interfering with the work of Owner, any other contractor, or any utility owner performing other work at or adjacent to the Site. If Contractor fails to take such measures and as a result damages, delays, disrupts, or interferes with the work of any such other contractor or utility owner, then Owner may impose a set-off against payments due to Contractor, and assign to such other contractor or utility owner the Owner's contractual rights against Contractor with respect to the breach of the obligations set forth in this paragraph.

C. When Owner is performing other work at or adjacent to the Site with Owner's employees, Contractor shall be liable to Owner for damage to such other work, and for the reasonable direct delay, disruption, and interference costs incurred by Owner as a result of Contractor's failure to take reasonable and customary measures with respect to Owner's other work. In response to such damage, delay, disruption, or interference, Owner may impose a set-off against payments due to Contractor.

D. If Contractor damages, delays, disrupts, or interferes with the work of any other contractor, or any utility owner performing other work at or adjacent to the Site, through Contractor's failure to take reasonable and customary measures to avoid such impacts, or if any claim arising out of Contractor's actions, inactions, or negligence in performance of the Work at or adjacent to the Site is made by any such other contractor or utility owner against Contractor, Owner, or Engineer, then Contractor shall (1) promptly attempt to settle the claim as to all parties through negotiations with such other contractor or utility owner, or otherwise resolve the claim by arbitration or other dispute resolution proceeding or at law, and (2) indemnify and hold harmless Owner and Engineer, and the officers, directors, members, partners, employees, agents, consultants and subcontractors of each and any of them from and against any such claims, and against all costs, losses, and damages (including but not limited to all fees and charges of engineers, architects, attorneys, and other professionals and all court or arbitration or other dispute resolution costs) arising out of or relating to such damage, delay, disruption, or interference.

ARTICLE 9 – OWNER'S RESPONSIBILITIES

9.01 *Communications to Contractor*

A. Except as otherwise provided in these General Conditions, Owner shall issue all communications to Contractor through Engineer.

Copyright © 2013 National Society of Professional Engineers, American Council of Engineering Companies, and American Society of Civil Engineers. All rights reserved.

9.02 *Replacement of Engineer*

A. Owner may at its discretion appoint an engineer to replace Engineer, provided Contractor makes no reasonable objection to the replacement engineer. The replacement engineer's status under the Contract Documents shall be that of the former Engineer.

9.03 *Furnish Data*

A. Owner shall promptly furnish the data required of Owner under the Contract Documents.

9.04 *Pay When Due*

A. Owner shall make payments to Contractor when they are due as provided in the Agreement.

9.05 *Lands and Easements; Reports, Tests, and Drawings*

A. Owner's duties with respect to providing lands and easements are set forth in Paragraph 5.01.

B. Owner's duties with respect to providing engineering surveys to establish reference points are set forth in Paragraph 4.03.

C. Article 5 refers to Owner's identifying and making available to Contractor copies of reports of explorations and tests of conditions at the Site, and drawings of physical conditions relating to existing surface or subsurface structures at the Site.

9.06 *Insurance*

A. Owner's responsibilities, if any, with respect to purchasing and maintaining liability and property insurance are set forth in Article 6.

9.07 *Change Orders*

A. Owner's responsibilities with respect to Change Orders are set forth in Article 11.

9.08 *Inspections, Tests, and Approvals*

A. Owner's responsibility with respect to certain inspections, tests, and approvals is set forth in Paragraph 14.02.B.

9.09 *Limitations on Owner's Responsibilities*

A. The Owner shall not supervise, direct, or have control or authority over, nor be responsible for, Contractor's means, methods, techniques, sequences, or procedures of construction, or the safety precautions and programs incident thereto, or for any failure of Contractor to comply with Laws and Regulations applicable to the performance of the Work. Owner will not be responsible for Contractor's failure to perform the Work in accordance with the Contract Documents.

9.10 *Undisclosed Hazardous Environmental Condition*

A. Owner's responsibility in respect to an undisclosed Hazardous Environmental Condition is set forth in Paragraph 5.06.

9.11 *Evidence of Financial Arrangements*

A. Upon request of Contractor, Owner shall furnish Contractor reasonable evidence that financial arrangements have been made to satisfy Owner's obligations under the Contract Documents (including obligations under proposed changes in the Work).

Copyright © 2013 National Society of Professional Engineers, American Council of Engineering Companies, and American Society of Civil Engineers. All rights reserved.

9.12 *Safety Programs*

A. While at the Site, Owner's employees and representatives shall comply with the specific applicable requirements of Contractor's safety programs of which Owner has been informed.

B. Owner shall furnish copies of any applicable Owner safety programs to Contractor.

ARTICLE 10 – ENGINEER'S STATUS DURING CONSTRUCTION

10.01 *Owner's Representative*

A. Engineer will be Owner's representative during the construction period. The duties and responsibilities and the limitations of authority of Engineer as Owner's representative during construction are set forth in the Contract.

10.02 *Visits to Site*

A. Engineer will make visits to the Site at intervals appropriate to the various stages of construction as Engineer deems necessary in order to observe as an experienced and qualified design professional the progress that has been made and the quality of the various aspects of Contractor's executed Work. Based on information obtained during such visits and observations, Engineer, for the benefit of Owner, will determine, in general, if the Work is proceeding in accordance with the Contract Documents. Engineer will not be required to make exhaustive or continuous inspections on the Site to check the quality or quantity of the Work. Engineer's efforts will be directed toward providing for Owner a greater degree of confidence that the completed Work will conform generally to the Contract Documents. On the basis of such visits and observations, Engineer will keep Owner informed of the progress of the Work and will endeavor to guard Owner against defective Work.

B. Engineer's visits and observations are subject to all the limitations on Engineer's authority and responsibility set forth in Paragraph 10.08. Particularly, but without limitation, during or as a result of Engineer's visits or observations of Contractor's Work, Engineer will not supervise, direct, control, or have authority over or be responsible for Contractor's means, methods, techniques, sequences, or procedures of construction, or the safety precautions and programs incident thereto, or for any failure of Contractor to comply with Laws and Regulations applicable to the performance of the Work.

10.03 *Project Representative*

A. If Owner and Engineer have agreed that Engineer will furnish a Resident Project Representative to represent Engineer at the Site and assist Engineer in observing the progress and quality of the Work, then the authority and responsibilities of any such Resident Project Representative will be as provided ~~in the Supplementary Conditions~~, and limitations on the responsibilities thereof will be as provided in Paragraph 10.08. If Owner designates another representative or agent to represent Owner at the Site who is not Engineer's consultant, agent, or employee, the responsibilities and authority and limitations thereon of such other individual or entity will be as provided ~~in the Supplementary Conditions~~.

B. The Resident Project Representative (RPR) will be Engineer's representative at the Site, will act as directed by and under the supervision of Engineer, and will confer with Engineer regarding RPR's actions.

1. General: RPR's dealings in matters pertaining to the Work in general shall be with Engineer and Contractor. RPR's dealings with Subcontractors shall only be through or with the full knowledge and approval of Contractor. RPR shall generally communicate with Owner only with the knowledge of and under the direction of Engineer.

Copyright © 2013 National Society of Professional Engineers, American Council of Engineering Companies, and American Society of Civil Engineers. All rights reserved.

2. Schedules: Review the progress schedule, schedule of Shop Drawing and Sample submittals, and Schedule of Values prepared by Contractor and consult with Engineer concerning acceptability.

3. Conferences and Meetings: Attend meetings with Contractor, such as preconstruction conferences, progress meetings, job conferences, and other Project-related meetings, and prepare and circulate copies of minutes thereof.

4. Liaison:

    a. Serve as Engineer's liaison with Contractor. Working principally through Contractor's authorized representative or designee, assist in providing information regarding the provisions and intent of the Contract Documents.

    b. Assist Engineer in serving as Owner's liaison with Contractor when Contractor's operations affect Owner's on-Site operations.

    c. Assist in obtaining from Owner additional details or information, when required for proper execution of the Work.

5. Interpretation of Contract Documents: Report to Engineer when clarifications and interpretations of the Contract Documents are needed and transmit to Contractor clarifications and interpretations as issued by Engineer.

6. Shop Drawings and Samples:

    a. Record date of receipt of Samples and Contractor-approved Shop Drawings.

    b. Receive Samples which are furnished at the Site by Contractor and notify Engineer of availability of Samples for examination.

    c. Advise Engineer and Contractor of the commencement of any portion of the Work requiring a Shop Drawing or Sample submittal for which RPR believes that the submittal has not been approved by Engineer.

7. Modifications: Consider and evaluate Contractor's suggestions for modifications in Drawings or Specifications and report such suggestions, together with RPR's recommendations, if any, to Engineer. Transmit to Contractor in writing decisions as issued by Engineer.

8. Review of Work and Rejection of Defective Work:

    a. Conduct on-Site observations of Contractor's work in progress to assist Engineer in determining if the Work is in general proceeding in accordance with the Contract Documents.

    b. Report to Engineer whenever RPR believes that any part of Contractor's work in progress is defective, will not produce a completed Project that conforms generally to the Contract Documents, or will imperil the integrity of the design concept of the completed Project as a functioning whole as indicated in the Contract Documents, or has been damaged, or does not meet the requirements of any inspection, test or approval required to be made; and advise Engineer of that part of work in progress that RPR believes should be corrected or rejected or should be uncovered for observation, or requires special testing, inspection or approval.

9. Inspections, Tests, and System Start-ups:

Copyright © 2013 National Society of Professional Engineers, American Council of Engineering Companies, and American Society of Civil Engineers. All rights reserved.

a. Verify that tests, equipment, and systems start-ups and operating and maintenance training are conducted in the presence of appropriate Owner's personnel, and that Contractor maintains adequate records thereof.

b. Observe, record, and report to Engineer appropriate details relative to the test procedures and systems start-ups.

10. Records:

a. Prepare a daily report or keep a diary or log book, recording Contractor's hours on the Site, Subcontractors present at the Site, weather conditions, data relative to questions of Change Orders, Field Orders, Work Change Directives, or changed conditions, Site visitors, deliveries of equipment or materials, daily activities, decisions, observations in general, and specific observations in more detail as in the case of observing test procedures; and send copies to Engineer.

b. Record names, addresses, fax numbers, e-mail addresses, web site locations, and telephone numbers of all Contractors, Subcontractors, and major Suppliers of materials and equipment.

c. Maintain records for use in preparing Project documentation.

11. Reports:

a. Furnish to Engineer periodic reports as required of progress of the Work and of Contractor's compliance with the Progress Schedule and schedule of Shop Drawing and Sample submittals.

b. Draft and recommend to Engineer proposed Change Orders, Work Change Directives, and Field Orders. Obtain backup material from Contractor.

c. Immediately notify Engineer of the occurrence of any Site accidents, emergencies, acts of God endangering the Work, force majeure or delay events, damage to property by fire or other causes, or the discovery of any Constituent of Concern or Hazardous Environmental Condition.

12. Payment Requests: Review applications for payment with Contractor for compliance with the established procedure for their submission and forward with recommendations to Engineer, noting particularly the relationship of the payment requested to the Schedule of Values, Work completed, and materials and equipment delivered at the Site but not incorporated in the Work.

13. Certificates, Operation and Maintenance Manuals: During the course of the Work, verify that materials and equipment certificates, operation and maintenance manuals and other data required by the Contract Documents to be assembled and furnished by Contractor are applicable to the items actually installed and in accordance with the Contract Documents, and have these documents delivered to Engineer for review and forwarding to Owner prior to payment for that part of the Work.

14. Completion:

a. Participate in Engineer's visits to the Site to determine Substantial Completion, assist in the determination of Substantial Completion and the preparation of a punch list of items to be completed or corrected.

b. Participate in Engineer's final visit to the Site to determine completion of the Work, in the company of Owner and Contractor, and prepare a final punch list of items to be completed and deficiencies to be remedied.

Copyright © 2013 National Society of Professional Engineers, American Council of Engineering Companies, and American Society of Civil Engineers. All rights reserved.

c. Observe whether all items on the final list have been completed or corrected and make recommendations to Engineer concerning acceptance and issuance of the notice of acceptability of the work.

C. The RPR shall not:

1. Authorize any deviation from the Contract Documents or substitution of materials or equipment (including "or-equal" items).

2. Exceed limitations of Engineer's authority as set forth in the Contract Documents.

3. Undertake any of the responsibilities of Contractor, Subcontractors, or Suppliers.

4. Advise on, issue directions relative to, or assume control over any aspect of the means, methods, techniques, sequences or procedures of Contractor's work.

5. Advise on, issue directions regarding, or assume control over security or safety practices, precautions, and programs in connection with the activities or operations of Owner or Contractor.

6. Participate in specialized field or laboratory tests or inspections conducted off-site by others except as specifically authorized by Engineer.

7. Accept Shop Drawing or Sample submittals from anyone other than Contractor.

~~1.~~8. Authorize Owner to occupy the Project in whole or in part.

10.04 *Rejecting Defective Work*

A. Engineer has the authority to reject Work in accordance with Article 14.

10.05 *Shop Drawings, Change Orders and Payments*

A. Engineer's authority, and limitations thereof, as to Shop Drawings and Samples, are set forth in Paragraph 7.16.

B. Engineer's authority, and limitations thereof, as to design calculations and design drawings submitted in response to a delegation of professional design services, if any, are set forth in Paragraph 7.19.

C. Engineer's authority as to Change Orders is set forth in Article 11.

D. Engineer's authority as to Applications for Payment is set forth in Article 15.

10.06 *Determinations for Unit Price Work*

A. Engineer will determine the actual quantities and classifications of Unit Price Work performed by Contractor as set forth in Paragraph 13.03.

10.07 *Decisions on Requirements of Contract Documents and Acceptability of Work*

A. Engineer will render decisions regarding the requirements of the Contract Documents, and judge the acceptability of the Work, pursuant to the specific procedures set forth herein for initial interpretations, Change Proposals, and acceptance of the Work. In rendering such decisions and judgments, Engineer will not show partiality to Owner or Contractor, and will not be liable to Owner, Contractor, or others in connection with any proceedings, interpretations, decisions, or judgments conducted or rendered in good faith.

10.08 *Limitations on Engineer's Authority and Responsibilities*

A. Neither Engineer's authority or responsibility under this Article 10 or under any other provision of the Contract, nor any decision made by Engineer in good faith either to exercise

Copyright © 2013 National Society of Professional Engineers, American Council of Engineering Companies, and American Society of Civil Engineers. All rights reserved.

or not exercise such authority or responsibility or the undertaking, exercise, or performance of any authority or responsibility by Engineer, shall create, impose, or give rise to any duty in contract, tort, or otherwise owed by Engineer to Contractor, any Subcontractor, any Supplier, any other individual or entity, or to any surety for or employee or agent of any of them.

B. Engineer will not supervise, direct, control, or have authority over or be responsible for Contractor's means, methods, techniques, sequences, or procedures of construction, or the safety precautions and programs incident thereto, or for any failure of Contractor to comply with Laws and Regulations applicable to the performance of the Work. Engineer will not be responsible for Contractor's failure to perform the Work in accordance with the Contract Documents.

C. Engineer will not be responsible for the acts or omissions of Contractor or of any Subcontractor, any Supplier, or of any other individual or entity performing any of the Work.

D. Engineer's review of the final Application for Payment and accompanying documentation and all maintenance and operating instructions, schedules, guarantees, bonds, certificates of inspection, tests and approvals, and other documentation required to be delivered by Paragraph 15.06.A will only be to determine generally that their content complies with the requirements of, and in the case of certificates of inspections, tests, and approvals, that the results certified indicate compliance with the Contract Documents.

E. The limitations upon authority and responsibility set forth in this Paragraph 10.08 shall also apply to the Resident Project Representative, if any.

10.09 *Compliance with Safety Program*

A. While at the Site, Engineer's employees and representatives will comply with the specific applicable requirements of Owner's and Contractor's safety programs (if any) of which Engineer has been informed.

10.10 *American Iron & Steel*

A. Services required to determine and certify that to the best of the Engineer's knowledge and belief all iron and steel products referenced in engineering analysis, the Plans, Specifications, Bidding Documents, and associated Bid Addenda requiring design revisions are either produced in the United States or are the subject of an approved waiver and services required to determine to the best of the engineer's knowledge and belief that approved substitutes, equals, and all iron and steel products proposed in the shop drawings, Change Orders and Partial Payment Estimates are either produced in the United States or are the subject of an approved waiver under Section 746 of Title VII of the Consolidated Appropriations Act of 2017 (Division A - Agriculture, Rural Development, Food and Drug Administration, and Related Agencies Appropriations Act, 2017).

ARTICLE 11 – AMENDING THE CONTRACT DOCUMENTS; CHANGES IN THE WORK

11.01 *Amending and Supplementing Contract Documents*

A. The Contract Documents may be amended or supplemented by a Change Order, a Work Change Directive, or a Field Order.

1. *Change Orders*:

a. If an amendment or supplement to the Contract Documents includes a change in the Contract Price or the Contract Times, such amendment or supplement must be set forth in a Change Order. A Change Order also may be used to establish

Copyright © 2013 National Society of Professional Engineers, American Council of Engineering Companies, and American Society of Civil Engineers. All rights reserved.

amendments and supplements of the Contract Documents that do not affect the Contract Price or Contract Times.

b. Owner and Contractor may amend those terms and conditions of the Contract Documents that do not involve (1) the performance or acceptability of the Work, (2) the design (as set forth in the Drawings, Specifications, or otherwise), or (3) other engineering or technical matters, without the recommendation of the Engineer. Such an amendment shall be set forth in a Change Order.

2. *Work Change Directives*: A Work Change Directive will not change the Contract Price or the Contract Times but is evidence that the parties expect that the modification ordered or documented by a Work Change Directive will be incorporated in a subsequently issued Change Order, following negotiations by the parties as to the Work Change Directive's effect, if any, on the Contract Price and Contract Times; or, if negotiations are unsuccessful, by a determination under the terms of the Contract Documents governing adjustments, expressly including Paragraph 11.04 regarding change of Contract Price. Contractor must submit any Change Proposal seeking an adjustment of the Contract Price or the Contract Times, or both, no later than 30 days after the completion of the Work set out in the Work Change Directive. Owner must submit any Claim seeking an adjustment of the Contract Price or the Contract Times, or both, no later than 60 days after issuance of the Work Change Directive.

3. *Field Orders*: Engineer may authorize minor changes in the Work if the changes do not involve an adjustment in the Contract Price or the Contract Times and are compatible with the design concept of the completed Project as a functioning whole as indicated by the Contract Documents. Such changes will be accomplished by a Field Order and will be binding on Owner and also on Contractor, which shall perform the Work involved promptly. If Contractor believes that a Field Order justifies an adjustment in the Contract Price or Contract Times, or both, then before proceeding with the Work at issue, Contractor shall submit a Change Proposal as provided herein.

11.02 *Owner-Authorized Changes in the Work*

A. Without invalidating the Contract and without notice to any surety, Owner may, at any time or from time to time, order additions, deletions, or revisions in the Work. Such changes shall be supported by Engineer's recommendation, to the extent the change involves the design (as set forth in the Drawings, Specifications, or otherwise), or other engineering or technical matters. Such changes may be accomplished by a Change Order, if Owner and Contractor have agreed as to the effect, if any, of the changes on Contract Times or Contract Price; or by a Work Change Directive. Upon receipt of any such document, Contractor shall promptly proceed with the Work involved; or, in the case of a deletion in the Work, promptly cease construction activities with respect to such deleted Work. Added or revised Work shall be performed under the applicable conditions of the Contract Documents. Nothing in this paragraph shall obligate Contractor to undertake work that Contractor reasonably concludes cannot be performed in a manner consistent with Contractor's safety obligations under the Contract Documents or Laws and Regulations.

11.03 *Unauthorized Changes in the Work*

A. Contractor shall not be entitled to an increase in the Contract Price or an extension of the Contract Times with respect to any work performed that is not required by the Contract Documents, as amended, modified, or supplemented, except in the case of an emergency as provided in Paragraph 7.15 or in the case of uncovering Work as provided in Paragraph 14.05.

Copyright © 2013 National Society of Professional Engineers, American Council of Engineering Companies, and American Society of Civil Engineers. All rights reserved.

11.04 *Change of Contract Price*

A. The Contract Price may only be changed by a Change Order. Any Change Proposal for an adjustment in the Contract Price shall comply with the provisions of Paragraph 11.06. Any Claim for an adjustment of Contract Price shall comply with the provisions of Article 12.

B. An adjustment in the Contract Price will be determined as follows:

1. where the Work involved is covered by unit prices contained in the Contract Documents, then by application of such unit prices to the quantities of the items involved (subject to the provisions of Paragraph 13.03); or

2. where the Work involved is not covered by unit prices contained in the Contract Documents, then by a mutually agreed lump sum (which may include an allowance for overhead and profit not necessarily in accordance with Paragraph 11.04.C.2); or

3. where the Work involved is not covered by unit prices contained in the Contract Documents and the parties do not reach mutual agreement to a lump sum, then on the basis of the Cost of the Work (determined as provided in Paragraph 13.01) plus a Contractor's fee for overhead and profit (determined as provided in Paragraph 11.04.C).

C. *Contractor's Fee*: When applicable, the Contractor's fee for overhead and profit shall be determined as follows:

1. a mutually acceptable fixed fee; or

2. if a fixed fee is not agreed upon, then a fee based on the following percentages of the various portions of the Cost of the Work:

a. for costs incurred under Paragraphs 13.01.B.1 and 13.01.B.2, the Contractor's fee shall be 15 percent;

b. for costs incurred under Paragraph 13.01.B.3, the Contractor's fee shall be five percent;

c. where one or more tiers of subcontracts are on the basis of Cost of the Work plus a fee and no fixed fee is agreed upon, the intent of Paragraphs 11.01.C.2.a and 11.01.C.2.b is that the Contractor's fee shall be based on: (1) a fee of 15 percent of the costs incurred under Paragraphs 13.01.A.1 and 13.01.A.2 by the Subcontractor that actually performs the Work, at whatever tier, and (2) with respect to Contractor itself and to any Subcontractors of a tier higher than that of the Subcontractor that actually performs the Work, a fee of five percent of the amount (fee plus underlying costs incurred) attributable to the next lower tier Subcontractor; provided, however, that for any such subcontracted work the maximum total fee to be paid by Owner shall be no greater than 27 percent of the costs incurred by the Subcontractor that actually performs the work;

d. no fee shall be payable on the basis of costs itemized under Paragraphs 13.01.B.4, 13.01.B.5, and 13.01.C;

e. the amount of credit to be allowed by Contractor to Owner for any change which results in a net decrease in cost will be the amount of the actual net decrease in cost plus a deduction in Contractor's fee by an amount equal to five percent of such net decrease; and

f. when both additions and credits are involved in any one change, the adjustment in Contractor's fee shall be computed on the basis of the net change in accordance with Paragraphs 11.04.C.2.a through 11.04.C.2.e, inclusive.

Copyright © 2013 National Society of Professional Engineers, American Council of Engineering Companies, and American Society of Civil Engineers. All rights reserved.

11.05 *Change of Contract Times*

A. The Contract Times may only be changed by a Change Order. Any Change Proposal for an adjustment in the Contract Times shall comply with the provisions of Paragraph 11.06. Any Claim for an adjustment in the Contract Times shall comply with the provisions of Article 12.

B. An adjustment of the Contract Times shall be subject to the limitations set forth in Paragraph 4.05, concerning delays in Contractor's progress.

~~B.~~C. The Contractor shall be responsible for the cost of any additional expenses occurred by the Owner as a result of the time extension, including but not limited to Engineering Services, Resident Project Representative, Owner's Representative, Legal, Administrative, any other costs incurred, etc.

11.06 *Change Proposals*

A. Contractor shall submit a Change Proposal to Engineer to request an adjustment in the Contract Times or Contract Price; appeal an initial decision by Engineer concerning the requirements of the Contract Documents or relating to the acceptability of the Work under the Contract Documents; contest a set-off against payment due; or seek other relief under the Contract. The Change Proposal shall specify any proposed change in Contract Times or Contract Price, or both, or other proposed relief, and explain the reason for the proposed change, with citations to any governing or applicable provisions of the Contract Documents.

1. *Procedures*: Contractor shall submit each Change Proposal to Engineer promptly (but in no event later than 30 days) after the start of the event giving rise thereto, or after such initial decision. The Contractor shall submit supporting data, including the proposed change in Contract Price or Contract Time (if any), to the Engineer and Owner within 15 days after the submittal of the Change Proposal. Include supporting data (name of manufacturer, city and state where the product was manufactured, description of product, signature of authorized manufacturer's representative) in the Manufacturer's Certification Letter, as applicable. The supporting data shall be accompanied by a written statement that the supporting data are accurate and complete, and that any requested time or price adjustment is the entire adjustment to which Contractor believes it is entitled as a result of said event. Engineer will advise Owner regarding the Change Proposal, and consider any comments or response from Owner regarding the Change Proposal.

2. *Engineer's Action*: Engineer will review each Change Proposal and, within 30 days after receipt of the Contractor's supporting data, either deny the Change Proposal in whole, approve it in whole, or deny it in part and approve it in part. Such actions shall be in writing, with a copy provided to Owner and Contractor. If Engineer does not take action on the Change Proposal within 30 days, then either Owner or Contractor may at any time thereafter submit a letter to the other party indicating that as a result of Engineer's inaction the Change Proposal is deemed denied, thereby commencing the time for appeal of the denial under Article 12.

3. *Binding Decision*: Engineer's decision will be final and binding upon Owner and Contractor, unless Owner or Contractor appeals the decision by filing a Claim under Article 12.

B. *Resolution of Certain Change Proposals*: If the Change Proposal does not involve the design (as set forth in the Drawings, Specifications, or otherwise), the acceptability of the Work, or other engineering or technical matters, then Engineer will notify the parties that the Engineer is unable to resolve the Change Proposal. For purposes of further resolution of such a Change

Copyright © 2013 National Society of Professional Engineers, American Council of Engineering Companies, and American Society of Civil Engineers. All rights reserved.

Proposal, such notice shall be deemed a denial, and Contractor may choose to seek resolution under the terms of Article 12.

11.07 *Execution of Change Orders*

A. Owner and Contractor shall execute appropriate Change Orders covering:

1. changes in the Contract Price or Contract Times which are agreed to by the parties, including any undisputed sum or amount of time for Work actually performed in accordance with a Work Change Directive;

2. changes in Contract Price resulting from an Owner set-off, unless Contractor has duly contested such set-off;

3. changes in the Work which are: (a) ordered by Owner pursuant to Paragraph 11.02, (b) required because of Owner's acceptance of defective Work under Paragraph 14.04 or Owner's correction of defective Work under Paragraph 14.07, or (c) agreed to by the parties, subject to the need for Engineer's recommendation if the change in the Work involves the design (as set forth in the Drawings, Specifications, or otherwise), or other engineering or technical matters; and

4. changes in the Contract Price or Contract Times, or other changes, which embody the substance of any final and binding results under Paragraph 11.06, or Article 12.

B. If Owner or Contractor refuses to execute a Change Order that is required to be executed under the terms of this Paragraph 11.07, it shall be deemed to be of full force and effect, as if fully executed.

C. All Contract Change Orders must be concurred in by Agency before they are effective.

11.08 *Notification to Surety*

A. If the provisions of any bond require notice to be given to a surety of any change affecting the general scope of the Work or the provisions of the Contract Documents (including, but not limited to, Contract Price or Contract Times), the giving of any such notice will be Contractor's responsibility. The amount of each applicable bond will be adjusted to reflect the effect of any such change.

ARTICLE 12 – CLAIMS

12.01 *Claims*

A. *Claims Process*: The following disputes between Owner and Contractor shall be submitted to the Claims process set forth in this Article:

1. Appeals by Owner or Contractor of Engineer's decisions regarding Change Proposals;

2. Owner demands for adjustments in the Contract Price or Contract Times, or other relief under the Contract Documents; and

3. Disputes that Engineer has been unable to address because they do not involve the design (as set forth in the Drawings, Specifications, or otherwise), the acceptability of the Work, or other engineering or technical matters.

B. *Submittal of Claim*: The party submitting a Claim shall deliver it directly to the other party to the Contract promptly (but in no event later than 30 days) after the start of the event giving rise thereto; in the case of appeals regarding Change Proposals within 30 days of the decision under appeal. The party submitting the Claim shall also furnish a copy to the Engineer, for its information only. The responsibility to substantiate a Claim shall rest with the party making

Copyright © 2013 National Society of Professional Engineers, American Council of Engineering Companies, and American Society of Civil Engineers. All rights reserved.

the Claim. In the case of a Claim by Contractor seeking an increase in the Contract Times or Contract Price, or both, Contractor shall certify that the Claim is made in good faith, that the supporting data are accurate and complete, and that to the best of Contractor's knowledge and belief the amount of time or money requested accurately reflects the full amount to which Contractor is entitled.

C. *Review and Resolution*: The party receiving a Claim shall review it thoroughly, giving full consideration to its merits. The two parties shall seek to resolve the Claim through the exchange of information and direct negotiations. The parties may extend the time for resolving the Claim by mutual agreement. All actions taken on a Claim shall be stated in writing and submitted to the other party, with a copy to Engineer.

D. *Mediation*:

1. At any time after initiation of a Claim, Owner and Contractor may mutually agree to mediation of the underlying dispute. The agreement to mediate shall stay the Claim submittal and response process.

2. If Owner and Contractor agree to mediation, then after 60 days from such agreement, either Owner or Contractor may unilaterally terminate the mediation process, and the Claim submittal and decision process shall resume as of the date of the termination. If the mediation proceeds but is unsuccessful in resolving the dispute, the Claim submittal and decision process shall resume as of the date of the conclusion of the mediation, as determined by the mediator.

3. Owner and Contractor shall each pay one-half of the mediator's fees and costs.

E. *Partial Approval*: If the party receiving a Claim approves the Claim in part and denies it in part, such action shall be final and binding unless within 30 days of such action the other party invokes the procedure set forth in Article 17 for final resolution of disputes.

F. *Denial of Claim*: If efforts to resolve a Claim are not successful, the party receiving the Claim may deny it by giving written notice of denial to the other party. If the receiving party does not take action on the Claim within 90 days, then either Owner or Contractor may at any time thereafter submit a letter to the other party indicating that as a result of the inaction, the Claim is deemed denied, thereby commencing the time for appeal of the denial. A denial of the Claim shall be final and binding unless within 30 days of the denial the other party invokes the procedure set forth in Article 17 for the final resolution of disputes.

G. *Final and Binding Results*: If the parties reach a mutual agreement regarding a Claim, whether through approval of the Claim, direct negotiations, mediation, or otherwise; or if a Claim is approved in part and denied in part, or denied in full, and such actions become final and binding; then the results of the agreement or action on the Claim shall be incorporated in a Change Order to the extent they affect the Contract, including the Work, the Contract Times, or the Contract Price.

ARTICLE 13 – COST OF THE WORK; ALLOWANCES; UNIT PRICE WORK

13.01 *Cost of the Work*

A. *Purposes for Determination of Cost of the Work*: The term Cost of the Work means the sum of all costs necessary for the proper performance of the Work at issue, as further defined below. The provisions of this Paragraph 13.01 are used for two distinct purposes:

1. To determine Cost of the Work when Cost of the Work is a component of the Contract Price, under cost-plus-fee, time-and-materials, or other cost-based terms; or

Copyright © 2013 National Society of Professional Engineers, American Council of Engineering Companies, and American Society of Civil Engineers. All rights reserved.

2. To determine the value of a Change Order, Change Proposal, Claim, set-off, or other adjustment in Contract Price. When the value of any such adjustment is determined on the basis of Cost of the Work, Contractor is entitled only to those additional or incremental costs required because of the change in the Work or because of the event giving rise to the adjustment.

B. *Costs Included*: Except as otherwise may be agreed to in writing by Owner, costs included in the Cost of the Work shall be in amounts no higher than those prevailing in the locality of the Project, shall not include any of the costs itemized in Paragraph 13.01.C, and shall include only the following items:

1. Payroll costs for employees in the direct employ of Contractor in the performance of the Work under schedules of job classifications agreed upon by Owner and Contractor. Such employees shall include, without limitation, superintendents, foremen, and other personnel employed full time on the Work. Payroll costs for employees not employed full time on the Work shall be apportioned on the basis of their time spent on the Work. Payroll costs shall include, but not be limited to, salaries and wages plus the cost of fringe benefits, which shall include social security contributions, unemployment, excise, and payroll taxes, workers' compensation, health and retirement benefits, bonuses, sick leave, and vacation and holiday pay applicable thereto. The expenses of performing Work outside of regular working hours, on Saturday, Sunday, or legal holidays, shall be included in the above to the extent authorized by Owner.

2. Cost of all materials and equipment furnished and incorporated in the Work, including costs of transportation and storage thereof, and Suppliers' field services required in connection therewith. All cash discounts shall accrue to Contractor unless Owner deposits funds with Contractor with which to make payments, in which case the cash discounts shall accrue to Owner. All trade discounts, rebates, and refunds and returns from sale of surplus materials and equipment shall accrue to Owner, and Contractor shall make provisions so that they may be obtained.

3. Payments made by Contractor to Subcontractors for Work performed by Subcontractors. If required by Owner, Contractor shall obtain competitive bids from subcontractors acceptable to Owner and Contractor and shall deliver such bids to Owner, who will then determine, with the advice of Engineer, which bids, if any, will be acceptable. If any subcontract provides that the Subcontractor is to be paid on the basis of Cost of the Work plus a fee, the Subcontractor's Cost of the Work and fee shall be determined in the same manner as Contractor's Cost of the Work and fee as provided in this Paragraph 13.01.

4. Costs of special consultants (including but not limited to engineers, architects, testing laboratories, surveyors, attorneys, and accountants) employed for services specifically related to the Work.

5. Supplemental costs including the following:

    a. The proportion of necessary transportation, travel, and subsistence expenses of Contractor's employees incurred in discharge of duties connected with the Work.

    b. Cost, including transportation and maintenance, of all materials, supplies, equipment, machinery, appliances, office, and temporary facilities at the Site, and hand tools not owned by the workers, which are consumed in the performance of the Work, and cost, less market value, of such items used but not consumed which remain the property of Contractor.

Copyright © 2013 National Society of Professional Engineers, American Council of Engineering Companies, and American Society of Civil Engineers. All rights reserved.

c. Rentals of all construction equipment and machinery, and the parts thereof, whether rented from Contractor or others in accordance with rental agreements approved by Owner with the advice of Engineer, and the costs of transportation, loading, unloading, assembly, dismantling, and removal thereof. All such costs shall be in accordance with the terms of said rental agreements. The rental of any such equipment, machinery, or parts shall cease when the use thereof is no longer necessary for the Work.

d. Sales, consumer, use, and other similar taxes related to the Work, and for which Contractor is liable, as imposed by Laws and Regulations.

e. Deposits lost for causes other than negligence of Contractor, any Subcontractor, or anyone directly or indirectly employed by any of them or for whose acts any of them may be liable, and royalty payments and fees for permits and licenses.

f. Losses and damages (and related expenses) caused by damage to the Work, not compensated by insurance or otherwise, sustained by Contractor in connection with the performance of the Work (except losses and damages within the deductible amounts of property insurance established in accordance with Paragraph 6.05), provided such losses and damages have resulted from causes other than the negligence of Contractor, any Subcontractor, or anyone directly or indirectly employed by any of them or for whose acts any of them may be liable. Such losses shall include settlements made with the written consent and approval of Owner. No such losses, damages, and expenses shall be included in the Cost of the Work for the purpose of determining Contractor's fee.

g. The cost of utilities, fuel, and sanitary facilities at the Site.

h. Minor expenses such as communication service at the Site, express and courier services, and similar petty cash items in connection with the Work.

i. The costs of premiums for all bonds and insurance that Contractor is required by the Contract Documents to purchase and maintain.

C. *Costs Excluded*: The term Cost of the Work shall not include any of the following items:

1. Payroll costs and other compensation of Contractor's officers, executives, principals (of partnerships and sole proprietorships), general managers, safety managers, engineers, architects, estimators, attorneys, auditors, accountants, purchasing and contracting agents, expediters, timekeepers, clerks, and other personnel employed by Contractor, whether at the Site or in Contractor's principal or branch office for general administration of the Work and not specifically included in the agreed upon schedule of job classifications referred to in Paragraph 13.01.B.1 or specifically covered by Paragraph 13.01.B.4. The payroll costs and other compensation excluded here are to be considered administrative costs covered by the Contractor's fee.

2. Expenses of Contractor's principal and branch offices other than Contractor's office at the Site.

3. Any part of Contractor's capital expenses, including interest on Contractor's capital employed for the Work and charges against Contractor for delinquent payments.

4. Costs due to the negligence of Contractor, any Subcontractor, or anyone directly or indirectly employed by any of them or for whose acts any of them may be liable, including but not limited to, the correction of defective Work, disposal of materials or equipment wrongly supplied, and making good any damage to property.

Copyright © 2013 National Society of Professional Engineers, American Council of Engineering Companies, and American Society of Civil Engineers. All rights reserved.

5. Other overhead or general expense costs of any kind and the costs of any item not specifically and expressly included in Paragraph 13.01.B.

D. *Contractor's Fee*: When the Work as a whole is performed on the basis of cost-plus, Contractor's fee shall be determined as set forth in the Agreement. When the value of any Work covered by a Change Order, Change Proposal, Claim, set-off, or other adjustment in Contract Price is determined on the basis of Cost of the Work, Contractor's fee shall be determined as set forth in Paragraph 11.04.C.

E. *Documentation*: Whenever the Cost of the Work for any purpose is to be determined pursuant to this Article 13, Contractor will establish and maintain records thereof in accordance with generally accepted accounting practices and submit in a form acceptable to Engineer an itemized cost breakdown together with supporting data.

13.02 *Allowances*

A. It is understood that Contractor has included in the Contract Price all allowances so named in the Contract Documents and shall cause the Work so covered to be performed for such sums and by such persons or entities as may be acceptable to Owner and Engineer.

B. *Cash Allowances*: Contractor agrees that:

1. the cash allowances include the cost to Contractor (less any applicable trade discounts) of materials and equipment required by the allowances to be delivered at the Site, and all applicable taxes; and

2. Contractor's costs for unloading and handling on the Site, labor, installation, overhead, profit, and other expenses contemplated for the cash allowances have been included in the Contract Price and not in the allowances, and no demand for additional payment on account of any of the foregoing will be valid.

~~C. [Deleted]*Contingency Allowance*: Contractor agrees that a contingency allowance, if any, is for the sole use of Owner to cover unanticipated costs.~~

C. Prior to final payment, an appropriate Change Order will be issued as recommended by Engineer to reflect actual amounts due Contractor on account of Work covered by allowances, and the Contract Price shall be correspondingly adjusted.

13.03 *Unit Price Work*

A. Where the Contract Documents provide that all or part of the Work is to be Unit Price Work, initially the Contract Price will be deemed to include for all Unit Price Work an amount equal to the sum of the unit price for each separately identified item of Unit Price Work times the estimated quantity of each item as indicated in the Agreement.

B. The estimated quantities of items of Unit Price Work are not guaranteed and are solely for the purpose of comparison of Bids and determining an initial Contract Price. Payments to Contractor for Unit Price Work will be based on actual quantities.

C. Each unit price will be deemed to include an amount considered by Contractor to be adequate to cover Contractor's overhead and profit for each separately identified item.

D. Engineer will determine the actual quantities and classifications of Unit Price Work performed by Contractor. Engineer will review with Contractor the Engineer's preliminary determinations on such matters before rendering a written decision thereon (by recommendation of an Application for Payment or otherwise). Engineer's written decision thereon will be final and binding (except as modified by Engineer to reflect changed factual

Copyright © 2013 National Society of Professional Engineers, American Council of Engineering Companies, and American Society of Civil Engineers. All rights reserved.

conditions or more accurate data) upon Owner and Contractor, subject to the provisions of the following paragraph.

E. The unit price of an item of Unit Price Work shall be subject to reevaluation and adjustment under the following conditions:~~Within 30 days of Engineer's written decision under the preceding paragraph, Contractor may submit a Change Proposal, or Owner may file a Claim, seeking an adjustment in the Contract Price if:~~

1. If the extended price of a particular item of Unit Price Work amounts to 5 percent or more of the Contract Price (based on estimated quantities at the time of Contract formation) and the variation in the quantity of that particular item of Unit Price Work actually furnished or performed by Contractor differs by more than 25 percent from the quantity of such item indicated in the Agreement; and~~the quantity of any item of Unit Price Work performed by Contractor differs materially and significantly from the estimated quantity of such item indicated in the Agreement;~~

2. If there is no corresponding adjustment with respect to any other item of Work; and~~there is no corresponding adjustment with respect to any other item of Work; and~~

3. If Contractor believes that Contractor has incurred additional expense as a result thereof, Contractor may submit a Change Proposal, or if Owner believes tha the quantity variation entities Owner to an adjustment in the unit price, Owner may make a Claim, seeking an adjustment in the Contract Price. ~~Contractor believes that it is entitled to an increase in Contract Price as a result of having incurred additional expense or Owner believes that Owner is entitled to a decrease in Contract Price, and the parties are unable to agree as to the amount of any such increase or decrease.~~

ARTICLE 14 – TESTS AND INSPECTIONS; CORRECTION, REMOVAL OR ACCEPTANCE OF DEFECTIVE WORK

14.01 *Access to Work*

A. Owner, Engineer, their consultants and other representatives and personnel of Owner, independent testing laboratories, and authorities having jurisdiction will have access to the Site and the Work at reasonable times for their observation, inspection, and testing. Contractor shall provide them proper and safe conditions for such access and advise them of Contractor's safety procedures and programs so that they may comply therewith as applicable.

14.02 *Tests, Inspections, and Approvals*

A. Contractor shall give Engineer timely notice of readiness of the Work (or specific parts thereof) for all required inspections and tests and shall cooperate with inspection and testing personnel to facilitate required inspections and tests.

B. Owner shall retain and pay for the services of an independent inspector, testing laboratory, or other qualified individual or entity to perform all inspections and tests expressly required by the Contract Documents to be furnished and paid for by Owner, except that costs incurred in connection with tests or inspections of covered Work shall be governed by the provisions of Paragraph 14.05.

C. If Laws or Regulations of any public body having jurisdiction require any Work (or part thereof) specifically to be inspected, tested, or approved by an employee or other representative of such public body, Contractor shall assume full responsibility for arranging and obtaining such inspections, tests, or approvals, pay all costs in connection therewith, and furnish Engineer the required certificates of inspection or approval.

Copyright © 2013 National Society of Professional Engineers, American Council of Engineering Companies, and American Society of Civil Engineers. All rights reserved.

D. Contractor shall be responsible for arranging, obtaining, and paying for all inspections and tests required:

1. by the Contract Documents, unless the Contract Documents expressly allocate responsibility for a specific inspection or test to Owner;

2. to attain Owner's and Engineer's acceptance of materials or equipment to be incorporated in the Work;

3. by manufacturers of equipment furnished under the Contract Documents;

4. for testing, adjusting, and balancing of mechanical, electrical, and other equipment to be incorporated into the Work; and

5. for acceptance of materials, mix designs, or equipment submitted for approval prior to Contractor's purchase thereof for incorporation in the Work.

Such inspections and tests shall be performed by independent inspectors, testing laboratories, or other qualified individuals or entities acceptable to Owner and Engineer.

E. If the Contract Documents require the Work (or part thereof) to be approved by Owner, Engineer, or another designated individual or entity, then Contractor shall assume full responsibility for arranging and obtaining such approvals.

F. If any Work (or the work of others) that is to be inspected, tested, or approved is covered by Contractor without written concurrence of Engineer, Contractor shall, if requested by Engineer, uncover such Work for observation. Such uncovering shall be at Contractor's expense unless Contractor had given Engineer timely notice of Contractor's intention to cover the same and Engineer had not acted with reasonable promptness in response to such notice.

14.03 *Defective Work*

A. *Contractor's Obligation*: It is Contractor's obligation to assure that the Work is not defective.

B. *Engineer's Authority*: Engineer has the authority to determine whether Work is defective, and to reject defective Work.

C. *Notice of Defects*: Prompt notice of all defective Work of which Owner or Engineer has actual knowledge will be given to Contractor.

D. *Correction, or Removal and Replacement*: Promptly after receipt of written notice of defective Work, Contractor shall correct all such defective Work, whether or not fabricated, installed, or completed, or, if Engineer has rejected the defective Work, remove it from the Project and replace it with Work that is not defective.

E. *Preservation of Warranties*: When correcting defective Work, Contractor shall take no action that would void or otherwise impair Owner's special warranty and guarantee, if any, on said Work.

F. *Costs and Damages*: In addition to its correction, removal, and replacement obligations with respect to defective Work, Contractor shall pay all claims, costs, losses, and damages arising out of or relating to defective Work, including but not limited to the cost of the inspection, testing, correction, removal, replacement, or reconstruction of such defective Work, fines levied against Owner by governmental authorities because the Work is defective, and the costs of repair or replacement of work of others resulting from defective Work. Prior to final payment, if Owner and Contractor are unable to agree as to the measure of such claims,

Copyright © 2013 National Society of Professional Engineers, American Council of Engineering Companies, and American Society of Civil Engineers. All rights reserved.

costs, losses, and damages resulting from defective Work, then Owner may impose a reasonable set-off against payments due under Article 15.

~~F.~~G. Installation of Materials that are non-compliant with American Iron and Steel requirements shall be considered defective work.

14.04 *Acceptance of Defective Work*

A. If, instead of requiring correction or removal and replacement of defective Work, Owner prefers to accept it, Owner may do so (subject, if such acceptance occurs prior to final payment, to Engineer's confirmation that such acceptance is in general accord with the design intent and applicable engineering principles, and will not endanger public safety). Contractor shall pay all claims, costs, losses, and damages attributable to Owner's evaluation of and determination to accept such defective Work (such costs to be approved by Engineer as to reasonableness), and for the diminished value of the Work to the extent not otherwise paid by Contractor. If any such acceptance occurs prior to final payment, the necessary revisions in the Contract Documents with respect to the Work shall be incorporated in a Change Order. If the parties are unable to agree as to the decrease in the Contract Price, reflecting the diminished value of Work so accepted, then Owner may impose a reasonable set-off against payments due under Article 15. If the acceptance of defective Work occurs after final payment, Contractor shall pay an appropriate amount to Owner.

14.05 *Uncovering Work*

A. Engineer has the authority to require special inspection or testing of the Work, whether or not the Work is fabricated, installed, or completed.

B. If any Work is covered contrary to the written request of Engineer, then Contractor shall, if requested by Engineer, uncover such Work for Engineer's observation, and then replace the covering, all at Contractor's expense.

C. If Engineer considers it necessary or advisable that covered Work be observed by Engineer or inspected or tested by others, then Contractor, at Engineer's request, shall uncover, expose, or otherwise make available for observation, inspection, or testing as Engineer may require, that portion of the Work in question, and provide all necessary labor, material, and equipment.

1. If it is found that the uncovered Work is defective, Contractor shall be responsible for all claims, costs, losses, and damages arising out of or relating to such uncovering, exposure, observation, inspection, and testing, and of satisfactory replacement or reconstruction (including but not limited to all costs of repair or replacement of work of others); and pending Contractor's full discharge of this responsibility the Owner shall be entitled to impose a reasonable set-off against payments due under Article 15.

2. If the uncovered Work is not found to be defective, Contractor shall be allowed an increase in the Contract Price or an extension of the Contract Times, or both, directly attributable to such uncovering, exposure, observation, inspection, testing, replacement, and reconstruction. If the parties are unable to agree as to the amount or extent thereof, then Contractor may submit a Change Proposal within 30 days of the determination that the Work is not defective.

14.06 *Owner May Stop the Work*

A. If the Work is defective, or Contractor fails to supply sufficient skilled workers or suitable materials or equipment, or fails to perform the Work in such a way that the completed Work will conform to the Contract Documents, then Owner may order Contractor to stop the Work,

Copyright © 2013 National Society of Professional Engineers, American Council of Engineering Companies, and American Society of Civil Engineers. All rights reserved.

or any portion thereof, until the cause for such order has been eliminated; however, this right of Owner to stop the Work shall not give rise to any duty on the part of Owner to exercise this right for the benefit of Contractor, any Subcontractor, any Supplier, any other individual or entity, or any surety for, or employee or agent of any of them.

14.07 *Owner May Correct Defective Work*

A. If Contractor fails within a reasonable time after written notice from Engineer to correct defective Work, or to remove and replace rejected Work as required by Engineer, or if Contractor fails to perform the Work in accordance with the Contract Documents, or if Contractor fails to comply with any other provision of the Contract Documents, then Owner may, after seven days written notice to Contractor, correct or remedy any such deficiency.

B. In exercising the rights and remedies under this Paragraph 14.07, Owner shall proceed expeditiously. In connection with such corrective or remedial action, Owner may exclude Contractor from all or part of the Site, take possession of all or part of the Work and suspend Contractor's services related thereto, and incorporate in the Work all materials and equipment stored at the Site or for which Owner has paid Contractor but which are stored elsewhere. Contractor shall allow Owner, Owner's representatives, agents and employees, Owner's other contractors, and Engineer and Engineer's consultants access to the Site to enable Owner to exercise the rights and remedies under this paragraph.

C. All claims, costs, losses, and damages incurred or sustained by Owner in exercising the rights and remedies under this Paragraph 14.07 will be charged against Contractor as set-offs against payments due under Article 15. Such claims, costs, losses and damages will include but not be limited to all costs of repair, or replacement of work of others destroyed or damaged by correction, removal, or replacement of Contractor's defective Work.

D. Contractor shall not be allowed an extension of the Contract Times because of any delay in the performance of the Work attributable to the exercise by Owner of Owner's rights and remedies under this Paragraph 14.07.

ARTICLE 15 – PAYMENTS TO CONTRACTOR; SET-OFFS; COMPLETION; CORRECTION PERIOD

15.01 *Progress Payments*

A. *Basis for Progress Payments*: The Schedule of Values established as provided in Article 2 will serve as the basis for progress payments and will be incorporated into a form of Application for Payment acceptable to Engineer. Progress payments on account of Unit Price Work will be based on the number of units completed during the pay period, as determined under the provisions of Paragraph 13.03. Progress payments for cost-based Work will be based on Cost of the Work completed by Contractor during the pay period.

B. *Applications for Payments*:

1. At least 20 days before the date established in the Agreement for each progress payment (but not more often than once a month), Contractor shall submit to Engineer for review an Application for Payment filled out and signed by Contractor covering the Work completed as of the date of the Application and accompanied by such supporting documentation as is required by the Contract Documents. If payment is requested on the basis of materials and equipment not incorporated in the Work but delivered and suitably stored at the Site or at another location agreed to in writing, the Application for Payment shall also be accompanied by ~~a bill of sale, invoice, or other~~ documentation warranting that Owner has received the materials and equipment free and clear of all Liens, and evidence that the materials and equipment are covered by appropriate

Copyright © 2013 National Society of Professional Engineers, American Council of Engineering Companies, and American Society of Civil Engineers. All rights reserved.

property insurance, a warehouse bond, or other arrangements to protect Owner's interest therein, all of which must be satisfactory to Owner.

2. Beginning with the second Application for Payment, each Application shall include an affidavit of Contractor stating that all previous progress payments received on account of the Work have been applied on account to discharge Contractor's legitimate obligations associated with prior Applications for Payment.

3. The amount of retainage with respect to progress payments will be as stipulated in the Agreement. No payments will be made that would deplete the retainage, place in escrow any funds that are required for retainage, or invest the retainage for the benefit of the Contractor.

4. The Application for Payment form to be used on this Project is EJCDC C-620. The Agency must approve all Applications for Payment before payment is made.

5. By submitting Materials for payment, Contractor is certifying that the submitted Materials are compliant with American Iron and Steel requirements. Manufacturer's Certification letter for Materials satisfy this certification. Refer to Manufacturer's Certification Letter provided in these Contract Documents.

C. *Review of Applications*:

1. Engineer will, within 10 days after receipt of each Application for Payment, including each resubmittal, either indicate in writing a recommendation of payment and present the Application to Owner, or return the Application to Contractor indicating in writing Engineer's reasons for refusing to recommend payment. In the latter case, Contractor may make the necessary corrections and resubmit the Application.

2. Engineer's recommendation of any payment requested in an Application for Payment will constitute a representation by Engineer to Owner, based on Engineer's observations of the executed Work as an experienced and qualified design professional, and on Engineer's review of the Application for Payment and the accompanying data and schedules, that to the best of Engineer's knowledge, information and belief:

   a. the Work has progressed to the point indicated;

   b. the quality of the Work is generally in accordance with the Contract Documents (subject to an evaluation of the Work as a functioning whole prior to or upon Substantial Completion, the results of any subsequent tests called for in the Contract Documents, a final determination of quantities and classifications for Unit Price Work under Paragraph 13.03, and any other qualifications stated in the recommendation); and

   c. the conditions precedent to Contractor's being entitled to such payment appear to have been fulfilled in so far as it is Engineer's responsibility to observe the Work.

   ~~c.~~d. the Materials presented for payment comply with American Iron and Steel.

3. By recommending any such payment Engineer will not thereby be deemed to have represented that:

   a. inspections made to check the quality or the quantity of the Work as it has been performed have been exhaustive, extended to every aspect of the Work in progress, or involved detailed inspections of the Work beyond the responsibilities specifically assigned to Engineer in the Contract; or

Copyright © 2013 National Society of Professional Engineers, American Council of Engineering Companies, and American Society of Civil Engineers. All rights reserved.

b. there may not be other matters or issues between the parties that might entitle Contractor to be paid additionally by Owner or entitle Owner to withhold payment to Contractor.

4. Neither Engineer's review of Contractor's Work for the purposes of recommending payments nor Engineer's recommendation of any payment, including final payment, will impose responsibility on Engineer:

   a. to supervise, direct, or control the Work, or

   b. for the means, methods, techniques, sequences, or procedures of construction, or the safety precautions and programs incident thereto, or

   c. for Contractor's failure to comply with Laws and Regulations applicable to Contractor's performance of the Work, or

   d. to make any examination to ascertain how or for what purposes Contractor has used the money paid on account of the Contract Price, or

   e. to determine that title to any of the Work, materials, or equipment has passed to Owner free and clear of any Liens.

5. Engineer may refuse to recommend the whole or any part of any payment if, in Engineer's opinion, it would be incorrect to make the representations to Owner stated in Paragraph 15.01.C.2.

6. Engineer will recommend reductions in payment (set-offs) necessary in Engineer's opinion to protect Owner from loss because:

   a. the Work is defective, requiring correction or replacement;

   b. the Contract Price has been reduced by Change Orders;

   c. Owner has been required to correct defective Work in accordance with Paragraph 14.07, or has accepted defective Work pursuant to Paragraph 14.04;

   d. Owner has been required to remove or remediate a Hazardous Environmental Condition for which Contractor is responsible; or

   e. Engineer has actual knowledge of the occurrence of any of the events that would constitute a default by Contractor and therefore justify termination for cause under the Contract Documents.

D. *Payment Becomes Due*:

~~1. Ten days after presentation of the Application for Payment to Owner with Engineer's recommendation, the amount recommended (subject to any Owner set-offs) will become due, and when due will be paid by Owner to Contractor.~~

1. The Application for Payment with Engineer's recommendations will be presented to the Owner and Agency for consideration. If both the Owner and Agency find the Application for Payment acceptable, the recommended amount less any reduction under the provisions of Paragraph 15.01.E will become ten (10) days after transfer of corresponding funds to the Owner's bank account, and the Owner will make payment to the Contractor.

Copyright © 2013 National Society of Professional Engineers, American Council of Engineering Companies, and American Society of Civil Engineers. All rights reserved.

E. *Reductions in Payment by Owner*:

1. In addition to any reductions in payment (set-offs) recommended by Engineer, Owner is entitled to impose a set-off against payment based on any of the following:

    a. claims have been made against Owner on account of Contractor's conduct in the performance or furnishing of the Work, or Owner has incurred costs, losses, or damages on account of Contractor's conduct in the performance or furnishing of the Work, including but not limited to claims, costs, losses, or damages from workplace injuries, adjacent property damage, non-compliance with Laws and Regulations, and patent infringement;

    b. Contractor has failed to take reasonable and customary measures to avoid damage, delay, disruption, and interference with other work at or adjacent to the Site;

    c. Contractor has failed to provide and maintain required bonds or insurance;

    d. Owner has been required to remove or remediate a Hazardous Environmental Condition for which Contractor is responsible;

    e. Owner has incurred extra charges or engineering costs related to submittal reviews, evaluations of proposed substitutes, tests and inspections, or return visits to manufacturing or assembly facilities;

    f. the Work is defective, requiring correction or replacement;

    g. Owner has been required to correct defective Work in accordance with Paragraph 14.07, or has accepted defective Work pursuant to Paragraph 14.04;

    h. the Contract Price has been reduced by Change Orders;

    i. an event that would constitute a default by Contractor and therefore justify a termination for cause has occurred;

    j. liquidated damages have accrued as a result of Contractor's failure to achieve Milestones, Substantial Completion, or final completion of the Work;

    k. Liens have been filed in connection with the Work, except where Contractor has delivered a specific bond satisfactory to Owner to secure the satisfaction and discharge of such Liens;

    l. there are other items entitling Owner to a set off against the amount recommended.

2. If Owner imposes any set-off against payment, whether based on its own knowledge or on the written recommendations of Engineer, Owner will give Contractor immediate written notice (with a copy to Engineer) stating the reasons for such action and the specific amount of the reduction, and promptly pay Contractor any amount remaining after deduction of the amount so withheld. Owner shall promptly pay Contractor the amount so withheld, or any adjustment thereto agreed to by Owner and Contractor, if Contractor remedies the reasons for such action. The reduction imposed shall be binding on Contractor unless it duly submits a Change Proposal contesting the reduction.

3. Upon a subsequent determination that Owner's refusal of payment was not justified, the amount wrongfully withheld shall be treated as an amount due as determined by Paragraph 15.01.C.1 and subject to interest as provided in the Agreement.

Copyright © 2013 National Society of Professional Engineers, American Council of Engineering Companies, and American Society of Civil Engineers. All rights reserved.

15.02 *Contractor's Warranty of Title*

A. Contractor warrants and guarantees that title to all Work, materials, and equipment furnished under the Contract will pass to Owner free and clear of (1) all Liens and other title defects, and (2) all patent, licensing, copyright, or royalty obligations, ~~no later than seven days after the time of payment by Owner.~~ no later than the time of payment by Owner.

15.03 *Substantial Completion*

A. When Contractor considers the entire Work ready for its intended use Contractor shall notify Owner and Engineer in writing that the entire Work is substantially complete and request that Engineer issue a certificate of Substantial Completion. Contractor shall at the same time submit to Owner and Engineer an initial draft of punch list items to be completed or corrected before final payment. Services required to determine and certify that to the best of the Contractor's knowledge and belief all substitutes, equals, and all iron and steel products proposed in the shop drawings, Change Orders and Partial Payment Estimates, and those installed for the project are either produced in the United States or are the subject of an approved waiver under Section 746 of Title VII of the Consolidated Appropriations Act of 2017 (Division A - Agriculture, Rural Development, Food and Drug Administration, and Related Agencies Appropriations Act, 2017) and subsequent statutes mandating domestic preference.

Promptly after Contractor's notification, Owner, Contractor, and Engineer shall make an inspection of the Work to determine the status of completion. If Engineer does not consider the Work substantially complete, Engineer will notify Contractor in writing giving the reasons therefore. If some or all of the Work has been determined not to be at a point of Substantial Completion and will require re-inspection or re-testing by Engineer, the cost of such re-inspection or re-testing, including the cost of time, travel and living expenses, shall be paid by Contractor to Owner. If Contractor does not pay, or the parties are unable to agree as to the amount owed, then Owner may impose a reasonable set-off against payments due under Article 15.

B. If Engineer considers the Work substantially complete, Engineer will deliver to Owner a preliminary certificate of Substantial Completion which shall fix the date of Substantial Completion. Engineer shall attach to the certificate a punch list of items to be completed or corrected before final payment. Owner shall have seven days after receipt of the preliminary certificate during which to make written objection to Engineer as to any provisions of the certificate or attached punch list. If, after considering the objections to the provisions of the preliminary certificate, Engineer concludes that the Work is not substantially complete, Engineer will, within 14 days after submission of the preliminary certificate to Owner, notify Contractor in writing that the Work is not substantially complete, stating the reasons therefor. If Owner does not object to the provisions of the certificate, or if despite consideration of Owner's objections Engineer concludes that the Work is substantially complete, then Engineer will, within said 14 days, execute and deliver to Owner and Contractor a final certificate of Substantial Completion (with a revised punch list of items to be completed or corrected) reflecting such changes from the preliminary certificate as Engineer believes justified after consideration of any objections from Owner.

C. At the time of receipt of the preliminary certificate of Substantial Completion, Owner and Contractor will confer regarding Owner's use or occupancy of the Work following Substantial Completion, review the builder's risk insurance policy with respect to the end of the builder's risk coverage, and confirm the transition to coverage of the Work under a permanent property insurance policy held by Owner. Unless Owner and Contractor agree otherwise in

Copyright © 2013 National Society of Professional Engineers, American Council of Engineering Companies, and American Society of Civil Engineers. All rights reserved.

writing, Owner shall bear responsibility for security, operation, protection of the Work, property insurance, maintenance, heat, and utilities upon Owner's use or occupancy of the Work.

D. After Substantial Completion the Contractor shall promptly begin work on the punch list of items to be completed or corrected prior to final payment. In appropriate cases Contractor may submit monthly Applications for Payment for completed punch list items, following the progress payment procedures set forth above.

E. Owner shall have the right to exclude Contractor from the Site after the date of Substantial Completion subject to allowing Contractor reasonable access to remove its property and complete or correct items on the punch list.

15.04 *Partial Use or Occupancy*

A. Prior to Substantial Completion of all the Work, Owner may use or occupy any substantially completed part of the Work which has specifically been identified in the Contract Documents, or which Owner, Engineer, and Contractor agree constitutes a separately functioning and usable part of the Work that can be used by Owner for its intended purpose without significant interference with Contractor's performance of the remainder of the Work, subject to the following conditions:

1. At any time Owner may request in writing that Contractor permit Owner to use or occupy any such part of the Work that Owner believes to be substantially complete. If and when Contractor agrees that such part of the Work is substantially complete, Contractor, Owner, and Engineer will follow the procedures of Paragraph 15.03.A through E for that part of the Work.

2. At any time Contractor may notify Owner and Engineer in writing that Contractor considers any such part of the Work substantially complete and request Engineer to issue a certificate of Substantial Completion for that part of the Work.

3. Within a reasonable time after either such request, Owner, Contractor, and Engineer shall make an inspection of that part of the Work to determine its status of completion. If Engineer does not consider that part of the Work to be substantially complete, Engineer will notify Owner and Contractor in writing giving the reasons therefor. If Engineer considers that part of the Work to be substantially complete, the provisions of Paragraph 15.03 will apply with respect to certification of Substantial Completion of that part of the Work and the division of responsibility in respect thereof and access thereto.

4. No use or occupancy or separate operation of part of the Work may occur prior to compliance with the requirements of Paragraph 6.05 regarding builder's risk or other property insurance.

15.05 *Final Inspection*

A. Upon written notice from Contractor that the entire Work or an agreed portion thereof is complete, Engineer will promptly make a final inspection with Owner and Contractor and will notify Contractor in writing of all particulars in which this inspection reveals that the Work, or agreed portion thereof, is incomplete or defective. Contractor shall immediately take such measures as are necessary to complete such Work or remedy such deficiencies.

Copyright © 2013 National Society of Professional Engineers, American Council of Engineering Companies, and American Society of Civil Engineers. All rights reserved.

15.06 *Final Payment*

A. *Application for Payment*:

1. After Contractor has, in the opinion of Engineer, satisfactorily completed all corrections identified during the final inspection and has delivered, in accordance with the Contract Documents, all maintenance and operating instructions, schedules, guarantees, bonds, certificates or other evidence of insurance, certificates of inspection, annotated record documents (as provided in Paragraph 7.11), and other documents, Contractor may make application for final payment.

2. The final Application for Payment shall be accompanied (except as previously delivered) by:

   a. all documentation called for in the Contract Documents;

   b. consent of the surety, if any, to final payment;

   c. satisfactory evidence that all title issues have been resolved such that title to all Work, materials, and equipment has passed to Owner free and clear of any Liens or other title defects or will so pass upon final payment.

   d. a list of all disputes that Contractor believes are unsettled; and

   e. complete and legally effective releases or waivers (satisfactory to Owner) of all Lien rights arising out of the Work, and of Liens filed in connection with the Work.

3. In lieu of the releases or waivers of Liens specified in Paragraph 15.06.A.2 and as approved by Owner, Contractor may furnish receipts or releases in full and an affidavit of Contractor that: (a) the releases and receipts include all labor, services, material, and equipment for which a Lien could be filed; and (b) all payrolls, material and equipment bills, and other indebtedness connected with the Work for which Owner might in any way be responsible, or which might in any way result in liens or other burdens on Owner's property, have been paid or otherwise satisfied. If any Subcontractor or Supplier fails to furnish such a release or receipt in full, Contractor may furnish a bond or other collateral satisfactory to Owner to indemnify Owner against any Lien, or Owner at its option may issue joint checks payable to Contractor and specified Subcontractors and Suppliers.

B. *Engineer's Review of Application and Acceptance*:

1. If, on the basis of Engineer's observation of the Work during construction and final inspection, and Engineer's review of the final Application for Payment and accompanying documentation as required by the Contract Documents, Engineer is satisfied that the Work has been completed and Contractor's other obligations under the Contract have been fulfilled, Engineer will, within ten days after receipt of the final Application for Payment, indicate in writing Engineer's recommendation of final payment and present the Application for Payment to Owner for payment. Such recommendation shall account for any set-offs against payment that are necessary in Engineer's opinion to protect Owner from loss for the reasons stated above with respect to progress payments. At the same time Engineer will also give written notice to Owner and Contractor that the Work is acceptable, subject to the provisions of Paragraph 15.07. Otherwise, Engineer will return the Application for Payment to Contractor, indicating in writing the reasons for refusing to recommend final payment, in which case Contractor shall make the necessary corrections and resubmit the Application for Payment.

Copyright © 2013 National Society of Professional Engineers, American Council of Engineering Companies, and American Society of Civil Engineers. All rights reserved.

C. *Completion of Work*: The Work is complete (subject to surviving obligations) when it is ready for final payment as established by the Engineer's written recommendation of final payment.

D. *Payment Becomes Due*: Thirty days after the presentation to Owner of the final Application for Payment and accompanying documentation, the amount recommended by Engineer (less any further sum Owner is entitled to set off against Engineer's recommendation, including but not limited to set-offs for liquidated damages and set-offs allowed under the provisions above with respect to progress payments) will become due and shall be paid by Owner to Contractor.

15.07 *Waiver of Claims*

A. The making of final payment will not constitute a waiver by Owner of claims or rights against Contractor. Owner expressly reserves claims and rights arising from unsettled Liens, from defective Work appearing after final inspection pursuant to Paragraph 15.05, from Contractor's failure to comply with the Contract Documents or the terms of any special guarantees specified therein, from outstanding Claims by Owner, or from Contractor's continuing obligations under the Contract Documents.

B. The acceptance of final payment by Contractor will constitute a waiver by Contractor of all claims and rights against Owner other than those pending matters that have been duly submitted or appealed under the provisions of Article 17.

15.08 *Correction Period*

A. If within one year after the date of Substantial Completion (or such longer period of time as may be prescribed by the terms of any applicable special guarantee required by the Contract Documents, or by any specific provision of the Contract Documents), any Work is found to be defective, or if the repair of any damages to the Site, adjacent areas that Contractor has arranged to use through construction easements or otherwise, and other adjacent areas used by Contractor as permitted by Laws and Regulations, is found to be defective, then Contractor shall promptly, without cost to Owner and in accordance with Owner's written instructions:

1. correct the defective repairs to the Site or such other adjacent areas;

2. correct such defective Work;

3. if the defective Work has been rejected by Owner, remove it from the Project and replace it with Work that is not defective, and

4. satisfactorily correct or repair or remove and replace any damage to other Work, to the work of others, or to other land or areas resulting therefrom.

B. If Contractor does not promptly comply with the terms of Owner's written instructions, or in an emergency where delay would cause serious risk of loss or damage, Owner may have the defective Work corrected or repaired or may have the rejected Work removed and replaced. Contractor shall pay all claims, costs, losses, and damages (including but not limited to all fees and charges of engineers, architects, attorneys, and other professionals and all court or arbitration or other dispute resolution costs) arising out of or relating to such correction or repair or such removal and replacement (including but not limited to all costs of repair or replacement of work of others).

C. In special circumstances where a particular item of equipment is placed in continuous service before Substantial Completion of all the Work, the correction period for that item may start to run from an earlier date if so provided in the Specifications.

Copyright © 2013 National Society of Professional Engineers, American Council of Engineering Companies, and American Society of Civil Engineers. All rights reserved.

D. Where defective Work (and damage to other Work resulting therefrom) has been corrected or removed and replaced under this paragraph, the correction period hereunder with respect to such Work will be extended for an additional period of one year after such correction or removal and replacement has been satisfactorily completed.

E. Contractor's obligations under this paragraph are in addition to all other obligations and warranties. The provisions of this paragraph shall not be construed as a substitute for, or a waiver of, the provisions of any applicable statute of limitation or repose.

ARTICLE 16 – SUSPENSION OF WORK AND TERMINATION

16.01 *Owner May Suspend Work*

A. At any time and without cause, Owner may suspend the Work or any portion thereof for a period of not more than 90 consecutive days by written notice to Contractor and Engineer. Such notice will fix the date on which Work will be resumed. Contractor shall resume the Work on the date so fixed. Contractor shall be entitled to an adjustment in the Contract Price or an extension of the Contract Times, or both, directly attributable to any such suspension. Any Change Proposal seeking such adjustments shall be submitted no later than 30 days after the date fixed for resumption of Work.

16.02 *Owner May Terminate for Cause*

A. The occurrence of any one or more of the following events will constitute a default by Contractor and justify termination for cause:

1. Contractor's persistent failure to perform the Work in accordance with the Contract Documents (including, but not limited to, failure to supply sufficient skilled workers or suitable materials or equipment or failure to adhere to the Progress Schedule);

2. Failure of Contractor to perform or otherwise to comply with a material term of the Contract Documents;

3. Contractor's disregard of Laws or Regulations of any public body having jurisdiction; or

4. Contractor's repeated disregard of the authority of Owner or Engineer.

B. If one or more of the events identified in Paragraph 16.02.A occurs, then after giving Contractor (and any surety) ten days written notice that Owner is considering a declaration that Contractor is in default and termination of the contract, Owner may proceed to:

1. declare Contractor to be in default, and give Contractor (and any surety) notice that the Contract is terminated; and

2. enforce the rights available to Owner under any applicable performance bond.

C. Subject to the terms and operation of any applicable performance bond, if Owner has terminated the Contract for cause, Owner may exclude Contractor from the Site, take possession of the Work, incorporate in the Work all materials and equipment stored at the Site or for which Owner has paid Contractor but which are stored elsewhere, and complete the Work as Owner may deem expedient.

D. Owner may not proceed with termination of the Contract under Paragraph 16.02.B if Contractor within seven days of receipt of notice of intent to terminate begins to correct its failure to perform and proceeds diligently to cure such failure.

E. If Owner proceeds as provided in Paragraph 16.02.B, Contractor shall not be entitled to receive any further payment until the Work is completed. If the unpaid balance of the Contract Price exceeds the cost to complete the Work, including all related claims, costs,

Copyright © 2013 National Society of Professional Engineers, American Council of Engineering Companies, and American Society of Civil Engineers. All rights reserved.

losses, and damages (including but not limited to all fees and charges of engineers, architects, attorneys, and other professionals) sustained by Owner, such excess will be paid to Contractor. If the cost to complete the Work including such related claims, costs, losses, and damages exceeds such unpaid balance, Contractor shall pay the difference to Owner. Such claims, costs, losses, and damages incurred by Owner will be reviewed by Engineer as to their reasonableness and, when so approved by Engineer, incorporated in a Change Order. When exercising any rights or remedies under this paragraph, Owner shall not be required to obtain the lowest price for the Work performed.

F. Where Contractor's services have been so terminated by Owner, the termination will not affect any rights or remedies of Owner against Contractor then existing or which may thereafter accrue, or any rights or remedies of Owner against Contractor or any surety under any payment bond or performance bond. Any retention or payment of money due Contractor by Owner will not release Contractor from liability.

G. If and to the extent that Contractor has provided a performance bond under the provisions of Paragraph 6.01.A, the provisions of that bond shall govern over any inconsistent provisions of Paragraphs 16.02.B and 16.02.D.

16.03 *Owner May Terminate For Convenience*

A. Upon seven days written notice to Contractor and Engineer, Owner may, without cause and without prejudice to any other right or remedy of Owner, terminate the Contract. In such case, Contractor shall be paid for (without duplication of any items):

1. completed and acceptable Work executed in accordance with the Contract Documents prior to the effective date of termination, including fair and reasonable sums for overhead and profit on such Work;

2. expenses sustained prior to the effective date of termination in performing services and furnishing labor, materials, or equipment as required by the Contract Documents in connection with uncompleted Work, plus fair and reasonable sums for overhead and profit on such expenses; and

3. other reasonable expenses directly attributable to termination, including costs incurred to prepare a termination for convenience cost proposal.

B. Contractor shall not be paid on account of loss of anticipated overhead, profits, or revenue, or other economic loss arising out of or resulting from such termination.

16.04 *Contractor May Stop Work or Terminate*

A. If, through no act or fault of Contractor, (1) the Work is suspended for more than 90 consecutive days by Owner or under an order of court or other public authority, or (2) Engineer fails to act on any Application for Payment within 30 days after it is submitted, or (3) Owner fails for 30 days to pay Contractor any sum finally determined to be due, then Contractor may, upon seven days written notice to Owner and Engineer, and provided Owner or Engineer do not remedy such suspension or failure within that time, terminate the contract and recover from Owner payment on the same terms as provided in Paragraph 16.03.

B. In lieu of terminating the Contract and without prejudice to any other right or remedy, if Engineer has failed to act on an Application for Payment within 30 days after it is submitted, or Owner has failed for 30 days to pay Contractor any sum finally determined to be due, Contractor may, seven days after written notice to Owner and Engineer, stop the Work until payment is made of all such amounts due Contractor, including interest thereon. The

Copyright © 2013 National Society of Professional Engineers, American Council of Engineering Companies, and American Society of Civil Engineers. All rights reserved.

provisions of this paragraph are not intended to preclude Contractor from submitting a Change Proposal for an adjustment in Contract Price or Contract Times or otherwise for expenses or damage directly attributable to Contractor's stopping the Work as permitted by this paragraph.

ARTICLE 17 – FINAL RESOLUTION OF DISPUTES

17.01 *Methods and Procedures*

A. *Disputes Subject to Final Resolution*: The following disputed matters are subject to final resolution under the provisions of this Article:

1. A timely appeal of an approval in part and denial in part of a Claim, or of a denial in full; and

2. Disputes between Owner and Contractor concerning the Work or obligations under the Contract Documents and arising after final payment has been made.

B. *Final Resolution of Disputes*: For any dispute subject to resolution under this Article, Owner or Contractor may:

1. elect in writing to invoke the dispute resolution process provided for in these Standard General Conditions; or

2. agree with the other party to submit the dispute to another dispute resolution process; or

3. if no dispute resolution process is provided for in these Standard General Conditions or mutually agreed to, give written notice to the other party of the intent to submit the dispute to a court of competent jurisdiction.

ARTICLE 18 – MISCELLANEOUS

18.01 *Giving Notice*

A. Whenever any provision of the Contract Documents requires the giving of written notice, it will be deemed to have been validly given if:

1. delivered in person, by a commercial courier service or otherwise, to the individual or to a member of the firm or to an officer of the corporation for which it is intended; or

2. delivered at or sent by registered or certified mail, postage prepaid, to the last business address known to the sender of the notice.

18.02 *Computation of Times*

A. When any period of time is referred to in the Contract by days, it will be computed to exclude the first and include the last day of such period. If the last day of any such period falls on a Saturday or Sunday or on a day made a legal holiday by the law of the applicable jurisdiction, such day will be omitted from the computation.

18.03 *Cumulative Remedies*

A. The duties and obligations imposed by these General Conditions and the rights and remedies available hereunder to the parties hereto are in addition to, and are not to be construed in any way as a limitation of, any rights and remedies available to any or all of them which are otherwise imposed or available by Laws or Regulations, by special warranty or guarantee, or by other provisions of the Contract. The provisions of this paragraph will be as effective as if repeated specifically in the Contract Documents in connection with each particular duty, obligation, right, and remedy to which they apply.

Copyright © 2013 National Society of Professional Engineers, American Council of Engineering Companies, and American Society of Civil Engineers. All rights reserved.

18.04 *Limitation of Damages*

A. With respect to any and all Change Proposals, Claims, disputes subject to final resolution, and other matters at issue, neither Owner nor Engineer, nor any of their officers, directors, members, partners, employees, agents, consultants, or subcontractors, shall be liable to Contractor for any claims, costs, losses, or damages sustained by Contractor on or in connection with any other project or anticipated project.

18.05 *No Waiver*

A. A party's non-enforcement of any provision shall not constitute a waiver of that provision, nor shall it affect the enforceability of that provision or of the remainder of this Contract.

18.06 *Survival of Obligations*

A. All representations, indemnifications, warranties, and guarantees made in, required by, or given in accordance with the Contract, as well as all continuing obligations indicated in the Contract, will survive final payment, completion, and acceptance of the Work or termination or completion of the Contract or termination of the services of Contractor.

18.07 *Controlling Law*

A. This Contract is to be governed by the law of the state in which the Project is located.

18.08 *Headings*

A. Article and paragraph headings are inserted for convenience only and do not constitute parts of these General Conditions.

18.09 Tribal Sovereignty.

A. No provision of this Agreement will be construed by any of the signatories as abridging or debilitating any sovereign powers of the {insert name of Tribe} Tribe; affecting the trust-beneficiary relationship between the Secretary of the Interior, Tribe, and Indian landowner(s); or interfering with the government-to-government relationship between the United States and the Tribe.

ARTICLE 19 – FEDERAL REQUIREMENTS

19.01 *Agency Not a Party*

A. This Contract is expected to be funded in part with funds provided by Agency. Neither Agency, nor any of its departments, entities, or employees is a party to this Contract.

19.02 *Contract Approval*

A. Owner and Contractor will furnish Owner's attorney such evidence as required so that Owner's attorney can complete and execute the following "Certificate of Owner's Attorney" (Exhibit I of RUS Bulletin 1780-26 ~~GC-A~~) before Owner submits the executed Contract Documents to Agency for approval.

B. Concurrence by Agency in the award of the Contract is required before the Contract is effective.

19.03 *Conflict of Interest & Gratuities*

A. Contractor may not knowingly contract with a supplier or manufacturer if the individual or entity who prepared the plans and specifications has a corporate or financial affiliation with the supplier or manufacturer. Owner's officers, employees, or agents shall not engage in the award or administration of this Contract if a conflict of interest, real or apparent, would be involved. Such a conflict would arise when: (i) the employee, officer or agent; (ii) any member

Copyright © 2013 National Society of Professional Engineers, American Council of Engineering Companies, and American Society of Civil Engineers. All rights reserved.

of their immediate family; (iii) their partner or (iv) an organization that employs, or is about to employ, any of the above, has a financial interest in or other interest in or a tangible personal benefit from the Contractor. Owner's officers, employees, or agents shall neither solicit nor accept gratuities, favors or anything of monetary value from Contractor or subcontractors.

19.04 *Gratuities*

A. If Owner finds after a notice and hearing that Contractor, or any of Contractor's agents or representatives, offered or gave gratuities (in the form of entertainment, gifts, or otherwise) to any official, employee, or agent of Owner or Agency in an attempt to secure this Contract or favorable treatment in awarding, amending, or making any determinations related to the performance of this Contract, Owner may, by written notice to Contractor, terminate this Contract. Owner may also pursue other rights and remedies that the law or this Contract provides. However, the existence of the facts on which Owner bases such findings shall be an issue and may be reviewed in proceedings under the dispute resolution provisions of this Contract.

B. In the event this Contract is terminated as provided in paragraph 19.04.A, Owner may pursue the same remedies against Contractor as it could pursue in the event of a breach of this Contract by Contractor. As a penalty, in addition to any other damages to which it may be entitled by law, Owner may pursue exemplary damages in an amount (as determined by Owner) which shall not be less than three nor more than ten times the costs Contractor incurs in providing any such gratuities to any such officer or employee.

19.05 *Small, Minority, and Women's Businesses*

A. Contracting with small and minority businesses, women's business enterprises, and labor surplus area firms. If Contractor intends to let any subcontracts for a portion of the work, Contractor must take all necessary affirmative steps to assure that minority businesses, women's business enterprises, and labor surplus area firms are used when possible. Affirmative steps must include:

1. Placing qualified small and minority businesses and women's business enterprises on solicitation lists;

2. Assuring that small and minority businesses, and women's business enterprises are solicited whenever they are potential sources;

3. Dividing total requirements, when economically feasible, into smaller tasks or quantities to permit maximum participation by small and minority businesses, and women's business enterprises;

4. Establishing delivery schedules, where the requirement permits, which encourage participation by small and minority businesses, and women's business enterprises; and

5. Using the services and assistance, as appropriate, of such organizations as the Small Business Administration and the Minority Business Development Agency of the Department of Commerce.

19.06 *Anti-Kickback*

A. Contractor shall comply with the Copeland Anti-Kickback Act (~~18 USC 874 and~~ 40 U.S.C. ~~276c~~3145) as supplemented by Department of Labor regulations (29 CFR Part 3, "Contractors and Subcontractors on Public Buildings or Public Works Financed in Whole or in Part by Loans or Grants of the United States"). The Act provides that Contractor or subcontractor shall be prohibited from inducing, by any means, any person employed in the construction,

Copyright © 2013 National Society of Professional Engineers, American Council of Engineering Companies, and American Society of Civil Engineers. All rights reserved.

completion, or repair of public work, to give up any part of the compensation to which he or she is otherwise entitled. Owner shall report all suspected or reported violations to Agency.

19.07 *Clean Air Act (42U.S.C. 7401-767q.) and the Federal Water Pollution Control Act~~s~~ (33 U.S.C.1251-1387) as amended:*

A. ~~If this Contract exceeds $100,000, Compliance~~ Contractor to agree to comply with all applicable standards, orders, or regulations issued ~~under section 306 of~~ pursuant to the Clean Air Act (42 U.S.C. 7401-7671q ~~1857(h) and 42 USC~~)~~et. seq.), section 508 of the Clean Water Act (33 U.S.C. 1368) and~~ and the Federal Water Pollution Control Act as amended (33 U.S.C. 1251-1387 ~~et seq), Executive Order 11738, and Environmental Protection Agency regulations (40 CFR part 15) is required. Contractor will report violations to the Agency and the Regional Office of the EPA~~) Violations must be reported to the Federal awarding agency and the Regional Office of the Environmental Protection Agency (EPA).

19.08 *Equal Employment Opportunity ~~Requirements~~*

~~If this Contract exceeds $10,000, Contractor shall comply with Executive Order 11246, "Equal Employment Opportunity," as amended by Executive Order 11375, "Amending Executive Order 11246 Relating to Equal Employment Opportunity," and as supplemented by regulations at 41 CFR part 60, "Office of Federal Contract Compliance Programs, Equal Employment Opportunity, Department of Labor."~~

~~Contractor's compliance with Executive Order 11246 shall be based on its implementation of the Equal Opportunity Clause, specific affirmative active obligations required by the Standard Federal Equal Employment Opportunity Construction Contract Specifications, as set forth in 41 CFR Part 60-4 and its efforts to meet the goals established for the geographical area where the Contract is to be performed. The hours of minority and female employment and training must be substantially uniform throughout the length of the Contract, and in each trade, and Contractor shall make a good faith effort to employ minorities and women evenly on each of its projects. The transfer of minority or female employees or trainees from Contractor to Contractor or from project to project for the sole purpose of meeting Contractor's goals shall be a violation of the Contract, the Executive Order, and the regulations in 41 CFR Part 60-4. Compliance with the goals will be measured against the total work hours performed.~~

~~A. Contractor shall provide written notification to the Director of the Office of Federal Contract Compliance Programs within 10 working days of award of any construction subcontract in excess of $10,000 at any tier for construction work under the Contract resulting from this solicitation. The notification shall list the name, address, and telephone number of the subcontractor; employer identification number; estimated dollar amount of subcontract; estimated starting and completion dates of the subcontract; and the geographical area in which the Contract is to be performed.~~

A. The Contract is considered a federally assisted construction contract. Except as otherwise provided under 41 CFR Part 60, all contracts that meet the definition of "federally assisted construction contract" in 41 CFR Part 60-1.3 must include the equal opportunity clause provided under CFR 60-1.4(b), in accordance with Executive Order 11246, "Equal Employment Opportunity" (30FR 12319, 12935, 3 CFR Part, 1964-1965 Comp., p. 339), as amended by Executive Order 11375,"Amending Executive Order 11246 Relating to Equal Employment Opportunity," and implementing regulations at 41 CFR part 60, "Office of Federal Contract Compliance Programs, Equal Employment Opportunity, Department of Labor."

Copyright © 2013 National Society of Professional Engineers, American Council of Engineering Companies, and American Society of Civil Engineers. All rights reserved.

19.09 *Byrd Anti-Lobbying ~~Restrictions on~~ Amendment (31 U.S.C. 1352)*

A. Contractors that apply or bid for an award exceeding $100,000 must file the required certification (RD Instruction1940-Q, Exhibit A-1). The Contractor certifies to the Owner and every subcontractor certifies to the Contractor that it will not and has not used Federal appropriated funds to pay any person or organization for influencing or attempting to influence an officer or employee of any agency, a member of Congress, officer or employee of Congress, or an employee of a member of Congress in connection with obtaining the Contract if it is covered by 31 U.S.C. 1352. The Contractor and every subcontractor must also disclose any lobbying with non-Federal funds that takes place in connection with obtaining any Federal award. Such disclosures are forwarded from tier to tier up to the Owner. Necessary certification and disclosure forms shall be provided by Owner. ~~Contractor and each subcontractor shall comply with Restrictions on Lobbying (Public Law 101-121, Section 319) as supplemented by applicable Agency regulations. This Law applies to the recipients of contracts and subcontracts that exceed $100,000 at any tier under a Federal loan that exceeds $150,000 or a Federal grant that exceeds $100,000. If applicable, Contractor must complete a certification form on lobbying activities related to a specific Federal loan or grant that is a funding source for this Contract. Each tier certifies to the tier above that it will not and has not used Federal appropriated funds to pay any person or organization for influencing or attempting to influence an officer or employee of any agency, a member of Congress, or an employee of a member of Congress in connection with obtaining any Federal contract, grant, or any other award covered by 31 USC 1352. Each tier shall disclose any lobbying with non-Federal funds that takes place in connection with obtaining any Federal award. Certifications and disclosures are forwarded from tier to tier up to the Owner. Necessary certification and disclosure forms shall be provided by Owner.~~

19.10 *Environmental Requirements*

A. When constructing a Project involving trenching and/or other related earth excavations, Contractor shall comply with the following environmental conditions:

1. Wetlands – When disposing of excess, spoil, or other construction materials on public or private property, Contractor shall not fill in or otherwise convert wetlands.

2. Floodplains – When disposing of excess, spoil, or other construction materials on public or private property, Contractor shall not fill in or otherwise convert 100 year floodplain areas (Standard Flood Hazard Area) delineated on the latest Federal Emergency Management Agency Floodplain Maps, or other appropriate maps, e.g., alluvial soils on NRCS Soil Survey Maps.

3. Historic Preservation – Any excavation by Contractor that uncovers an historical or archaeological artifact shall be immediately reported to Owner and a representative of Agency. Construction shall be temporarily halted pending the notification process and further directions issued by Agency after consultation with the State Historic Preservation Officer (SHPO).

4. Endangered Species – Contractor shall comply with the Endangered Species Act, which provides for the protection of endangered and/or threatened species and critical habitat. Should any evidence of the presence of endangered and/or threatened species or their critical habitat be brought to the attention of Contractor, Contractor will immediately report this evidence to Owner and a representative of Agency. Construction shall be temporarily halted pending the notification process and further directions issued by Agency after consultation with the U.S. Fish and Wildlife Service.

Copyright © 2013 National Society of Professional Engineers, American Council of Engineering Companies, and American Society of Civil Engineers. All rights reserved.

5. Mitigation Measures ~~– If the project had an Environmental Report, Environmental Assessment, or Environmental Impact Statement to meet the requirements of the National Environmental Policy Act, compliance with the mitigation measures, if any, in that document are hereby included as a condition of this contract.~~ The following environmental mitigation measures are required on this Project. These mitigation measures are as follows: Water main installation construction will NOT take place on Arenzville Road and Stock Lane during the breeding season which occurs a few weeks out of February, March and April. The maximum trench width will be 12-inches and the maximum construction area is 15 feet. All persons on the construction job will be informed of the possibility of the threatened species being present in the project area. If a Chorus Frog is seen on the job site construction will stop and IDNR contacted.

19.11 *Contract Work Hours and Safety Standard Act (40 U.S.C. 3701-3708):*

A. Where applicable, for contracts awarded by the Owner in excess of $100,00 that involve the employment of mechanics or laborers, the Contractor must comply with 40 U.S.C. 3702 and 3704, as supplemented by the Department of Labor regulations (29 CFR Part 5). Under 40 U.S.C. 3702 of the Act, the Contractor must compute the wages of every mechanic and laborer on the basis of standard work week of 40 hours. Work in excess of the standard work week is permissible provided that the worker is compensated at a rate of not less than one and a half times the basic rate of pay for all hours worked in excess of 40 hours in the work week. The requirements of 40 U.S.C. 3704 are applicable to construction work and provide that no laborer or mechanic must be required to work in surroundings or under working conditions which are unsanitary, hazardous or dangerous. These requirements do not apply to the purchases of supplies or materials or articles ordinarily available on the open market or contracts for transportation or transmission of intelligence.

19.12 *Debarment and Suspension (Executive Orders 12549 and 12689)*

A. A contract award (see 2 CFR 180.220) must not be made to parties listed on the governmentwide exclusions in the System for Award Management (SAM), in accordance with the OMB guidelines at 2 CFR 180 that implement Executive Orders 12549 (3 CFR part 1986 Comp., p. 189) and 12689 (3 CFR part 1989 Comp., p. 235), "Debarment and Suspension." SAM Exclusions contains the names of parties debarred, suspended, or otherwise excluded by agencies, as well as parties declared ineligible under statutory or regulatory authority other than Executive Order 12549.

19.13 *Procurement of Recovered Materials:*

A. The Contractor must comply with 2 CFR Part 200.322, "Procurement of recovered materials."

19.14 *American Iron & Steel (AIS) Requirements:*

A. Section 746 of Title VII of the Consolidated Appropriations Act of 2017 (Division A - Agriculture, Rural Development, Food and Drug Administration, and Related Agencies Appropriations Act, 2017) and subsequent statutes mandating domestic preference applies an American Iron and Steel requirement to this project. All iron and steel products used in this project must be produced in the United States. The term "iron and steel products" means the following products made primarily of iron or steel: lined or unlined pipes and fittings, manhole covers and other municipal castings, hydrants, tanks, flanges, pipe clamps and restraints, valves, structural steel, reinforced precast concrete, and construction materials. *The Deminimis Components, Minor Components and Pig Iron waivers apply to this contract.*

Copyright © 2013 National Society of Professional Engineers, American Council of Engineering Companies, and American Society of Civil Engineers. All rights reserved.

19.15 *Definitions*

A. "Assistance recipient" is the entity that receives funding assistance from programs required to comply with Section 746 Division A Title VII of the Consolidated Appropriations Act of 2017 (Agriculture, Rural Development, Food and Drug Administration, and Related Agencies Appropriations Act, 2017) and subsequent statutes mandating domestic preference. This term includes owner and/or applicant.

B. "Certifications" means the following:

Manufacturers' certification is documentation provided by the manufacturer or fabricator to various entities stating that the iron and steel products to be used in the project are produced in the United States in accordance with American Iron and Steel (AIS) Requirements. If items are purchased via a supplier, distributor, vendor, etc. vs. from the manufacturer or fabricator directly, then the supplier, distributor, vendor, etc. will be responsible for obtaining and providing these certification letters to the parties purchasing the products.

Engineers' certification is documentation that plans, specifications, and bidding documents comply with AIS.

Contractors' certification is documentation submitted upon substantial completion of the project that all iron and steel products installed were produced in the United States.

C. "Coating" means a covering that is applied to the surface of an object. If a coating is applied to the external surface of a domestic iron or steel component, and the application takes place outside of the United States, said product would be considered a compliant product under the AIS requirements. Any coating processes that are applied to the external surface of iron and steel components that would otherwise be AIS compliant would not disqualify the product from meeting the AIS requirements regardless of where the coating processes occur, provided that final assembly of the product occurs in the United States. This exemption only applies to coatings on the *external surface* of iron and steel components. It does not apply to coatings or linings on internal surfaces of iron and steel products, such as the lining of lined pipes. All manufacturing processes for lined pipes, including the application of pipe lining, must occur in the United States for the product to be compliant with AIS requirements.

D. "Construction materials" are those articles, materials, or supplies made primarily of iron and steel, that are permanently incorporated into the project, not including mechanical and/or electrical components, equipment and systems. Some of these products may overlap with what is also considered "structural steel".

Note: Mechanical and electrical components, equipment and systems are not considered construction materials. See definition of mechanical and electrical equipment.

E. "Consulting engineer" is an individual or entity with which the owner has contracted to perform engineering/architectural services for water and waste projects funded by the programs subject to AIS requirements).

F. "De minimis incidental components" are various miscellaneous low-cost components that are essential for, but incidental to, the construction and are incorporated into the physical structure of the project. Examples of incidental components could include small washers, screws, fasteners (such as "off the shelf" nuts and bolts), miscellaneous wire, corner bead, ancillary tube, signage, trash bins, door hardware etc. Costs for such de minimis incidental components cumulatively may comprise no more than a total of five percent of the total cost of the materials used in and incorporated into a project; the cost of an individual item may not exceed one percent of the total cost of the materials used in and incorporated into a project.

Copyright © 2013 National Society of Professional Engineers, American Council of Engineering Companies, and American Society of Civil Engineers. All rights reserved.

G. "General contractor" is the individual or entity with which the applicant has contracted (*or is expected to*) to perform construction services (or for water and waste projects funded by the programs subject to AIS requirements). This includes bidders, contractors that have received an award from the applicant and any party having a direct contractual relationship with the owner/applicant. A general contractor is often referred to as the prime contractor.

H. "Iron and steel products" are defined as the following products made primarily of iron or steel: lined or unlined pipes and fittings, manhole covers and other municipal castings, hydrants, tanks, flanges, pipe clamps and restraints, valves, structural steel, reinforced precast concrete, and construction materials. Only items on the above list made primarily of iron or steel, permanently incorporated into the project must be produced in the United States. For example, trench boxes, scaffolding or equipment, which are removed from the project site upon completion of the project, are not required to be made of U.S. Iron or Steel.

I. "Manufacturers" meaning a supplier, fabricator, distributor, materialman, or vendor is an entity with which the applicant, general contractor or with any subcontractor has contracted to furnish materials or equipment to be incorporated in the project by the applicant, contractor or a subcontractor.

J. "Manufacturing processes" are processes such as melting, refining, forming, rolling, drawing, finishing, and fabricating. Further, if a domestic iron and steel product is taken out of the United States for any part of the manufacturing process, it becomes foreign source material. However, raw materials such as iron ore, limestone and iron and steel scrap are not covered by the AIS requirement, and the material(s), if any, being applied as a coating are similarly not covered. Non-iron or steel components of an iron and steel product may come from non-US sources. For example, for products such as valves and hydrants, the individual non-iron and steel components do not have to be of domestic origin. Raw materials, such as iron ore, limestone, scrap iron, and scrap steel, can come from non-U.S. sources.

K. "Mechanical equipment" is typically that which has motorized parts and/or is powered by a motor. "Electrical equipment" is typically any machine powered by electricity and includes components that are part of the electrical distribution system. AIS does apply to mechanical equipment.

L. "Minor components" are components *within* an iron and/or steel product otherwise compliant with the American Iron and Steel requirements. This is different from the de minimis definition where de minimis pertains to the entire project and the minor component definition pertains to a single product. This waiver would allow non-domestically produced miscellaneous minor components comprising up to five percent of the total material cost of an otherwise domestically produced iron and steel product to be used. However, unless a separate waiver for a product has been approved, all other iron and steel components in said product must still meet the AIS requirements. This waiver does not exempt the whole product from the AIS requirements only minor components within said product and the iron or steel components of the product must be produced domestically. Valves and hydrants are also subject to the cost ceiling requirements described here. Examples of minor components could include items such pins and springs in valves/hydrants, bands/straps in couplings, and other low cost items such as small fasteners etc.

M. "Municipal castings" are cast iron or steel infrastructure products that are melted and cast. They typically provide access, protection, or housing for components incorporated into utility owned drinking water, storm water, wastewater, and solid waste infrastructure.

N. "National Office" refers to the office responsible for the oversight and administration of the program nationally. The National Office sets policy, develops program regulations, and

Copyright © 2013 National Society of Professional Engineers, American Council of Engineering Companies, and American Society of Civil Engineers. All rights reserved.

provides training and technical assistance to help the state offices administer the program. The National Office is located in Washington, D.C.

O. "Owner" is the individual or entity with which the general contractor has contracted regarding the work, and which has agreed to pay the general contractor for the performance of the work, pursuant to the terms of the contract for water and waste projects funded by the programs subject to AIS requirements. For the purpose of this Bulletin, this term is synonymous with the term "applicant" as defined in 7 CFR 1780.7 (a) (1), (2) and (3) and is an entity receiving financial assistance from the programs subject to the AIS requirements.

P. "Pass through Entities" is an entity that provides a subaward to a loan and/or grant recipient to carry out part of a Federal program. Examples are grantees utilizing the Revolving Loan Program and Household Water Well Program and Alaska Native Tribal Health Consortium (ANTHC) or the State of Alaska from the RAVG Program.

Q. "Pig Iron" is a product of iron ore smelting in a blast furnace. It is made from molten iron, which has been cast in the shape of "pigs" as it comes from the blast furnace.

Direct reduced iron is produced from iron ore, pellets or fines which are reduced in a solid state using natural gas or another reductant, Pig iron and direct reduced iron are used by the required composition to achieve the quality required by the industry.

This waiver permits the use of pig iron and direct reduced iron manufactured outside of the United States in domestic manufacturing processes for iron and steel production that are subsequently used in iron and steel products for water and watste projects funded by WEP. Approval of this waiver is supported by Section 746 (b)(2), which allows for a waiver in cases where"…iron and steel products are not produced in the United States in sufficient and reasonably available quantities or of a satisfactory quality." The effective date of this waiver will be retroactive to 5 May 2017

R. "Primarily iron or steel" is defined as a product made of greater than 50 percent iron or steel, measured by cost. The cost should be based on the material costs. An exception to this definition is reinforced precast concrete (see Definitions). All technical specifications and applicable industry standards (e.g. NIST, NSF, AWWA) must be met. If a product is determined to be less than 50 percent iron and steel, the AIS requirements do not apply.

For example, the cost of a fire hydrant includes:

The cost of materials used for the iron portion of a fire hydrant (e.g. bonnet, body and shoe); and

The cost to pour and cast to create those components (e.g. labor and energy).

Not included in the cost are:

The additional material costs for the non-iron and steel internal workings of the hydrant (e.g. stem, coupling, valve, seals, etc.); and

The cost to assemble the internal workings into the hydrant body.

S. "Produced in the United States" means that the production in the United States of the iron or steel products used in the project requires that all manufacturing processes must take place in the United States, with the exception of metallurgical processes involving refinement of steel additives.

T. "Project" is the total undertaking to be accomplished for the applicant by consulting engineers, general contractors, and others, including the planning, study, design, construction, testing, commissioning, and start-up, and of which the work to be performed under the contract is a part. A project includes all activity that an applicant is undertaking to be financed in whole or part by programs subject to AIS requirements. The intentional

Copyright © 2013 National Society of Professional Engineers, American Council of Engineering Companies, and American Society of Civil Engineers. All rights reserved.

splitting of projects into separate and smaller contracts or obligations to avoid AIS requirements is prohibited.

U. "Reinforced Precast Concrete" may not consist of at least 50 percent iron or steel, but the reinforcing bar and wire must be produced in the United States and meet the same standards as for any other iron or steel product.

Additionally, the casting of the concrete product must take place in the United States. The cement and other raw materials used in concrete production are not required to be of domestic origin. If the reinforced concrete is cast at the construction site, the reinforcing bar and wire are considered to be a construction material and must be produced in the United States.

V. "Steel" means an alloy that includes at least 50 percent iron, between 0.02 and 2 percent carbon, and may include other elements. Metallic elements such as chromium, nickel, molybdenum, manganese, and silicon may be added during the melting of steel for the purpose of enhancing properties such as corrosion resistance, hardness, or strength. The definition of steel covers carbon steel, alloy steel, stainless steel, tool steel, and other specialty steels.

W. "Structural steel" is rolled flanged shapes, having at least one dimension of their cross-section three inches or greater, which are used in the construction of bridges, buildings, ships, railroad rolling stock, and for numerous other constructional purposes. Such shapes are designated as wide-flange shapes, standard I-beams, channels, angles, tees, and zees. Other shapes include but are not limited to, H-piles, sheet piling, tie plates, cross ties, and those for other special purposes.

X. "Ultimate recipient" is a loan or grant recipient receiving funds from a pass- through entity. Examples include: (1) a loan recipient from the Revolving Loan Fund; (2) a loan recipient from the Household Water Well Program; and (3) a grant recipient from ANTHC or the State of Alaska from the RAVG Program.

Y. "United States" means each of the several states, the District of Columbia, and each Federally Recognized Indian Tribe.

ARTICLE 20 – STATE OF ILLINOIS REQUIREMENTS

~~20.01 *State Prevailing Wage Rate Requirements*~~

~~A. The Contractor shall be required to pay a minimum of the State Prevailing Wage Rates for the project area, in accordance with Illinois State Law.~~

20.01 *Employment of Illinois Workers on Public Works*

A. If at the time this contract is executed, or if during the term of this contract, there is excessive unemployment in Illinois as defined in the employment of Illinois Workers on Public Works Act, 30ILCS 570-0.01 et seq., as two consecutive months of unemployment exceeding 5%, the Contractor agrees to employ Illinois Laborers. An Illinois Laborer is defined as any person who has resided in Illinois for at least thirty (30) days and intends to become or remain an Illinois resident.

20.02 *Substance Abuse Prevention on Public Works Projects Act*

A. The Contractor shall be required to comply with the Substance Abuse Prevention on Public Works Projects Act (Public Act 095-0635; HB 1855). As such, the Contractor may be required to sign the Owner's Substance Abuse Prevention Program Certification.

Copyright © 2013 National Society of Professional Engineers, American Council of Engineering Companies, and American Society of Civil Engineers. All rights reserved.

Wage Rates

Intentionally Blank

Jersey County Prevailing Wage Rates posted on 3/15/2021

						Overtime								
Trade Title	**Rg**	**Type**	**C**	**Base**	**Foreman**	**M-F**	**Sa**	**Su**	**Hol**	**H/W**	**Pension**	**Vac**	**Trng**	**Other Ins**
ASBESTOS ABT-GEN	All	ALL		31.19	31.69	1.5	1.5	2.0	2.0	7.25	18.68	0.00	0.80	
ASBESTOS ABT-MEC	All	BLD		32.00	33.00	1.5	1.5	2.0	2.0	9.00	6.25	0.00	0.50	
BOILERMAKER	All	BLD		39.00	41.50	1.5	1.5	2.0	2.0	7.07	24.52	1.50	1.05	
BRICK MASON	All	BLD		34.38	36.44	1.5	1.5	2.0	2.0	9.50	14.35	0.00	0.88	
CARPENTER	All	ALL		40.37	41.87	1.5	1.5	2.0	2.0	7.72	10.05	0.00	0.65	
CEMENT MASON	All	ALL		35.55	36.55	1.5	1.5	2.0	2.0	10.15	15.50	0.00	0.50	
CERAMIC TILE FINISHER	All	BLD		26.99		1.5	1.5	2.0	2.0	8.00	6.98	0.00	0.81	
ELECTRIC PWR EQMT OP	All	ALL		47.24	47.24	1.5	1.5	2.0	2.0	6.75	13.23	0.00	0.47	3.00
ELECTRIC PWR GRNDMAN	All	ALL		31.10	31.10	1.5	1.5	2.0	2.0	6.75	8.71	0.00	0.31	3.00
ELECTRIC PWR LINEMAN	All	ALL		55.18	58.31	1.5	1.5	2.0	2.0	6.75	16.33	0.00	0.55	3.00
ELECTRIC PWR TRK DRV	All	ALL		35.24	35.24	1.5	1.5	2.0	2.0	6.75	9.87	0.00	0.35	3.00
ELECTRICIAN	All	ALL		45.14	47.39	1.5	1.5	2.0	2.0	10.25	12.87	0.00	0.23	1.25
ELECTRONIC SYSTEM TECH	All	BLD		32.96	34.96	1.5	1.5	2.0	2.0	10.25	7.84	0.00	0.40	
ELEVATOR CONSTRUCTOR	All	BLD		51.73	58.20	2.0	2.0	2.0	2.0	15.72	18.41	4.14	0.63	
FLOOR LAYER	All	BLD		35.06	35.81	1.5	1.5	2.0	2.0	7.72	10.05	0.00	0.65	
GLAZIER	All	BLD		36.51	38.51	1.5	1.5	2.0	2.0	6.45	11.45	0.00	0.68	
HEAT/FROST INSULATOR	All	BLD		39.38	40.38	1.5	1.5	2.0	2.0	10.79	13.10	0.00	0.80	
IRON WORKER	All	ALL		34.50	36.50	1.5	1.5	2.0	2.0	10.46	17.00	0.00	0.42	
LABORER	All	ALL		30.69	31.19	1.5	1.5	2.0	2.0	7.25	18.68	0.00	0.80	
MACHINIST	All	BLD		49.68	52.18	1.5	1.5	2.0	2.0	7.93	8.95	1.85	1.47	
MARBLE FINISHER	All	BLD		26.99		1.5	1.5	2.0	2.0	8.00	6.98	0.00	0.81	
MILLWRIGHT	All	ALL		40.37	41.87	1.5	1.5	2.0	2.0	7.72	10.05	0.00	0.65	
OPERATING ENGINEER	All	BLD	1	39.85	42.85	1.5	1.5	2.0	2.0	13.55	18.65	0.00	1.25	
OPERATING ENGINEER	All	BLD	2	38.72	42.85	1.5	1.5	2.0	2.0	13.55	18.65	0.00	1.25	
OPERATING ENGINEER	All	BLD	3	34.24	42.85	1.5	1.5	2.0	2.0	13.55	18.65	0.00	1.25	
OPERATING ENGINEER	All	BLD	4	34.30	42.85	1.5	1.5	2.0	2.0	13.55	18.65	0.00	1.25	
OPERATING ENGINEER	All	BLD	5	33.97	42.85	1.5	1.5	2.0	2.0	13.55	18.65	0.00	1.25	
OPERATING ENGINEER	All	BLD	6	42.40	42.85	1.5	1.5	2.0	2.0	13.55	18.65	0.00	1.25	
OPERATING ENGINEER	All	BLD	7	42.70	42.85	1.5	1.5	2.0	2.0	13.55	18.65	0.00	1.25	
OPERATING ENGINEER	All	BLD	8	42.98	42.85	1.5	1.5	2.0	2.0	13.55	18.65	0.00	1.25	
OPERATING ENGINEER	All	BLD	9	40.85	42.85	1.5	1.5	2.0	2.0	13.55	18.65	0.00	1.25	

OPERATING ENGINEER	All	HWY	1	38.35	41.35	1.5	1.5	2.0	2.0	13.55	18.65	0.00	1.25	
OPERATING ENGINEER	All	HWY	2	37.22	41.35	1.5	1.5	2.0	2.0	13.55	18.65	0.00	1.25	
OPERATING ENGINEER	All	HWY	3	32.74	41.35	1.5	1.5	2.0	2.0	13.55	18.65	0.00	1.25	
OPERATING ENGINEER	All	HWY	4	32.80	41.35	1.5	1.5	2.0	2.0	13.55	18.65	0.00	1.25	
OPERATING ENGINEER	All	HWY	5	32.47	41.35	1.5	1.5	2.0	2.0	13.55	18.65	0.00	1.25	
OPERATING ENGINEER	All	HWY	6	40.90	41.35	1.5	1.5	2.0	2.0	13.55	18.65	0.00	1.25	
OPERATING ENGINEER	All	HWY	7	41.20	41.35	1.5	1.5	2.0	2.0	13.55	18.65	0.00	1.25	
OPERATING ENGINEER	All	HWY	8	41.48	41.35	1.5	1.5	2.0	2.0	13.55	18.65	0.00	1.25	
OPERATING ENGINEER	All	HWY	9	39.35	41.35	1.5	1.5	2.0	2.0	13.55	18.65	0.00	1.25	
PAINTER	All	BLD		31.95	33.45	1.5	1.5	2.0	2.0	6.45	12.42	0.00	0.70	
PAINTER	All	HWY		33.15	34.65	1.5	1.5	2.0	2.0	6.45	12.42	0.00	0.70	
PAINTER OVER 30 FT.	All	BLD		32.95	34.45	1.5	1.5	2.0	2.0	6.45	12.42	0.00	0.70	
PAINTER PWR EQMT	All	BLD		32.95	34.45	1.5	1.5	2.0	2.0	6.45	12.42	0.00	0.70	
PAINTER PWR EQMT	All	HWY		34.15	35.65	1.5	1.5	2.0	2.0	6.45	12.42	0.00	0.70	
PILEDRIVER	All	ALL		40.37	41.87	1.5	1.5	2.0	2.0	7.72	10.05	0.00	0.65	
PIPEFITTER	All	BLD		45.21	47.47	1.5	2.0	2.0	2.0	5.00	10.40	0.00	0.60	
PLASTERER	All	BLD		34.00	35.50	1.5	1.5	2.0	2.0	10.15	10.55	0.00	0.50	
PLUMBER	All	BLD		45.21	47.47	1.5	2.0	2.0	2.0	5.00	10.40	0.00	0.60	
ROOFER	All	BLD		34.65	36.65	1.5	1.5	2.0	2.0	9.25	9.55	0.00	0.46	
SHEETMETAL WORKER	All	ALL		36.57	38.07	1.5	1.5	2.0	2.0	10.65	9.29	2.19	0.71	1.76
SPRINKLER FITTER	All	BLD		44.80	48.30	2.0	2.0	2.0	2.0	9.63	14.30	0.00	1.10	
TERRAZZO FINISHER	All	BLD		26.99		1.5	1.5	2.0	2.0	8.00	6.98	0.00	0.81	
TERRAZZO MASON	All	BLD		32.47	33.97	1.5	1.5	2.0	2.0	8.00	8.00	0.00	0.90	
TRUCK DRIVER	All	ALL	1	39.04	43.28	1.5	1.5	2.0	2.0	13.52	6.86	0.00	0.25	
TRUCK DRIVER	All	ALL	2	39.60	43.28	1.5	1.5	2.0	2.0	13.52	6.86	0.00	0.25	
TRUCK DRIVER	All	ALL	3	39.91	43.28	1.5	1.5	2.0	2.0	13.52	6.86	0.00	0.25	
TRUCK DRIVER	All	ALL	4	40.25	43.28	1.5	1.5	2.0	2.0	13.52	6.86	0.00	0.25	
TRUCK DRIVER	All	ALL	5	41.33	43.28	1.5	1.5	2.0	2.0	13.52	6.86	0.00	0.25	
TRUCK DRIVER	All	O&C	1	31.23	34.62	1.5	1.5	2.0	2.0	13.52	6.86	0.00	0.25	
TRUCK DRIVER	All	O&C	2	31.68	34.62	1.5	1.5	2.0	2.0	13.52	6.86	0.00	0.25	
TRUCK DRIVER	All	O&C	3	31.93	34.62	1.5	1.5	2.0	2.0	13.52	6.86	0.00	0.25	
TRUCK DRIVER	All	O&C	4	32.20	34.62	1.5	1.5	2.0	2.0	13.52	6.86	0.00	0.25	
TRUCK DRIVER	All	O&C	5	33.06	34.62	1.5	1.5	2.0	2.0	13.52	6.86	0.00	0.25	

Legend

Rg Region

Type Trade Type - All,Highway,Building,Floating,Oil & Chip,Rivers
C Class
Base Base Wage Rate
OT M-F Unless otherwise noted, OT pay is required for any hour greater than 8 worked each day, Mon through Fri. The number listed is the multiple of the base wage.
OT Sa Overtime pay required for every hour worked on Saturdays
OT Su Overtime pay required for every hour worked on Sundays
OT Hol Overtime pay required for every hour worked on Holidays
H/W Health/Welfare benefit
Vac Vacation
Trng Training
Other Ins Employer hourly cost for any other type(s) of insurance provided for benefit of worker.

Explanations JERSEY COUNTY

The following list is considered as those days for which holiday rates of wages for work performed apply: New Years Day, Memorial Day, Fourth of July, Labor Day, Thanksgiving Day, Christmas Day and Veterans Day in some classifications/counties. Generally, any of these holidays which fall on a Sunday is celebrated on the following Monday. This then makes work performed on that Monday payable at the appropriate overtime rate for holiday pay. Common practice in a given local may alter certain days of celebration. If in doubt, please check with IDOL.

Oil and chip resealing (O&C) means the application of road oils and liquid asphalt to coat an existing road surface, followed by application of aggregate chips or gravel to coated surface, and subsequent rolling of material to seal the surface.

EXPLANATION OF CLASSES

ASBESTOS - GENERAL - removal of asbestos material/mold and hazardous materials from any place in a building, including mechanical systems where those mechanical systems are to be removed. This includes the removal of asbestos materials/mold and hazardous materials from ductwork or pipes in a building when the building is to be demolished at the time or at some close future date. ASBESTOS - MECHANICAL - removal of asbestos material from mechanical systems, such as pipes, ducts, and boilers, where the mechanical systems are to remain.

CERAMIC TILE FINISHER AND MARBLE FINISHER

The handling, at the building site, of all sand, cement, tile, marble or stone and all other materials that may be used and installed by [a] tile layer or marble mason. In addition, the grouting, cleaning, sealing, and mixing on the job site, and all other work as required in assisting the setter. The term "Ceramic" is used for naming the classification only and is in no way a limitation of the product handled. Ceramic takes into consideration most hard tiles.

ELECTRONIC SYSTEMS TECHNICIAN

Installation, service and maintenance of low-voltage systems which utilizes the transmission and/or transference of voice, sound, vision, or digital for commercial, education, security and entertainment purposes for the following: TV monitoring and surveillance, background/foreground music, intercom and telephone interconnect, field programming, inventory control systems, microwave transmission, multi-media, multiplex, radio page, school, intercom and sound burglar alarms and low voltage master clock systems.

Excluded from this classification are energy management systems, life safety systems, supervisory controls and data acquisition systems not intrinsic with the above listed systems, fire alarm systems, nurse call systems and raceways exceeding fifteen feet in length.

OPERATING ENGINEER - BUILDING

GROUP I. Cranes, Dragline, Shovels, Skimmer Scoops, Clamshells or Derrick Boats, Pile Drivers, Crane-Type Backhoes, Asphalt Plant Operators, Concrete Plant Operators, Dredges, Asphalt Spreading Machines, All Locomotives, Cable Ways or Tower Machines, Hoists, Hydraulic Backhoes, Ditching Machines or Backfiller, Cherrypickers, Overhead Cranes, Roller - Steam or Gas, Concrete Pavers, Excavators, Concrete Breakers, Concrete Pumps, Bulk Cement Plants, Cement Pumps, Derrick-Type Drills, Boat Operators, Motor Graders or Pushcats, Scoops or Tournapulls, Bulldozers, Endloaders or Fork Lifts, Power Blade or Elevating Graders, Winch Cats, Boom or Winch Trucks or Boom Tractors, Pipe Wrapping or Painting Machines, Asphalt Plant Engineer, Journeyman Lubricating Engineer, Drills (other than Derrick Type), Mud Jacks, or Well Drilling Machines, Boring Machines or Track Jacks, Mixers, Conveyors (Two), Air Compressors (Two), Water Pumps regardless of size (Two), Welding Machines (Two), Siphons or Jets (Two), Winch Heads or Apparatuses (Two), Light Plants (Two), All Tractors regardless of size (straight tractor only), Fireman on Stationary Boilers, Automatic Elevators, Form Grading Machines, Finishing Machines, Power Sub-Grader or Ribbon Machines, Longitudinal Floats, Distributor Operators on Trucks, Winch Heads or Apparatuses (One), Mobil Track air and heaters (two to five), Heavy Equipment Greaser, Relief Operator, Assistant Master Mechanic and Heavy Duty Mechanic, self-propelled concrete saws of all types and sizes with their attachments, gob-hoppers, excavators all sizes, the repair and greasing of all diesel hammers, the operation and set-up of bidwells, water blasters of all sizes and their clutches, hydraulic jacks where used for hoisting, operation of log skidders, iceolators used on and off of pipeline, condor cranes, bow boats, survey boats, bobcats and all their attachments, skid steer loaders and all their attachments, creter cranes, batch plants, operator (all sizes), self propelled roto mills, operation of conveyor systems of any size and any configuration, operation, repair and service of all vibratory hammers, all power pacs and their controls regardless of location, curtains or brush burning machines, stump cutter machines, Nail launchers when mounted on a machine or self-propelled, operation of con-cover machines, and all Operators except those listed below).

GROUP II. Assistant Operators.

GROUP III. Air Compressors (One), Water Pumps, regardless of Size (One), Waterblasters (one), Welding Machine (One), Mixers (One Bag), Conveyor (One), Siphon or Jet (One), Light Plant (One), Heater (One), Immobile Track Air (One), and Self Propelled Walk-Behind Rollers.

GROUP IV. Asphalt Spreader Oilers, Fireman on Whirlies and Heavy Equipment Oilers, Truck Cranes, Dredges, Monigans, Large Cranes - (Over 65-ton rated capacity) Concrete Plant Oiler, Blacktop Plant Oiler, and Creter Crane Oiler (when required).

GROUP V. Oiler.

GROUP VI. Operators on equipment with Booms,including jibs, 100 feet and over, and less than 150 feet long.

GROUP VII. Operators on equipment with Booms, including jibs, 150 feet and over, and less than 200 feet long.

GROUP VIII. Operators on Equipment with Booms, including jibs, 200 feet and over; Tower Cranes; and Whirlie Cranes.

GROUP IX. Master Mechanic

OPERATING ENGINEERS - Highway

GROUP I. Cranes, Dragline, Shovels, Skimmer Scoops, Clamshells or Derrick Boats, Pile Drivers, Crane-Type Backhoes, Asphalt Plant Operators, Concrete Plant Operators, Dredges, Asphalt Spreading Machines, All Locomotives, Cable Ways or Tower Machines, Hoists, Hydraulic Backhoes, Ditching Machines or Backfiller, Cherrypickers, Overhead Cranes, Roller - Steam or Gas, Concrete Pavers, Excavators, Concrete Breakers, Concrete Pumps, Bulk Cement Plants, Cement Pumps, Derrick-Type Drills, Boat Operators, Motor Graders or Pushcats, Scoops or Tournapulls, Bulldozers, Endloaders or Fork Lifts, Power Blade or Elevating Graders, Winch Cats, Boom or Winch Trucks or Boom Tractors, Pipe Wrapping or Painting Machines, Asphalt Plant Engineer, Journeyman Lubricating Engineer, Drills (other than Derrick Type), Mud Jacks, Well Drilling Machines, Boring Machines, Track

Jacks, Mixers, Conveyors (Two), Air Compressors (Two), Water Pumps regardless of size (Two), Welding Machines (Two), Siphons or Jets (Two), Winch Heads or Apparatuses (Two), Light Plants (Two), All Tractors regardless of size (straight tractor only), Fireman on Stationary Boilers, Automatic Elevators, Form Grading Machines, Finishing Machines, Power Sub-Grader or Ribbon Machines, Longitudinal Floats, Distributor Operators on Trucks, Winch Heads or Apparatuses (One), Mobil Track air and heaters (two to five), Heavy Equipment Greaser, Relief Operator, Assistant Master Mechanic and Heavy Duty Mechanic, self-propelled concrete saws of all types and sizes with their attachments, gob-hoppers, excavators all sizes, the repair and greasing of all diesel hammers, the operation and set-up of bidwells, water blasters of all sizes and their clutches, hydraulic jacks where used for hoisting, operation of log skidders, iceolators used on and off of pipeline, condor cranes, bow boats, survey boats, bobcats and all their attachments, skid steer loaders and all their attachments, creter cranes, batch plants, operator (all sizes), self propelled roto mills, operation of conveyor systems of any size and any configuration, operation, repair and service of all vibratory hammers, all power pacs and their controls regardless of location, curtains or brush burning machines, stump cutter machines, Nail launchers when mounted on a machine or self-propelled, operation of con-cover machines, and all Operators (except those listed below).

GROUP II. Assistant Operators.

GROUP III. Air Compressors (One), Water Pumps, regardless of Size (One), Waterblasters (one), Welding Machine (One), Mixers (One Bag), Conveyor (One), Siphon or Jet (One), Light Plant (One), Heater (One), Immobile Track Air (One), and Self Propelled Walk-Behind Rollers.

GROUP IV. Asphalt Spreader Oilers, Fireman on Whirlies and Heavy Equipment Oilers, Truck Cranes, Dredges, Monigans, Large Cranes - (Over 65-ton rated capacity) Concrete Plant Oiler, Blacktop Plant Oiler, and Creter Crane Oiler (when required).

GROUP V. Oiler.

GROUP VI. Operators on equipment with Booms, including jibs, 100 feet and over, and less than 150 feet long.

GROUP VII. Operators on equipment with Booms, including jibs, 150 feet and over, and less than 200 feet long.

GROUP VIII. Operators on Equipment with Booms, including jibs, 200 feet and over; Tower Cranes; and Whirlie Cranes.

GROUP IX. Mechanic

TRUCK DRIVER - BUILDING, HEAVY AND HIGHWAY CONSTRUCTION Class 1. Drivers on 2 axle trucks hauling less than 9 ton. Air compressor and welding machines and brooms, including those pulled by separate units, truck driver helpers, warehouse employees, mechanic helpers, greasers and tiremen, pickup trucks when hauling materials, tools, or workers to and from and on-the-job site, and fork lifts up to 6,000 lb. capacity.

Class 2. Two or three axle trucks hauling more than 9 ton but hauling less than 16 ton. A-frame winch trucks, hydrolift trucks, vactor trucks or similar equipment when used for transportation purposes. Fork lifts over 6,000 lb. capacity, winch trucks, four axle combination units, and ticket writers.

Class 3. Two, three or four axle trucks hauling 16 ton or more. Drivers on water pulls, articulated dump trucks, mechanics and working forepersons, and dispatchers. Five axle or more combination units.

Class 4. Low Boy and Oil Distributors.

Class 5. Drivers who require special protective clothing while employed on hazardous waste work. TRUCK DRIVER - OIL AND CHIP RESEALING ONLY.

This shall encompass laborers, workers and mechanics who drive contractor or subcontractor owned, leased, or hired pickup, dump, service, or oil distributor trucks. The work includes transporting materials and equipment (including but not limited to, oils, aggregate supplies, parts, machinery and tools) to or from the job site; distributing oil or liquid asphalt and aggregate; stock

piling material when in connection with the actul oil and chip contract. The Truck Driver (Oil & Chip Resealing) wage classification does not include supplier delivered materials.

TERRAZZO FINISHER

The handling of all materials used for Mosaic and Terrazzo work including preparing, mixing by hand, by mixing machine or transporting of pre-mixed materials and distributing with shovel, rake, hoe, or pail, all kinds of concrete foundations necessary for Mosaic and Terrazzo work, all cement terrazzo, magnesite terrazzo, Do-O-Tex terrazzo, epoxy matrix ter-razzo, exposed aggregate, rustic or rough washed for exterior or interior of buildings placed either by machine or by hand, and any other kind of mixture of plastics composed of chips or granules when mixed with cement, rubber, neoprene, vinyl, magnesium chloride or any other resinous or chemical substances used for seamless flooring systems, and all other building materials, all similar materials and all precast terrazzo work on jobs, all scratch coat used for Mosaic and Terrazzo work and sub-bed, tar paper and wire mesh (2x2 etc.) or lath. The rubbing, grinding, cleaning and finishing of same either by hand or by machine or by terrazzo resurfacing equipment on new or existing floors. When necessary finishers shall be allowed to assist the mechanics to spread sand bed, lay tarpaper and wire mesh (2x2 etc.) or lath. The finishing of cement floors where additional aggregate of stone is added by spreading or sprinkling on top of the finished base, and troweled or rolled into the finish and then the surface is ground by grinding machines.

Other Classifications of Work:

For definitions of classifications not otherwise set out, the Department generally has on file such definitions which are available. If a task to be performed is not subject to one of the classifications of pay set out, the Department will upon being contacted state which neighboring county has such a classification and provide such rate, such rate being deemed to exist by reference in this document. If no neighboring county rate applies to the task, the Department shall undertake a special determination, such special determination being then deemed to have existed under this determination. If a project requires these, or any classification not listed, please contact IDOL at 217-782-1710 for wage rates or clarifications.

LANDSCAPING

Landscaping work falls under the existing classifications for laborer, operating engineer and truck driver. The work performed by landscape plantsman and landscape laborer is covered by the existing classification of laborer. The work performed by landscape operators (regardless of equipment used or its size) is covered by the classifications of operating engineer. The work performed by landscape truck drivers (regardless of size of truck driven) is covered by the classifications of truck driver.

- On August 7, 2018, IDOL published changes to the HT/Frost Insulator classification in Alexander County, the Sheetmetal Worker classification in Alexander, Bond, Clay, Clinton, Crawford, Edwards, Effingham, Fayette, Franklin, Gallatin, Greene, Hamilton, Hardin, Jackson, Jasper, Jefferson, Jersey, Johnson, Lawrence, Macoupin, Madison, Marion, Massac, Monroe, Montgomery, Perry, Pope, Pulaski, Randolph, Saline, St. Clair, Union, Wabash, Washington, Wayne, White, and Williamson Counties, and the Iron Worker trade in Richland County.

CONSTRUCTION CONTRACTORS
AFFIRMATIVE ACTION REQUIREMENTS
GOALS (%) FOR MINORITY AND WOMEN PARTICIPATION
As Published in the Friday, October 3, 1980 Federal Register

Goals for Participation of Women (Entire State) 6.9

Goals for Minority Participation:

Adams	**3.1**	**Edgar**	**4.8**	**Johnson**	**11.4**	**Menard**	**4.5**	**Shelby**	**4.0**
Alexander	**11.4**	**Edwards**	**3.5**	**Kane**	**19.6**	**Mercer**	**3.4**	**Stark**	**3.3**
Bond	**11.4**	**Effingham**	**11.4**	**Kankakee**	**9.1**	**Monroe**	**14.7**	**St. Clair**	**14.7**
Boone	**6.3**	**Fayette**	**11.4**	**Kendall**	**18.4**	**Montgomery**	**11.4**	**Stephenson**	**4.6**
Brown	**3.1**	**Ford**	**4.8**	**Knox**	**3.3**	**Morgan**	**4.0**	**Tazewell**	**4.4**
Bureau	**18.4**	**Franklin**	**11.4**	**Lake**	**19.6**	**Moultrie**	**4.0**	**Union**	**11.4**
Calhoun	**11.4**	**Fulton**	**3.3**	**LaSalle**	**18.4**	**Ogle**	**4.6**	**Vermilion**	**4.8**
Carroll	**3.4**	**Gallatin**	**3.5**	**Lawrence**	**3.5**	**Peoria**	**4.4**	**Wabash**	**3.5**
Cass	**4.0**	**Greene**	**11.4**	**Lee**	**4.6**	**Perry**	**11.4**	**Warren**	**3.3**
Champaign	**7.8**	**Grundy**	**18.4**	**Livingston**	**18.4**	**Piatt**	**4.8**	**Washington**	**11.4**
Clark	**2.5**	**Hamilton**	**3.5**	**Logan**	**4.0**	**Pike**	**3.1**	**Wayne**	**11.4**
Clay	**11.4**	**Hancock**	**3.4**	**Macon**	**7.6**	**Pope**	**5.2**	**White**	**3.5**
Clinton	**14.7**	**Hardin**	**5.2**	**Macoupin**	**11.4**	**Pulaski**	**11.4**	**Whiteside**	**3.4**
Coles	**4.8**	**Henderson**	**3.4**	**Madison**	**14.7**	**Putnam**	**18.4**	**Will**	**20.9**
Cook	**19.6**	**Henry**	**4.6**	**Marion**	**11.4**	**Randolph**	**11.4**	**Williamson**	**11.4**
Crawford	**2.5**	**Iroquois**	**18.4**	**Marshall**	**3.3**	**Richland**	**11.4**	**Winnebago**	**6.3**
Cumberland	**4.8**	**Jackson**	**11.4**	**Mason**	**3.3**	**Rock Island**	**4.6**	**Woodford**	**4.4**
DeKalb	**18.4**	**Jasper**	**11.4**	**Massac**	**5.2**	**Saline**	**3.5**		
DeWitt	**4.0**	**Jefferson**	**11.4**	**McDonough**	**3.3**	**Sangamon**	**4.5**		
Douglas	**4.8**	**Jersey**	**11.4**	**McHenry**	**19.6**	**Schuyler**	**3.3**		
DuPage	**19.6**	**JoDaviess**	**0.5**	**McLean**	**2.5**	**Scott**	**4.0**		

(10-22-97) PN 152

o O o

Intentionally Blank

USDA Rural Development Construction Sign

In accordance with attached Exhibit A, the Contractor on Contract A of the project shall each erect one sign at a prominent location on the project when construction begins.

The contractor will remove the temporary construction sign(s) when all construction has been completed.

o O o

TEMPORARY CONSTRUCTION SIGN FOR RURAL DEVELOPMENT PROJECTS

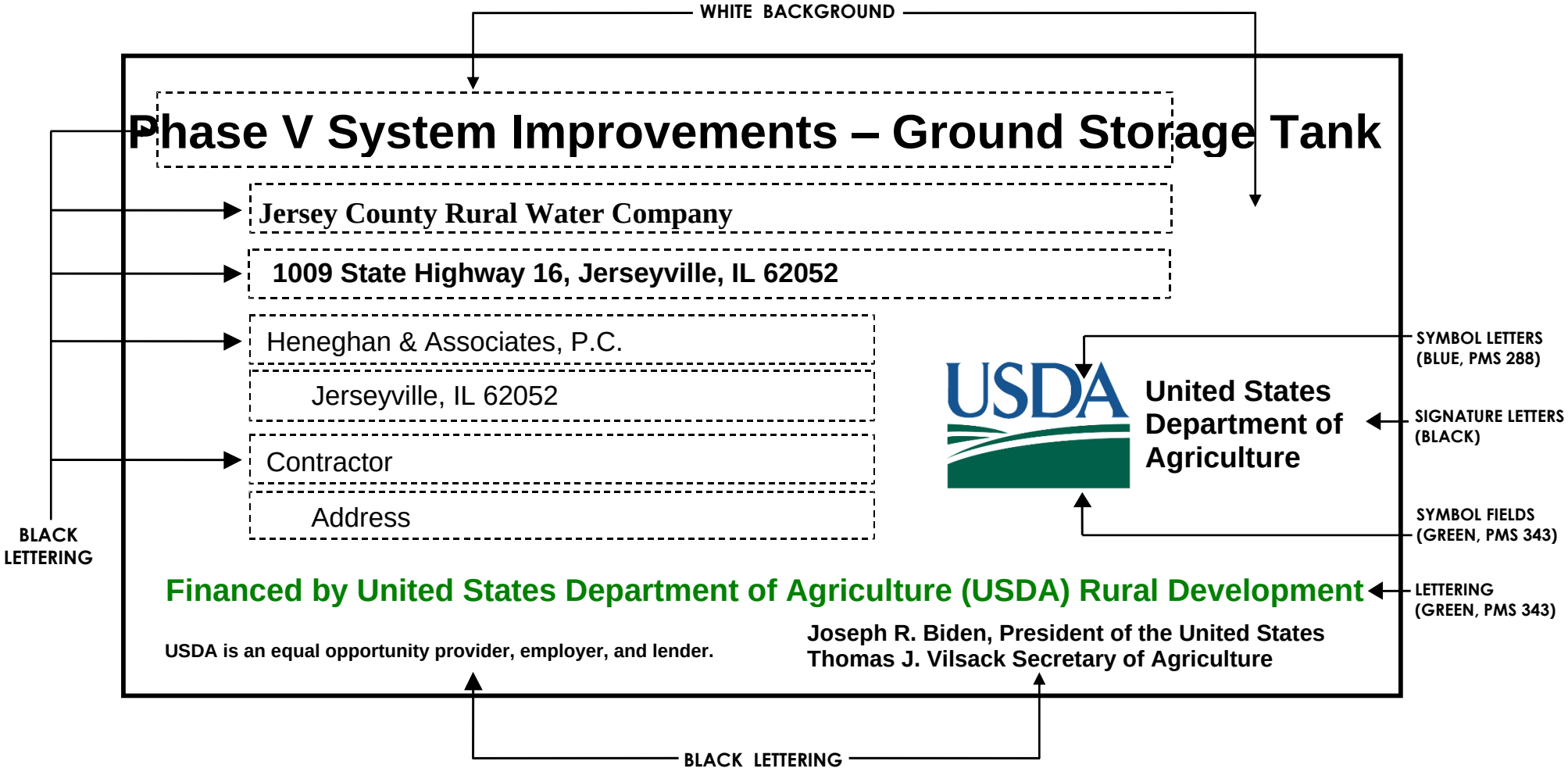

SIGN DIMENSIONS: **1200 mm x 2400 mm x 19 mm (approx. 4' x 8' x ¾")**
PLYWOOD PANEL (APA RATED A-B GRADE–EXTERIOR)

www.rurdev.usda.gov/IL_engineering.html

EJCDC
ENGINEERS JOINT CONTRACT DOCUMENTS COMMITTEE

Contractor's Application for Payment No.

	Application Period:	Application Date:
To (Owner):	From (Contractor):	Via (Engineer):
Project:	Contract:	
Owner's Contract No.:	Contractor's Project No.:	Engineer's Project No.:

Application For Payment

Change Order Summary

Approved Change Orders		
Number	Additions	Deductions
TOTALS		
NET CHANGE BY CHANGE ORDERS		

1. ORIGINAL CONTRACT PRICE	**$**
2. Net change by Change Orders	**$**
3. Current Contract Price (Line 1 ± 2)	**$**
4. TOTAL COMPLETED AND STORED TO DATE (Column F total on Progress Estimates)	**$**
5. RETAINAGE:	
a. X _____ Work Completed	**$**
b. X _____ Stored Material	**$**
c. Total Retainage (Line 5.a + Line 5.b)	**$**
6. AMOUNT ELIGIBLE TO DATE (Line 4 - Line 5.c)	**$**
7. LESS PREVIOUS PAYMENTS (Line 6 from prior Application)	**$**
8. AMOUNT DUE THIS APPLICATION	**$**
9. BALANCE TO FINISH, PLUS RETAINAGE (Column G total on Progress Estimates + Line 5.c above)	**$**

Contractor's Certification

The undersigned Contractor certifies, to the best of its knowledge, the following:
(1) All previous progress payments received from Owner on account of Work done under the Contract have been applied on account to discharge Contractor's legitimate obligations incurred in connection with the Work covered by prior Applications for Payment;
(2) Title to all Work, materials and equipment incorporated in said Work, or otherwise listed in or covered by this Application for Payment, will pass to Owner at time of payment free and clear of all Liens, security interests, and encumbrances (except such as are covered by a bond acceptable to Owner indemnifying Owner against any such Liens, security interest, or encumbrances); and
(3) All the Work covered by this Application for Payment is in accordance with the Contract Documents and is not defective.

Contractor Signature

By:	Date:

Payment of: $ _____
(Line 8 or other - attach explanation of the other amount)

is recommended by: _____ _____
(Engineer) (Date)

Payment of: $ _____
(Line 8 or other - attach explanation of the other amount)

is approved by: _____ _____
(Owner) (Date)

Approved by: _____ _____
Funding or Financing Entity (if applicable) (Date)

© 2013 National Society of Professional Engineers for EJCDC. All rights reserved.

Progress Estimate - Unit Price Work

Contractor's Application

For (Contract):								Application Number:			
Application Period:								Application Date:			
A					B	C	D	E	F		
Item		Contract Information				Estimated Quantity Installed	Value of Work Installed to Date	Materials Presently Stored (not in C)	Total Completed and Stored to Date (D + E)	% (F / B)	Balance to Finish (B - F)
Bid Item No.	Description	Item Quantity	Units	Unit Price	Total Value of Item ($)						
	Totals										

© 2013 National Society of Professional Engineers for EJCDC. All rights reserved.

Stored Material Summary

Contractor's Application

For (Contract):								Application Number:			
Application Period:								Application Date:			
A		B	C		D		E		F		G
Bid Item No.	Supplier Invoice No.	Submittal No. (with Specification Section No.)	Storage Location	Description of Materials or Equipment Stored	Stored Previously		Amount Stored this Month ($)	Subtotal Amount Completed and Stored to Date (D + E)	Incorporated in Work		Materials Remaining in Storage ($) (D + E - F)
					Date Placed into Storage (Month/Year)	Amount ($)			Date (Month/ Year)	Amount ($)	
				Totals							

© 2013 National Society of Professional Engineers for EJCDC. All rights reserved.

Intentionally Blank

U.S. Department of Labor
Wage and Hour Division

PAYROLL

(For Contractor's Optional Use; See Instructions at www.dol.gov/whd/forms/wh347instr.htm)

Persons are not required to respond to the collection of information unless it displays a currently valid OMB control number.

U.S. Wage and Hour Division

Rev. Dec. 2008

OMB No.: 1235-0008
Expires: 01/31/2015

NAME OF CONTRACTOR ☐ OR SUBCONTRACTOR ☐	ADDRESS	
PAYROLL NO.	FOR WEEK ENDING	PROJECT AND LOCATION / PROJECT OR CONTRACT NO.

(1) NAME AND INDIVIDUAL IDENTIFYING NUMBER (e.g., LAST FOUR DIGITS OF SOCIAL SECURITY NUMBER) OF WORKER	(2) NO. OF WITHHOLDING EXEMPTIONS	(3) WORK CLASSIFICATION	OT. OR ST.	(4) DAY AND DATE / HOURS WORKED EACH DAY	(5) TOTAL HOURS	(6) RATE OF PAY	(7) GROSS AMOUNT EARNED	(8) DEDUCTIONS: FICA	WITH-HOLDING TAX			OTHER	TOTAL DEDUCTIONS	(9) NET WAGES PAID FOR WEEK
			O											
			S											
			O											
			S											
			O											
			S											
			O											
			S											
			O											
			S											
			O											
			S											
			O											
			S											
			O											
			S											

While completion of Form WH-347 is optional, it is mandatory for covered contractors and subcontractors performing work on Federally financed or assisted construction contracts to respond to the information collection contained in 29 C.F.R. §§ 3.3, 5.5(a). The Copeland Act (40 U.S.C. § 3145) contractors and subcontractors performing work on Federally financed or assisted construction contracts to "furnish weekly a statement with respect to the wages paid each employee during the preceding week." U.S. Department of Labor (DOL) regulations at 29 C.F.R. § 5.5(a)(3)(ii) require contractors to submit weekly a copy of all payrolls to the Federal agency contracting for or financing the construction project, accompanied by a signed "Statement of Compliance" indicating that the payrolls are correct and complete and that each laborer or mechanic has been paid not less than the proper Davis-Bacon prevailing wage rate for the work performed. DOL and federal contracting agencies receiving this information review the information to determine that employees have received legally required wages and fringe benefits.

Public Burden Statement

We estimate that is will take an average of 55 minutes to complete this collection, including time for reviewing instructions, searching existing data sources, gathering and maintaining the data needed, and completing and reviewing the collection of information. If you have any comments regarding these estimates or any other aspect of this collection, including suggestions for reducing this burden, send them to the Administrator, Wage and Hour Division, U.S. Department of Labor, Room S3502, 200 Constitution Avenue, N.W. Washington, D.C. 20210

(over)

Date _____

I, _____ _____
(Name of Signatory Party) (Title)

do hereby state:

(1) That I pay or supervise the payment of the persons employed by

_____ on the
(Contractor or Subcontractor)

_____; that during the payroll period commencing on the
(Building or Work)

_____ day of _____, _____, and ending the _____ day of _____, _____,

all persons employed on said project have been paid the full weekly wages earned, that no rebates have been or will be made either directly or indirectly to or on behalf of said

_____ from the full
(Contractor or Subcontractor)

weekly wages earned by any person and that no deductions have been made either directly or indirectly from the full wages earned by any person, other than permissible deductions as defined in Regulations, Part 3 (29 C.F.R. Subtitle A), issued by the Secretary of Labor under the Copeland Act, as amended (48 Stat. 948, 63 Start. 108, 72 Stat. 967; 76 Stat. 357; 40 U.S.C. § 3145), and described below:

_____

_____

_____

_____

(2) That any payrolls otherwise under this contract required to be submitted for the above period are correct and complete; that the wage rates for laborers or mechanics contained therein are not less than the applicable wage rates contained in any wage determination incorporated into the contract; that the classifications set forth therein for each laborer or mechanic conform with the work he performed.

(3) That any apprentices employed in the above period are duly registered in a bona fide apprenticeship program registered with a State apprenticeship agency recognized by the Bureau of Apprenticeship and Training, United States Department of Labor, or if no such recognized agency exists in a State, are registered with the Bureau of Apprenticeship and Training, United States Department of Labor.

(4) That:

(a) WHERE FRINGE BENEFITS ARE PAID TO APPROVED PLANS, FUNDS, OR PROGRAMS

☐ – in addition to the basic hourly wage rates paid to each laborer or mechanic listed in the above referenced payroll, payments of fringe benefits as listed in the contract have been or will be made to appropriate programs for the benefit of such employees, except as noted in section 4(c) below.

(b) WHERE FRINGE BENEFITS ARE PAID IN CASH

☐ – Each laborer or mechanic listed in the above referenced payroll has been paid, as indicated on the payroll, an amount not less than the sum of the applicable basic hourly wage rate plus the amount of the required fringe benefits as listed in the contract, except as noted in section 4(c) below.

(c) EXCEPTIONS

EXCEPTION (CRAFT)	EXPLANATION

REMARKS:

NAME AND TITLE	SIGNATURE

THE WILLFUL FALSIFICATION OF ANY OF THE ABOVE STATEMENTS MAY SUBJECT THE CONTRACTOR OR SUBCONTRACTOR TO CIVIL OR CRIMINAL PROSECUTION. SEE SECTION 1001 OF TITLE 18 AND SECTION 231 OF TITLE 31 OF THE UNITED STATES CODE.

PARTIAL WAIVER OF LIEN

To All Whom It May Concern:

WHEREAS, the undersigned has been employed by (A)_____ to furnish labor and materials for (B) _____ ..under a contract (C) _____ for the improvement of the premises described as (D) _____ in the _____ (City-Village) of _____, County of _____, State of _____ of which _____ is the Owner.

NOW, THEREFORE, this _____ day of _____, 20___, for and in consideration of the sum of (E) _____ Dollars ($_____)

paid simultaneously herewith, the receipt whereof is hereby acknowledged by the undersigned, the undersigned does hereby waive and release to the extent only of the aforesaid amount, any lien rights to, or claim of lien with respect to and on said above-described premises, and the improvements thereon, and on the monies or other considerations due or to become due from the owner, by virtue of said contract, on account of labor, services, materials, fixtures, apparatus or machinery furnished by the undersigned to or for the above-described premises, but only to the extent of the payment aforesaid.

(F)_____

(SEAL)

(name of sole ownership, corporation or partnership)

(Affix corporate Seal here)

_____

(SEAL)

(Signature)

TITLE:_____

INSTRUCTIONS FOR PARTIAL WAIVER

(A) Name person or firm with whom you agreed to furnish either labor, or services, or materials, or both.
(B) Fill in nature and extent of work: strike the word labor or the word materials if not in your contract.
(C) If you have more than one contract on the same premises, describe the contract by number, if available, date and extent of work.
(D) Furnish an accurate enough description of the improvement and location of the premises so that it can be distinguished from any other property.
(E) Amount shown should be the amount actually received on that date.
(F) If waiver is for a corporation, corporate name should be used, corporate seal affixed and title of officer signing waiver should be set forth; if waiver is for a partnership, the partnership name should be used, partner should sign and designate himself as partner.

Construction Industry Affairs Committee of Chicago.

Intentionally Blank

FINAL WAIVER OF LIEN

To All Whom It May Concern:

WHEREAS, the undersigned has been employed by (A)_____ to furnish labor and materials for (B) _____ ..under a contract (C) _____ for the improvement of the premises described as (D) _____ in the _____ (City-Village) of _____, County of _____, State of _____ of which _____ is the Owner.

NOW, THEREFORE, this _____ day of _____, 20___, for and in consideration of the sum of (E) _____ Dollars ($_____)

paid simultaneously herewith, the receipt whereof is hereby acknowledged by the undersigned, the undersigned does hereby waive and release any lien rights to, or claim of lien with respect to and on said above-described premises, and the improvements thereon, and on the monies or other considerations due or to become due from the owner, on account of labor, services, materials, fixtures, apparatus or machinery heretofore or which may hereafter be furnished by the undersigned to or for the above-described premises, by virtue of said contract.

(F)_____ (SEAL)
(name of sole ownership, corporation or partnership)

(Affix corporate Seal here)

_____ (SEAL)
(Signature)

TITLE:_____

INSTRUCTIONS FOR FINAL WAIVER

(A) Person or firm with whom you agreed to furnish either labor, or services, or materials, or both.
(B) Fill in nature and extent of work: strike the word labor or the word materials if not in your contract.
(C) If you have more than one contract on the same premises, describe the contract by number, if available, date and extent of work.
(D) Furnish an accurate enough description of the improvement and location of the premises so that it can be distinguished from any other property.
(E) Amount shown should be the amount actually received and equal to total amount of contract as adjusted.
(F) If waiver is for a corporation, corporate name should be used, corporate seal affixed and title of officer signing waiver should be set forth; if waiver is for a partnership, the partnership name should be used, partner should sign and designate himself as partner.

Approved By The
Construction Industry Affairs Committee (CIAC).

Intentionally Blank

EJCDC
ENGINEERS JOINT CONTRACT DOCUMENTS COMMITTEE

CERTIFICATE OF SUBSTANTIAL COMPLETION

Owner:	Jersey County Rural Water Company	Owner's Contract No.:	
Contractor:		Contractor's Project No.:	
Engineer:	Heneghan and Associates, P.C.	Engineer's Project No.:	00139-4100
Project:	Phase V System Improvements Ground Storage Tank	Contract Name: Contract K	

This [preliminary] [final] Certificate of Substantial Completion applies to:

☐ All Work ☐ The following specified portions of the Work:

Date of Substantial Completion

The Work to which this Certificate applies has been inspected by authorized representatives of Owner, Contractor, and Engineer, and found to be substantially complete. The Date of Substantial Completion of the Work or portion thereof designated above is hereby established, subject to the provisions of the Contract pertaining to Substantial Completion. The date of Substantial Completion in the final Certificate of Substantial Completion marks the commencement of the contractual correction period and applicable warranties required by the Contract.

A punch list of items to be completed or corrected is attached to this Certificate. This list may not be all-inclusive, and the failure to include any items on such list does not alter the responsibility of the Contractor to complete all Work in accordance with the Contract.

The responsibilities between Owner and Contractor for security, operation, safety, maintenance, heat, utilities, insurance, and warranties upon Owner's use or occupancy of the Work shall be as provided in the Contract, except as amended as follows: *[Note: Amendments of contractual responsibilities recorded in this Certificate should be the product of mutual agreement of Owner and Contractor; see Paragraph 15.03.D of the General Conditions.]*

Amendments to Owner's responsibilities: ☐ None ☐ As follows

Amendments to Contractor's responsibilities: ☐ None ☐ As follows:

The following documents are attached to and made a part of this Certificate: *[punch list; others]*

This Certificate does not constitute an acceptance of Work not in accordance with the Contract Documents, nor is it a release of Contractor's obligation to complete the Work in accordance with the Contract.

EXECUTED BY ENGINEER:	RECEIVED:	RECEIVED:
By: _____ (Authorized signature)	By: _____ Owner (Authorized Signature)	By: _____ Contractor (Authorized Signature)
Title: _____	Title: _____	Title: _____
Date: _____	Date: _____	Date: _____

Intentionally Blank

EJCDC
ENGINEERS JOINT CONTRACT DOCUMENTS COMMITTEE

Work Change Directive No.

Date of Issuance:	Effective Date:
Owner:	Owner's Contract No.:
Contractor:	Contractor's Project No.:
Engineer:	Engineer's Project No.:
Project:	Contract Name:

Contractor is directed to proceed promptly with the following change(s):

Description:

Attachments: *[List documents supporting change]*

Purpose for Work Change Directive:

Directive to proceed promptly with the Work described herein, prior to agreeing to changes on Contract Price and Contract Time, is issued due to: *[check one or both of the following]*

☐ Non-agreement on pricing of proposed change.

☐ Necessity to proceed for schedule or other Project reasons.

Estimated Change in Contract Price and Contract Times (non-binding, preliminary):

Contract Price $ [increase] [decrease].

Contract Time days [increase] [decrease].

Basis of estimated change in Contract Price:

☐ Lump Sum ☐ Unit Price

☐ Cost of the Work ☐ Other

RECOMMENDED:	AUTHORIZED BY:	RECEIVED:
By:	By:	By:
Engineer (Authorized Signature)	Owner (Authorized Signature)	Contractor (Authorized Signature)
Title:	Title:	Title:
Date:	Date:	Date:

Approved by Funding Agency (if applicable)

By: Date:

Title:

Intentionally Blank

EJCDC
ENGINEERS JOINT CONTRACT DOCUMENTS COMMITTEE

Change Order No. _____

Date of Issuance:		Effective Date:	
Owner:	Jersey County Rural Water Company	Owner's Contract No.:	
Contractor:		Contractor's Project No.:	
Engineer:	Heneghan and Associates, P.C.	Engineer's Project No.:	00139-4100
Project:	Phase V System Improvements Ground Storage Tank	Contract Name: Contract K	

The Contract is modified as follows upon execution of this Change Order:

Description:

Attachments: *[List documents supporting change]*

CHANGE IN CONTRACT PRICE	**CHANGE IN CONTRACT TIMES** *[note changes in Milestones if applicable]*
Original Contract Price: $_____	Original Contract Times: Substantial Completion: _____ Ready for Final Payment: _____ days or dates
[Increase] [Decrease] from previously approved Change Orders No. ___ to No. ___: $_____	[Increase] [Decrease] from previously approved Change Orders No. ___ to No. ___: Substantial Completion: _____ Ready for Final Payment: _____ days
Contract Price prior to this Change Order: $_____	Contract Times prior to this Change Order: Substantial Completion: _____ Ready for Final Payment: _____ days or dates
[Increase] [Decrease] of this Change Order: $_____	[Increase] [Decrease] of this Change Order: Substantial Completion: _____ Ready for Final Payment: _____ days or dates
Contract Price incorporating this Change Order: $_____	Contract Times with all approved Change Orders: Substantial Completion: _____ Ready for Final Payment: _____ days or dates

RECOMMENDED:	ACCEPTED:	ACCEPTED:
By: _____	By: _____	By: _____
Engineer (if required)	Owner (Authorized Signature)	Contractor (Authorized Signature)
Title: _____	Title _____	Title _____
Date: _____	Date _____	Date _____

Approved by Funding Agency (if applicable)

By: _____ Date:

Title: _____

Intentionally Blank

EJCDC
ENGINEERS JOINT CONTRACT DOCUMENTS COMMITTEE

Field Order No. _____

Date of Issuance:	Effective Date:
Owner:	Owner's Contract No.:
Contractor:	Contractor's Project No.:
Engineer:	Engineer's Project No.:
Project:	Contract Name:

Contractor is hereby directed to promptly execute this Field Order, issued in accordance with General Conditions Paragraph 11.01, for minor changes in the Work without changes in Contract Price or Contract Times. If Contractor considers that a change in Contract Price or Contract Times is required, submit a Change Proposal before proceeding with this Work.

Reference: _____ Specification(s) _____ Drawing(s) / Detail(s)

Description:

Attachments:

ISSUED:	RECEIVED:
By: _____ Engineer (Authorized Signature)	By: _____ Contractor (Authorized Signature)
Title: _____	Title: _____
Date: _____	Date: _____

Copy to: Owner

Intentionally Blank

GENERAL (PRIME) CONTRACTOR'S CERTIFICATION OF COMPLIANCE WITH PROVISIONS OF THE AMERICAN IRON AND STEEL REQUIREMENTS OF SECTION 746 OF TITLE VII OF THE CONSOLIDATED APPROPRIATIONS ACT OF 2017 (DIVISION A - AGRICULTURE, RURAL DEVELOPMENT, FOOD AND DRUG ADMINISTRATION, AND RELATED AGENCIES APPROPRIATIONS ACT, 2017) AND SUBSEQUENT STATUTES MANDATING DOMESTIC PREFERENCE

DATE:

RE: Phase V System Improvements Ground Storage Tank
Jersey County Rural Water Company
00139-4100

I hereby certify that to the best of my knowledge and belief all iron and steel products installed for this project by my company and by any and all subcontractors and manufacturers my company has contracted with for this project comply with Section 746 of Title VII of the Consolidated Appropriations Act of 2017 (Division A - Agriculture, Rural Development, Food and Drug Administration, and Related Agencies Appropriations Act, 2017) and subsequent statutes mandating domestic preference or are the subject of a waiver approved by the Secretary of Agriculture or designee.

This certification is to be submitted upon completion of the project to the project engineer.

_____
Name of Construction Company (PRINT)

_____
By Authorized Representative (SIGNATURE)

_____
Title

Intentionally Blank

EXAMPLE OF A MANUFACTURER'S CERTIFICATION LETTER OF COMPLIANCE WITH PROVISIONS OF THE AMERICAN IRON AND STEEL (AIS) REQUIREMENTS OF SECTION 746 OF TITLE VII OF THE CONSOLIDATED APPROPRIATIONS ACT OF 2017 (DIVISION A - AGRICULTURE, RURAL DEVELOPMENT, FOOD AND DRUG ADMINISTRATION, AND RELATED AGENCIES APPROPRIATIONS ACT, 2017) AND SUBSEQUENT STATUTES MANDATING DOMESTIC PREFERENCE

Date:

Company Name:

Company Address:

Subject: AIS Step Certification for Project (X), Owner's Name, and Contract Number

I, (company representative), certify that the (melting, bending, galvanizing, cutting, etc.) processes for (manufacturing or fabricating) the following products and/or material shipped or provided for the subject project is in full compliance with the AIS requirement as mandated by Section 746 of Title VII of the Consolidated Appropriations Act of 2017 (Division A - Agriculture, Rural Development, Food and Drug Administration, and Related Agencies Appropriations Act, 2017) and subsequent statutes mandating domestic preference.

Item, Products and/or Materials, and location of delivery (City, State):

1.
2.

Such processes for AIS took place at the following location:

_____
(City, State)

This certification is to be submitted upon request to interested parties (e.g. municipalities, consulting engineers, general contractors, etc.)

If any of the above compliance statements change while providing materials to this project, please immediately notify the person(s) who is requesting to use your product(s).

_____
Authorized Company Representative Signature
(Note: *Authorized signature shall be manufacturer's representative not the material distributor or supplier*)

Intentionally Blank

EXAMPLES OF MUNICIPAL CASTINGS (*includes but not limited to*):

Access Hatches;
Ballast Screen;
Benches (Iron or Steel);
Bollards;
Cast Bases;
Cast Iron Hinged Hatches, Square and Rectangular;
Cast Iron Riser Rings;
Catch Basin Inlet;
Cleanout/Monument Boxes;
Construction Covers and Frames;
Curb and Corner Guards;
Curb Openings;
Detectable Warning Plates;
Downspout Shoes (Boot, Inlet);
Drainage Grates, Frames and Curb Inlets;
Inlets;
Junction Boxes;
Lampposts;
Manhole Covers, Rings and Frames, Risers;
Meter Boxes;
Service Boxes;
Steel Hinged Hatches, Square and Rectangular;
Steel Riser Rings;
Trash receptacles;
Tree Grates;
Tree Guards;
Trench Grates; and
Valve Boxes, Covers and Risers.

Intentionally Blank

EXAMPLES OF CONSTRUCTION MATERIALS (*includes but not limited to*):

Wire rod, bar, angles
Concrete reinforcing bar, wire, wire cloth
Wire rope and cables
Tubing
Framing
Joists
Trusses
Fasteners (i.e., nuts and bolts)
Welding rods
Decking
Grating
Railings
Stairs
Access ramps
Fire escapes
Ladders
Wall panels
Dome structures
Roofing
Ductwork
Surface drains
Cable hanging systems
Manhole steps
Fencing and fence tubing
Guardrails
Doors
Stationary screens

Intentionally Blank

EXAMPLES OF NON-CONSTRUCTION MATERIALS – (*includes but not limited to*):
(NOTE: *includes appurtenances necessary for their intended use and operation and are not subject to AIS*)

Pumps
Motors
Gear reducers
Drives (including variable frequency drives (VFDs)
Electric/pneumatic/manual accessories used to operate valves (such as electric valve actuators)
Mixers
Gates (e.g. sluice and slide gates)
Motorized screens (such as traveling screens)
Blowers/aeration equipment
Compressors
Meters (flow and water meters)
Sensors
Controls and switches
Supervisory control Data acquisition (SCADA)
Membrane bioreactor systems
Membrane filtration systems (includes RO package plants)
Filters
Clarifier arms and clarifier mechanisms
Rakes
Grinders
Disinfection systems
Presses (including belt presses)
Conveyors
Cranes
HVAC (excluding ductwork
Water heaters
Heat exchangers
Generators
Cabinetry and housings (such as electrical boxes/enclosures)
Lighting fixtures
Electrical conduit
Emergency life systems
Metal office furniture
Shelving
Laboratory equipment
Analytical instrumentation
Dewatering equipment.

Intentionally Blank

WATER AND SEWER LINE
CONSTRUCTION STANDARDS AND POLICIES

Established by the
ILLINOIS DEPARTMENT OF AGRICULTURE

The following standards and policies will serve to minimize the negative agricultural impacts that may result due to water and sewer line construction.

The standards and policies only apply to construction activities occurring partially or wholly on privately owned agricultural land. They do not apply to construction activities occurring on highway or railroad right-of-way, or on publicly owned land. The only exceptions are the construction standards relating to the repair of drainage tile (Item No. 3). The tile line construction standards shall be implemented regardless of where drainage tile is encountered.

Conditions

The mitigative actions specified in the construction standards and policies will be implemented in accordance with the conditions listed below:

A. All mitigative actions are subject to change by landowners, provided such changes are acceptable to the Project Sponsor.

B. The Project Sponsor may negotiate with landowners to carry out the mitigative actions that landowners wish to perform themselves. The landowners will receive the area commercial rate for their labor and machinery costs.

C. All mitigative actions, unless otherwise specified, will be implemented within 45 days of completion of water or sewer line facilities on any affected property, weather and landowner permitting. Temporary repairs will be made by the Project Sponsor during the construction process as needed to minimize the risk of additional property damage that may result from an extended construction time period.

D. All mitigative actions will extend to associated future construction, maintenance, and repairs.

E. The Project Sponsor will provide a copy of the Water and Sewer Line Construction Standards and Policies to all owners of agricultural land that will be impacted by water and/or sewer line construction, and will do at the time of easement contract negotiations.

Definitions

Project Sponsor - Entity proposing the construction of water or sewer lines and their related appurtenances.

Agricultural land - Land used for cropland, pastureland, managed woodlands, truck gardens, orchards, nurseries, and other related agricultural enterprises dependent upon soil integrity.

Cropland - Land used for growing row crops, small grains, or hay; includes land which was formerly used as cropland, but is currently in a government set-aside or conservation reserve program.

Water or Sewer Line - Includes water transmission and distribution lines, sewer trunk lines, sewer gravity flow lines, interceptors, or force mains and any related appurtenances.

Landowner - Person(s) responsible for making decisions regarding the restoration of the land adversely impacted by a water or sewer line.

Prime Farmland - Agricultural land comprised of soils that are defined by the USDA Natural Resources Conservation Service as being "Prime" soils (generally considered the most productive soils with the least input of nutrients and management).

Right-of-Way - Includes the permanent and temporary easements that the Project Sponsor acquires for the purpose of constructing water or sewer lines across privately owned land.

WATER AND SEWER LINE CONSTRUCTION STANDARDS AND POLICIES

1. Water and Sewer Line Depth

A. All water and sewer lines which are placed in trenches 24 inches in width or less will be buried with a minimum of 42 inches **(60 inches are suggested by the Illinois Department of Agriculture)** of top cover where they cross cropland.

B. All water and sewer lines that are placed in trenches greater than 24 inches in width will be buried with 60 inches of topcover where they cross cropland.

C. In terrain where bedrock prevents the placement of any water or sewer lines at the depths specified in 1.A. or 1.B. above, the water or sewer lines will be buried as deep as is practicable and feasible.

2. Topsoil Replacement

The following standards apply only when water and sewer lines are buried in trenches that are greater than 24 inches wide.

A. The actual depth of the topsoil, will first be stripped from the area to be excavated for a water or sewer line trench, all bore pits, and other areas of excavation.

B. All subsoil material that is removed from the trench will be placed in a second stockpile that is separate from the topsoil stockpile.

C. In backfilling the trench and other excavated areas, the stockpiled subsoil material will be placed back into the trench first. The topsoil will be replaced last so that it remains the top layer of soil.

D. The topsoil and subsoil must be replaced within the trench and other excavated area so that after settling occurs, the land's original contour (with an allowance for settling) will be achieved.

E. The subsoil displaced by the water or sewer line must be hauled off the landowner's premises or disposed of on the landowner's premises at a location that is acceptable to the landowner.

3. Repair Of Damaged Tile Lines

If underground drainage tile is damaged by water or sewer line construction, it must be repaired in a manner that assures the tile line's proper operation at the point of repair. The following standards and policies shall apply to the tile line repairs.

A. The Project Sponsor will endeavor to locate all tile lines prior to water or sewer line construction so repairs can be made if necessary. The Project Sponsor will contact affected landowners/tenants for their knowledge of tile line locations prior to any water or sewer line construction. All identified tile lines will be flagged to alert construction crews to the possible need for tile line repairs.

B. All tile lines shall be repaired with materials of the same or better quality as that which was damaged.

C. All damaged tile lines shall be immediately and temporarily repaired until such time that permanent repairs can be made.

D. Where tile lines are severed by water or sewer line trenches, non-compactable support must be added around the repaired tile lines in accordance with the attached detail drawings.

1. Within the trench, maximum rock size shall be 1 1/2 inch river gravel or 1 inch crushed stone for backfill under all tile lines.

2. There must be a minimum of one foot of separation between a tile line and the water or sewer line whether the line passes over or under the tile line.

3. In no instance will the grade of a tile line be changed.

E. Heavy construction equipment working within a water or sewer line right-of-way may crush shallow drainage tile. All tile lines intersecting the water or sewer line trench will be probed laterally for their entire length within the water or sewer line right-of-way to check for damaged tile. Probing must occur immediately prior to the permanent repair of any severed tile lines. If tile lines are found to be damaged, they must be repaired so they operate as well after construction as before construction began, and in a manner that is acceptable to the landowner.

F. All permanent tile line repairs must be made within 14 days of the date the damage occurred, weather and landowner permitting. If the landowner elects to make his/her own tile repairs, such damage payments will be negotiated with the Project Sponsor and must also be made within 14 days of the date of the completed repair work.

G. The Project Sponsor will remain liable for a period of three (3) years following the completion of the water or sewer lines to ensure that all tile line repairs do not fail. The Project Sponsor will not be responsible for tile line repairs that the Project Sponsor pays the landowner to perform.

FIELD TILE REPAIR

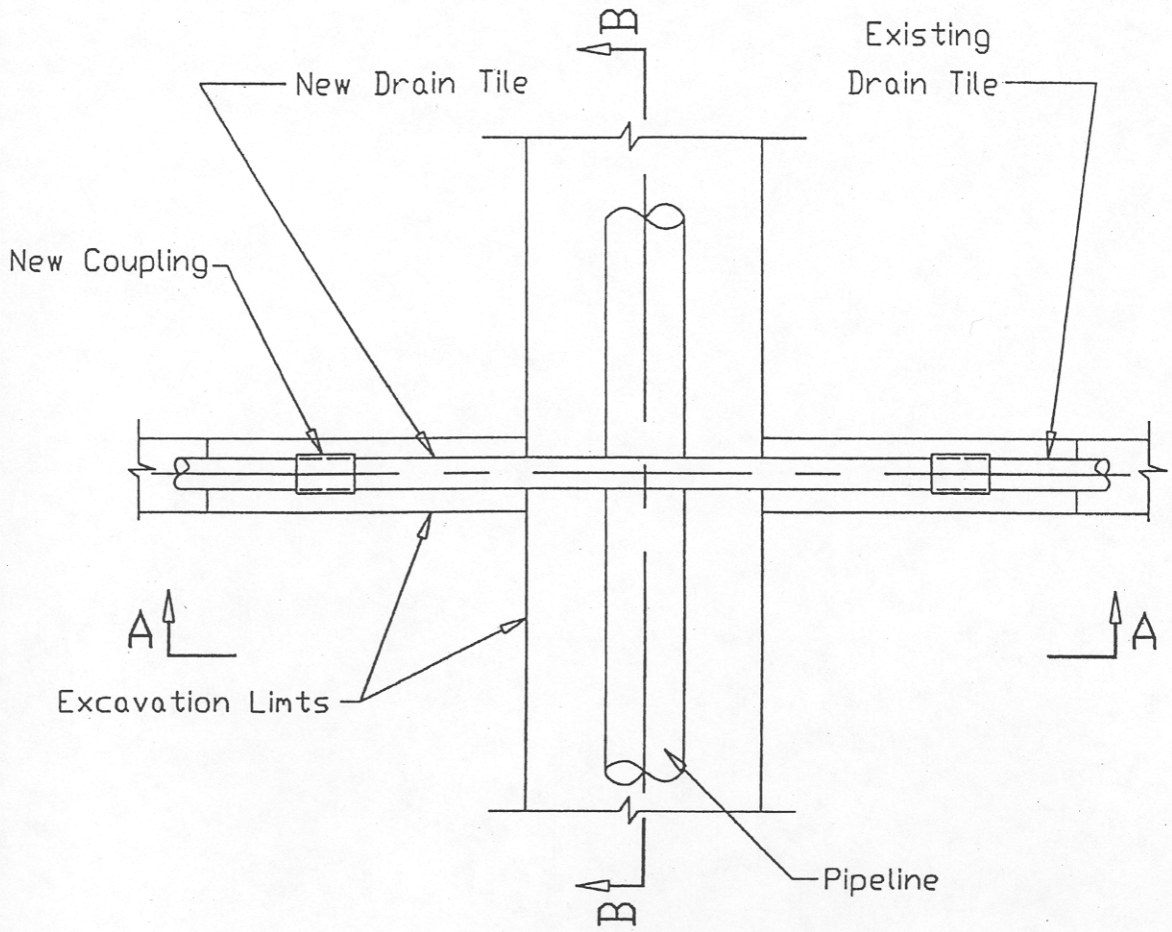

EXCAVATION PLAN

NOTES:

1. Coarse aggregate shall be gravel, crushed gravel, pit run gravel or crushed stone and shall conform to the requirements of IDOT Standard Specification for Road and Bridge Construction Article 1004.01 and CA-18 gradation.
2. Geotextile may be woven or non-woven and shall conform to the requirements of Class 1 in the attached table 1 or 2. In addition, when pipleline trench depth exceeds 10 feet, puncture strength (ASTM D 483) shall be 150 lbs or greater.
3. New tile should be equal to or better than existing tile. Dual Wall polyethylene tubing conforming to ASHTO M-252 or M-294 may be used where existing tile is rigid conduit (clay or concrete).

AUTOCAD2000

REFERENCE Project _____ Designed _____ Date _____ Checked _____ Date _____ Approved _____ Date _____	USDA NATURAL RESOURCES CONSERVATION SERVICE ILLINOIS	STANDARD DWG. NO. IL-ENG-150A SHEET 1 OF 2 DATE: 12/98

FIELD TILE REPAIR

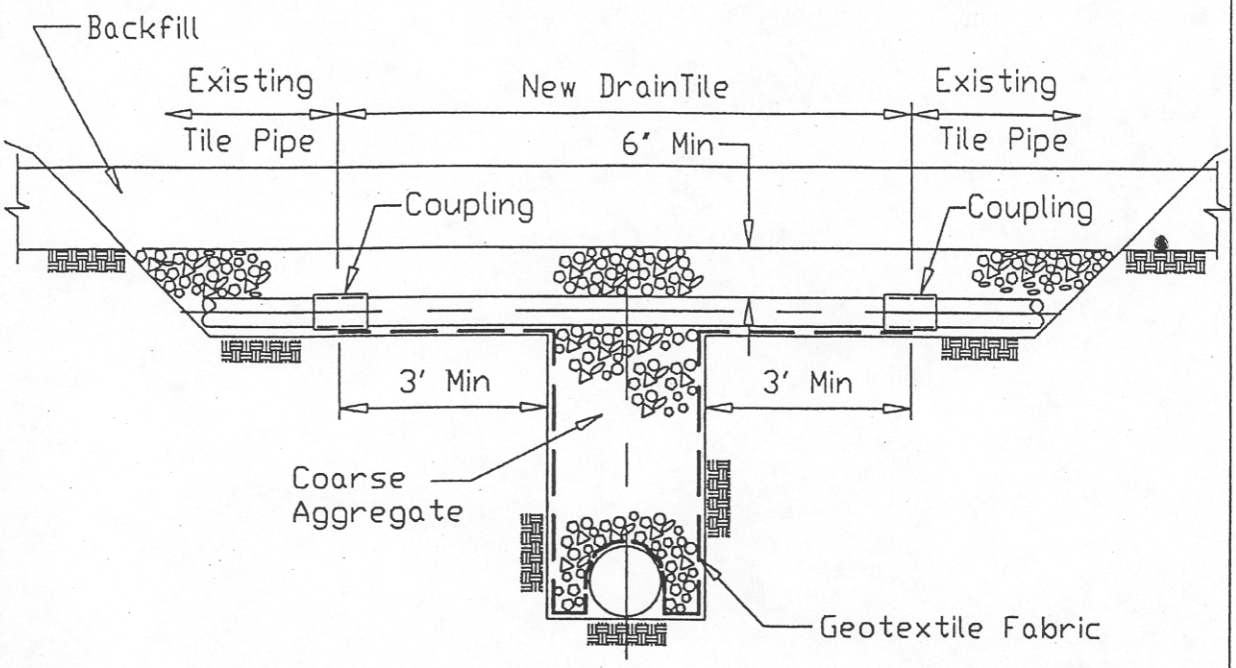

SECTION A-A

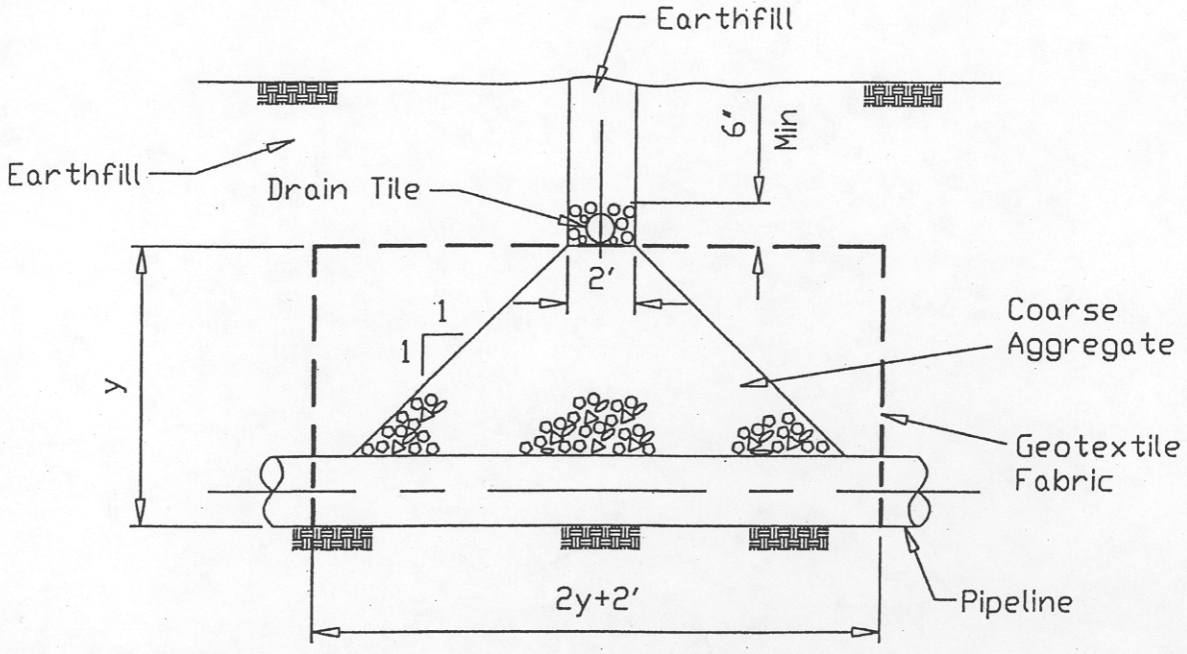

SECTION B-B

AUTOCAD2000

REFERENCE Project _____ Designed _____ Date _____ Checked _____ Date _____ Approved _____ Date _____	USDA NATURAL RESOURCES CONSERVATION SERVICE ILLINOIS	STANDARD DWG. NO. IL-ENG-150B SHEET 2 OF 2 DATE: 12/98

Material Specification 592—Geotextile

1. Scope
This specification covers the quality of geotextiles.

2. General requirements
Fibers (threads and yarns) used in the manufacture of geotextile shall consist of synthetic polymers composed of a minimum of 85 percent by weight polypropylenes, polyesters, polyamides, polyethylene, polyolefins, or polyvinylidene-chlorides. They shall be formed into a stable network of filaments or yarns retaining dimensional stability relative to each other. The geo-textile shall be free of defects and conform to the physical requirements in tables 592–1 and 592–2. The geotextile shall be free of any chemical treatment or coating that significantly reduces its porosity. Fibers shall contain stabilizers and/or inhibitors to enhance resistance to ultraviolet light.

Thread used for factory or field sewing shall be of contrasting color to the fabric and made of high strength polypropylene, polyester, or polyamide thread. Thread shall be as resistant to ultraviolet light as the geotextile being sewn.

3. Classification
Geotextiles shall be classified based on the method used to place the threads or yarns forming the fabric. The geotextiles will be grouped into woven and nonwoven types.

***Woven*—**Fabrics formed by the uniform and regular interweaving of the threads or yarns in two directions. Woven fabrics shall be manufactured from monofilament yarn formed into a uniform pattern with distinct and measurable openings, retaining their position relative to each other. The edges of fabric shall be selvedged or otherwise finished to prevent the outer yarn from unraveling.

***Nonwoven*—**Fabrics formed by a random placement of threads in a mat and bonded by heat-bonding, resin-bonding, or needle punching. Nonwoven fabrics shall be manufactured from individual fibers formed into a random pattern with distinct, but variable small openings, retaining their position relative to each other when bonded by needle punching, heat, or resin bonding. The use of nonwovens other than the needle punched geotextiles is somewhat restricted (see note 3 of table 592–2).

4. Sampling and testing
The geotextile shall meet the specified requirements (table 592–1 or 592–2) for the product style shown on the label. Product properties as listed in the latest edition of the "Specifiers Guide," Geotechnical Fabrics Report, (Industrial Fabrics Association International, 1801 County Road BW, Roseville, MN 55113-4061) and that represent minimum average roll values, are acceptable documentation that the product style meets the requirements of these specifications.

For products that do not appear in the above directory or do not have minimum average roll values listed, typical test data from the identified production run of the geotextile will be required for each of the specified tests (tables 592–1 or 592–2) as covered under clause AGAR 452.236-76.

5. Shipping and storage
The geotextile shall be shipped/transported in rolls wrapped with a cover for protection from moisture, dust, dirt, debris, and ultraviolet light. The cover shall be maintained undisturbed to the maximum extend possible before placement.

Each roll of geotextile shall be labeled or tagged to clearly identify the brand, class, and the individual production run in accordance with ASTM D 4873.

Table 592–1 Requirements for woven geotextiles

Property	Test method	Class I	Class II & III	Class IV
Tensile strength (pounds) 1/	ASTM D 4632 grab test	200 minimum in any principal direction	120 minimum in any principal direction	180 minimum in any principal direction
Elongation at failure (percent) 1/	ASTM D 4632 grab test	<50	<50	<50
Puncture (pounds) 1/	ASTM D 4833	90 minimum	60 minimum	60 minimum
Ultraviolet light (% residual tensile strength)	ASTM D 4355 150-hr exposure	70 minimum	70 minimum	70 minimum
Apparent opening size (AOS)	ASTM D 4751	As specified, but no smaller than 0.212 mm (#70) 2/	As specified, but no smaller than 0.212 mm (#70) 2/	As specified, but no smaller than 0.212 mm (#70) 2/
Percent open area (percent)	CWO-02215-86	4.0 minimum	4.0 minimum	1.0 minimum
Permitivity sec^{-1}	ASTM D 4491	0.10 minimum	0.10 minimum	0.10 minimum

1/ Minimum average roll value (weakest principal direction).
2/ U.S. standard sieve size.
Note: CWO is a USACE reference.

Table 592–2 Requirements for nonwoven geotextiles

Property	Test method	Class I	Class II	Class III	Class IV 3/
Tensile strength (lb) 1/	ASTM D 4632 grab test	180 minimum	120 minimum	90 minimum	115 minimum
Elongation at failure (%) 1/	ASTM D 4632	≥ 50	≥ 50	≥ 50	≥ 50
Puncture (pounds)	ASTM D 4833	80 minimum	60 minimum	40 minimum	40 minimum
Ultraviolet light (% residual tensile strength)	ASTM D 4355 150-hr exposure	70 minimum	70 minimum	70 minimum	70 minimum
Apparent opening size (AOS)	ASTM D 4751	As specified max. #40 2/	As specified max. #40 2/	As specified max. #40 2/	As specified max. #40 2/
Permittivity sec^{-1}	ASTM D 4491	0.70 minimum	0.70 minimum	0.70 minimum	0.10 minimum

1/ Minimum average roll value (weakest principal direction).
2/ U.S. standard sieve size.
3/ Heat-bonded or resin-bonded geotextile may be used for classes III and IV. They are particularly well suited to class IV. Needle-punched geotextiles are required for all other classes.

4. Rock Removal

A. The top 42 inches of a water or sewer line trench will not be backfilled with soil containing rocks that are larger than 3 inches in any dimension.

B. If trenching, blasting, or boring operations are required through rocky terrain, suitable precautions will be taken to eliminate the potential for rocks to become interspersed with the soil material that is placed back in the trench.

C. Rocks and/or soil containing rocks that are larger than 3 inches in any dimension must be hauled off the landowner's premises or disposed of on the landowner's premises at a location that is mutually acceptable to the landowner and the Project Sponsor.

5. Removal Of Construction Debris

All construction-related debris and material will be removed from the landowner's property. (Note: Such material to be removed would include litter generated by the construction crews.)

6. Compaction, Rutting, Fertilization, Liming

A. When water and sewer lines are buried in trenches that are **greater than 24 inches in width:**

1. Compaction will be alleviated on the trench and any adjacent work areas that are traversed by construction equipment. Cropland will be ripped at least 18 inches deep and pasture and woodland will be ripped or chiseled at least 12 inches deep.

2. Any other areas of the right-of-way which are traversed by construction equipment and related vehicles will be ripped or chiseled at least 12 inches deep.

3. At least 3 passes will be made over all lands to be ripped and/or chiseled.

4. All cropland that has been disturbed by construction activities will be limed and fertilized where necessary in order to benefit the current and/or next year's agricultural production or vegetative cover to control soil erosion.

B. When water and sewer lines are buried in trenches **less than 24 inches wide**, all right-of-way that has been traversed by construction equipment and related vehicles will be chiseled at least 12 inches deep with at least 3 passes being made.

C. All ripping and chiseling will be done at a time when the soils are dry enough for normal tillage operations to occur on undisturbed cropland adjacent to the areas to be tilled.

7. Land Leveling

A. The Project Sponsor will remain liable, for a period of two (2) years following the completion of a water or sewer line, to restore any right-of-way to its original elevation and contour should uneven settling occur or surface drainage problems develop due to inaccurate land leveling immediately following a water or sewer line's construction.

B. The Project Sponsor will provide the landowners with a telephone number and address that may be used to alert the Project Sponsor of the need to perform additional land leveling services.

8. Prevention Of Soil Erosion

A. The Project Sponsor will work with landowners to prevent excessive erosion on lands disturbed by construction. Reasonable methods will be implemented to control erosion. This is not a requirement, however, if the land across which a water or sewer line is constructed is bare cropland that the landowner intends to leave bare until the next crop is planted.

B. If the landowner and Project Sponsor cannot agree upon a reasonable method to control erosion on the landowner's right-of-way, the Project Sponsor will follow the recommendations of the appropriate county Soil and Water Conservation District if the landowner so requests.

9. Repair Of Damaged Soil Conservation Practices

All soil conservation practices (such as terraces, grassed waterways, filter strips, concrete structures, dams, etc.) that are damaged by water or sewer line construction will be restored to at least their pre-construction condition.

10. Damages To Private Property

A. With the exception of tile line repairs, the Project Sponsor will repair, replace, or pay to repair or replace damaged private property within 45 days, weather and landowner permitting, after a water or sewer line has been constructed across any affected property.

B. Similar relief for damages will be extended by the Project Sponsor for any construction-related damages that occur off of the established water or sewer line right-of-way.

C. The Project Sponsor will remain liable to correct damages to private property beyond the initial construction of a water or sewer line, to those damages incurred by future construction, operation, maintenance, and repairs.

11. Clearing Of Trees And Brush From The Easement

A. If trees are to be removed from the right-of-way, the Project Sponsor will consult with the landowner to see if there are trees of commercial or other value to the landowner.

B. If there are trees of commercial or other value to the landowner, the Project Sponsor will allow the landowner the right to retain ownership of the trees with the disposition of the trees to be negotiated prior to the commencement of land clearing.

C. The Project Sponsor will follow the landowner's desires which are consistent with any applicable laws or ordinances regarding the disposal of trees, brush, and stumps of no value to the landowner by burning, burial, etc., or complete removal from any affected property.

12. Interference With Irrigation Systems

A. If a water or sewer line intersects an operational (or soon to be operational) spray irrigation system, the Project Sponsor will establish with the landowner an acceptable amount of time the irrigation system may be out of service.

B. If an irrigation system interruption results in crop damages, either on the water or sewer line right-of-way or off the right-of-way, the landowner will be compensated for all such crop damages.

C. If it is feasible and mutually acceptable to the Project Sponsor and the landowner, temporary measures will be implemented to allow an irrigation system to continue to operate across land on which a water or sewer line is also being constructed.

13. Ingress And Egress Routes

Prior to any water or sewer line construction, the Project Sponsor and the landowner will reach a mutually acceptable agreement on the route that will be utilized for entering and leaving the water or sewer line right-of-way should access to the right-of-way not be practical or feasible from adjacent segments of the water or sewer line right-of-way or from public highway or railroad right-of-way.

14. Temporary Roads

A. The location of temporary roads to be used for construction purposes will be negotiated with the landowner.

B. If temporary roads must be constructed, they will be designed to not impede surface drainage soil erosion on or near the temporary roads will be minimized.

C. Upon abandonment, temporary roads may be left intact through mutual agreement of the landowner and the Project Sponsor.

D. If the temporary roads are to be removed, the right-of-way upon which the temporary roads are constructed will be returned to their previous use and restored to the same or better condition as existed prior to their construction.

15. Weed Control

A. On any right-of-way over which the Project Sponsor has jurisdiction as to the surface use of such land (well heads, pump or lift stations, valve sites, etc.), the Project Sponsor will provide for weed control in a manner that does not allow for the spread of weeds onto adjacent lands used as cropland.

B. The Project Sponsor will remain liable for the costs incurred by owners of land adjacent to surface facilities when the landowners must control weeds on their land which have spread from land accommodating water or sewer line surface facilities.

16. Pumping Of Water From Open Trenches

A. In the event it becomes necessary to pump water from open trenches, the Project Sponsor will pump the water in a manner that will avoid damaging adjacent agricultural land. Such damages include, but are not limited, inundation of crops for more than 24 hours and the deposition of sediment and gravel in fields, pastures, ditches, and any water bodies or water courses.

B. If it is impossible to avoid water-related damages as described in 16.A. above, the Project Sponsor will compensate the landowners for the damages or will correct the

damages so as to restore the agricultural land, water courses, etc. to their pre-existing condition.

C. All pumping of water shall comply with existing drainage laws, local ordinances relating to such activities, and provisions of the Clean Water Act.

17. Aboveground Facilities

Aboveground facilities shall be located so they will not be a hindrance to ongoing agricultural activities occurring on the lands adjacent to the facilities. First priority shall be made to locating aboveground facilities on right-of-way that is not used as cropland. If this is not feasible, such facilities shall be located so as to incur the least hindrance to the adjacent cropping operations (i.e., located in field corners or areas where at least one side is not used for cropping purposes).

18. Advance Notice Of Access To Private Property

A. The Project Sponsor will provide the landowner or tenant with a minimum of 24 hours prior notice before accessing his/her property for the purpose of constructing a water or sewer line.

B. Prior notice shall first consist of a personal contact or a telephone contact, whereby the landowner or tenant is informed of the Project Sponsor's intent to access the land. If the landowner or tenant cannot be reached in person or by telephone, the Project Sponsor will mail or hand deliver to the landowner or tenant's home a dated, written notice of the Project Sponsor's intent. The landowner or tenant need not acknowledge receipt of the written notice before the Project Sponsor can enter the landowner's property.

19. Reporting Of Inferior Agricultural Impact Mitigation Work

Prior to the installation of any water or sewer line, the landowners will be provided with a number they can call to alert the Project Sponsor should landowners observe inferior work relating to the agricultural impact mitigation work which is performed on their property.

20. Indemnification

For any water or sewer line installation, the Project Sponsor will indemnify all landowners, their heirs, successors, legal representatives, and assigns from and against all claims, injuries, suits, damages, costs, losses, and expenses including legal fees resulting from or arising out of the construction, maintenance, removal, repair, use or existence of a water or sewer line, whether heretofore or hereafter constructed, including damage to a water or sewer line or any of its appurtenances and the leaking of its contents, except where claims, injury, suits, damages, costs, losses, and expenses are caused by the negligence or intentional acts of the landowners, their heirs, successors, legal representatives, and assigns.

Technical Specifications

Intentionally Blank

General Information

Table of Contents

Section 10

10.01. ABBREVATIONS 10-1

10.02. AWWA SPECIFICATIONS TITLES 10-2

10.03. DEFINED INFORMATION 10-2

10.04. REQUIRED SUBMITTALS 10-2

10.04.01 Water Main 10-1

Intentionally Blank

General Information

Section 10

10.01. ABBREVATIONS

ADD	Addition
AI	Area Inlet
ANSI	American National Standards Institute
ASA	American Standards Association
ASTM	American Society for Testing and Materials
ATG	Adjust to Grade
AVE	Avenue
AWWA	American Water Works Association
BC	Back of Curb
BM	Benchmark
BK	Book
BLVD	Boulevard
BLDG	Building
BPS	Booster Pump Station
CB	County Highway Bore
CL	Centerline
CJ	Construction Joint
CONC	Concrete
CMP	Corrugated Metal Pipe
CF	Cubic Foot
CY	Cubic Yard
CI	Curb Inlet (Roads)
CI	Cast Iron (Water and Sewer)
CIOD	Cast Iron Outside Diameter
CTS	Copper Tube Size
DR	Drive
DI	Ductile Iron
ESMT	Easement
EJ	Expansion Joint
FT	Feet
FES	Flared End Section
FB	Flat Bottom
FL	Flow Line
FIP	Female Iron Pipe
GI	Grated Inlet
GST	Ground Storage Tank
HDPE	High-Density Polyethylene Pipe
IDOT	Illinois Department of Transportation
IHPA	Illinois Historic Preservation Agency
IN	Inches
INF	Inflow
INV	Invert
IPS	Iron Pipe Size
LA	Lane
LF	Lineal Foot
MAX	Maximum
MH	Manhole
MJ	Mechanical Joint
MIN	Minimum
MIP	Male Iron Pipe
N/F	Now and Former
NO	Number
PG	Page
PVMT	Pavement
POC	Point of Commencement
POB	Point of Beginning
PC	Point of Curvature (Roads)
PC	Pressure Class (Water and Sewer)
PE	Polyethylene
PI	Point of Intersection
PT	Point of Tangent
PVC	Polyvinyl Chloride
PE	Private Entrance (Roads)
PE	Polyethylene Pipe
PL	Property Line
PS	Pipe Stiffness
RR	Railroad
RCP	Reinforced Concrete Pipe
ROW	Right of Way
RPR	Resident Project Representative
SAN	Sanitary
SB	State Highway Bore
SDR	Standard Dimension Ratio
SF	Square Feet
SY	Square Yard
STA	Station
SWPPP	Storm Water Pollution Prevention Plan
TB	Township Road Bore
TBM	Temporary Bench Mark
TYP	Typical

TOC	Top of Curve	TSM	Temporary Seed and Mulch
TOA	Top of Asphalt	UFR	Uni-Flange Restraint
TBR	To Be Removed	VCP	Vitreous Clay Pipe
TBR&R	To Be Removed and Replaced		

10.02. AWWA SPECIFICATIONS TITLES

C-104-ANSI A21.4-Standard for Cement-Mortar Lining

C-105-ANSI A21.5-Standard for Polyethylene Encasement for Ductile-Iron Pipe Systems

C-110-ANSI A21.10-Standard for Ductile-Iron and Gray-Iron Fittings

C-111-ANSI A21.11-Standard for Rubber-Gasket Joints for Ductile-Iron Pressure Pipe and Fittings

C-115-ANSI A21.15-Standard for Flanged Ductile Iron Pipe with Threaded Flanges

C-150-ANSI A21.50-Standard for Thickness Design for Ductile-Iron Pipe

C-151-ANSI A21.51-Standard for Ductile-Iron Pipe, Centrifugally Cast

C-153-ANSI A21.53-Standard for Ductile-Iron Compact Fittings for Water Service

C-502-Standard for Dry-Barrel Fire Hydrants

C-509-Standard for Resilient –Seated Gate Valves for Water Supply Service

C-515-Standard for Reduced-Wall, Resilient-Seated Gate Valves for Water Supply Service

C-550-Protective Epoxy Interior Coating for Valves and Hydrants

C-606-Standard for Grooved and Shouldered Joints

10.03. DEFINED INFORMATION

OWNER – Jersey County Rural Water company

Selected Granular Backfill – CA-6 or equal

Standard Specifications for Water and Sewer Main Construction in Illinois ("Standard Water and Sewer Specs")

10.04. REQUIRED SUBMITTALS

On Submittals, please mark the product model number and the options and/or sizes you will be using. Also, please mark all standards required in the specifications. If the specifications are not marked up, preferably by highlighter, then they will be returned as rejected. Please provide a copy of all standards that a material references for our review and concurrence. The minimum number of submittals is 4, one for the CONTRACTOR and 3 to remain with the ENGINEER. The ENGINEER will not make copies of the submittals to return to the CONTRACTOR.

10.04.01 Water Main

WATER MAIN			Manufacturer	Model No.	Equal Accepted	Section	Submittal Required
1		**Anchor Coupling**	---	---	---	51.09.15	NO
2		**Casing**	---	---	---		NO
3		**Casing Spacers**				51.09.17	
	a	Water main 6-inch or smaller	CCI Pipeline Systems	---	YES		NO
	b	Water main larger than 6-inch	Cascade Waterworks Mfg. Co OR BWM Co.	---	YES		NO
4		**Combination Air Release Valve**				51.09.07	
	a	1"	Val-Matic	143C or 201C *	NO **		NO
	b	2"	Val-Matic	145C or 202C *	NO **		NO
5		**Copper Tracer Wire**				51.09.10	
	a	Bores	Copperhead Industries, Inc.	1245EHS	NO **		YES
	b	Trenching	Copperhead Industries, Inc.	1430HS	NO **		YES
	c	Connectors	Copperhead Industries, Inc.	3WB-01	NO **		YES
	d	Ground Rods	Copperhead Industries, Inc.	ANO -14	NO **	1	YES
6		**End Seals**	ENGINEER				NO
7		**Fittings**				51.07	
	a	Ductile Iron - Compact Fittings MJ	Tyler/Union +++	---	NO **		YES
	b	Ductile Iron - Flanged Fittings	Tyler/Union +++	---	NO **		YES
	c	RJ-PVC Expansion Coupling	---	---	---		NO
	d	HDPE Fittings	---	---	---		NO
8		**Gate Valves**				51.09.04	
	a	3 inch to 12 inch	Mueller Or AFC	Mueller A-2360-20	NO**		NO
9		**Hydrants**				59.09.02	
	a	2 1/4" Flushing Hydrant	Mueller	A-411	NO**		NO
	b	4 1/2" Flushing Hydrant	Mueller	A-420, Super Centurion 250	NO**		NO
	c.	5 1/4" Fire Hydrant	Mueller	A-420, Super Centurion 250	NO**		NO

10		**Pipe**					
	a	PVC	---	---	---	51.03	NO
	b	Restrainted Joint PVC	---	---	---	51.04	NO
	c	PE Service Line	---	---	---	51.09.01	NO
11		**Pipe Restraining Glands**				51.09.14	
	a	Ductile Iron	Ford/Uni-Flange (MegaLug is not an equal)+++	1400	YES		YES
	b	PVC	Ford/Uni-Flange	1500	YES		NO
12		**Saddle**	Mueller, Ford, A.Y. Mcdonald	Hinged Strap	YES	51.10.03	NO
13		**Sampling Station**	Kupferle Foundry	Eclipse No. 88	YES	51.09.09	NO
14		**Stainless Steel Taping**	Smith - Blair OR Ford	---	YES	51.09.12	NO
15		**Tracer Wire Access Points**					
	a	Marker	Rhino	TVPT90BB2	YES	51.09.11	NO
	b	Label	Rhino	GD-1332K	YES		
16		**Valve Box**	Tyler OR Sigma (equal in weight)	Tyler 6850	YES	51.09.05	NO
17		**Valve Box Marker**					
	a	Marker	Rhino Tri-View w/soil anchor plus	RPH3-72B	YES	51.09.06	NO
	b	Label		GD-5194K	YES	51.09.06	NO
18		**Meter Equipment**					
	a	Corporation Stop - 1"	Mueller, Ford, A.Y. McDonald	Ball Valve	YES	51.10.02	NO
	b	Meter Register	See 21 Below	---	NO **		NO
	c	Pressure Regulator	Watts	5M3-Z6	NO **	51.10.05	NO
19		**Meter Skin/Insulation**	Municipal and Contractor Ceiling Products		YES	51.09.07	NO
20		**Butterfly**	DeZurik or Henry Pratt Co. ++	---	YES	51.09.03	NO
21		**Meter**				51.10.04	
	a	5/8 x 3/4 inch meter w/ regulator	Sensus Iperl, 7-1/2"Lay Length.	Radio Read	NO **		NO
22		**Meter Yoke**					
	a	5/8 x 3/4 inch & 1 inch meters	Mueller, Ford, A.Y. McDonald	Tandem w/25AUB	NO **	51.10.06	NO
23		**Meter Box**		All Tough Core Plus (Depth x ID)			
	a	5/8 x 3/4 inch meter	Midwest Meter, Inc.	20" X 30"	NO **	51.10.07	NO
24		**Meter Lid**					
	a	5/8 x 3/4 inch meter	Mueller or Vestal, w/recessed hole in lid		NO **	51.10.08	NO

* Respectively

** no like, equivalent, or "or-equal" item or substitution permitted.

*** A.R.I. is located in Kfar charuv, 12932 Israel

++Milliken valves will not be allowed.

+++American Iron and Steel Act compliance required

General Requirement

Table of Contents

Section 12

12.01. SCOPE OF WORK 12-1
12.02. STRUCTURES AND UTILITES ENCOUNTERED 12-2
12.03. SHOP DRAWINGS 12-3
12.04. SOIL BORING DATA 12-3
12.05. CLEANING UP 12-3
12.06. GUARANTEE-WARRANTY 12-3
12.07. RIGHTS OF WAY AND EASEMENTS 12-3
12.08. CONTRACT RESPONSIBILITY 12-4
12.09. ELECTRICAL SERVICE 12-4
12.10. COORDINATION WITH RESIDENT PROJECT REPRESENTATIVE 12-4
12.11. TANK ACCESS ROAD 12-5
12.12. NPDES PERMIT COMPLIANCE 12-5
12.13. DISINFECTION 12-5
12.14. OWNERS STOP- WORK AUTHORITY 12-5
12.15. WATER USED BY CONTRACTOR 12-5
12.16. INSPECTION REPORT 12-5
12.17. ACCESS ROAD 12-5
12.18. GROUND STORAGE TANK 12-5

Intentionally Blank

General Requirements

Section 12

12.01. SCOPE OF WORK

The "Contract K" CONTRACTOR shall furnish all labor, tools, equipment, materials and perform all operations in connection with the construction of a new 200,000-gallon ground storage tank expandable to 400,000 gallons. The proposed ground storage tank will be located at the existing booster pump station on Route 3 that the OWNER currently owns and operates. **Base Bid A** is a bid to furnish and erect a 200,000-gallon Glass Coated Bolted Steel ground storage tank with a concrete floor. **Base Bid B** is a bid to furnish and erect a 200,000-gallon Glass Coated, Bolted Steel ground storage tank with a bolted steel floor. The OWNER reserves the right to accept either **Base Bid A** (Glass lined tank with concrete floor and starter ring) or **Base Bid B** (Glass-lined tank with bolted steel floor). This decision as to which bid will be accepted will be made after receipt of bids. **Note: The CONTRACTOR is responsible for the "Disinfection of the 200,000 gallon ground storage facility, thus should include the cost of all testing, sample taking, and chemicals to complete this task in the bid**.

In case of a conflict between the Construction Documents, the CONTRACTOR shall notify the ENGINEER prior to bidding to clarify the discrepancy and obtain a decision on which document governs. If the CONTRACTOR or any of his subcontractors fail to notify the ENGINEER prior to bidding then the CONTRACTOR shall provide and install the intended material or equipment at no additional cost to the contract price.

The CONTRACTOR shall be aware of existing utilities within the area. The CONTRACTOR shall maintain in operating condition all active utilities encountered. Existing utilities may only be relocated with the approval of the utility owner and the OWNER.

Whenever a product is identified on the drawings or in the specifications by reference to manufacturer's name and/or trade name, it is intended merely to establish a standard, and any equipment of other manufacturers which will perform adequately the services imposed by the general design will be considered equally acceptable provided: (1) in the opinion of the ENGINEER, the function, material, and service is equal; (2) any alternate material will be given consideration, provided it is submitted in sufficient detail to the ENGINEER not less than 7 days before date of bid opening. Reviewed shop drawings shall be returned to the CONTRACTOR before any construction is started or equipment is installed. The ENGINEER will not mark submittals "Approved" it is the CONTRACTOR'S responsibility to review, approve, and provide the correct material and equipment for the project.

The proposed tank shall be a new tank, a relocated previously used tank is not permissible.

The CONTRACTOR shall guarantee that the material furnished shall be properly installed, and when properly operated, shall perform the duty for which it is intended. He shall guarantee all materials, workmanship, and completed installation to be first class in every particular and shall, at his own expense, furnish and replace any part or parts that may prove defective in material, equipment, or workmanship within 5 years from the date of substantial completion, in accordance with the General Conditions of this contract.

This work shall be governed by an IEPA permit for construction. This permit shall be obtained for the CONTRACTOR by the OWNER before any construction operations begin. The OWNER will also obtain the necessary easements, NPDES permits, highway permits, and railroad permits to construct the improvements. The CONTRACTOR shall familiarize himself with all requirements as to traffic

control, flagmen, maintenance of trench, advance warning signs, etc., as required by state and local highway departments and railroads.

The CONTRACTOR is responsible for conforming with the requirements of all applicable health and safety regulations and precautions as required by local, state and federal regulatory agencies including, but not limited to OSHA and IDOL. In accordance with the requirements of the OSHA regulations for construction, the CONTRACTOR shall provide and require the use of personal protective and lifesaving equipment for all persons working in or about the project.

12.02. STRUCTURES AND UTILITES ENCOUNTERED

Various underground and surface utilities and related structures may or may not be present on project sites. The CONTRACTOR shall maintain in operating condition all utilities encountered in this work. Any existing utilities damaged as a result of this construction shall be repaired to the satisfaction of the utility owner at the CONTRACTOR's expense. Existing utilities may be relocated with the approval of the utility owner and the OWNER. The relocation shall be at the CONTRACTOR's expense, done according to the requirements of the utility owner and shall be sufficient to clear the work area.

Before beginning work in an area, the CONTRACTOR shall contact JULIE at 800-892-0123 and any other non-JULIE member companies maintaining utilities in the project area and request their assistance in field locating their utilities in that area. The CONTRACTOR, however, shall be solely responsible for the location of utilities. The CONTRACTOR is cautioned to verify with the utility ownership of poles, transformers, etc.

The CONTRACTOR shall be entirely responsible for all injuries to water pipes, electric conduits, existing drains or sewers, field tiles, sump pump drain lines, poles carrying currents, telephone or telegraph lines, railroad bridges and tracks, streets, pavements, sidewalks, curbs, fences, culverts, buildings, trees larger than 12 inches in diameter, or other structures of any kind met with during the prosecution of the work, whether on public or private property.

All such structures or utilities which are removed to allow work to be performed or damaged by it shall be restored to a condition at least equivalent to that which existed at the commencement of the work unless additional written arrangements are made satisfactory to the OWNER of said property. The CONTRACTOR shall care for and maintain all such structures or utilities encountered, and where service by them is interrupted, he shall provide and maintain temporary service until repair is complete and full service is restored. Repair of and restoration of service for essential structures or utilities shall be prompt; in these cases, if repair is unnecessarily delayed or unsatisfactory in the judgment of the ENGINEER, the OWNER or ENGINEER may have the repairs made and may deduct the cost thereof from payments due the CONTRACTOR. All costs associated with structure or utilities encountered including removal, replacement, repair, temporary service, or complications to proposed work shall be incidental to the project and shall be performed without any increase in the contract price.

Existing trees and shrubs within the project site shall be protected from damage. The CONTRACTOR shall be liable for damage to trees and shrubs which were to have been protected as directed by the ENGINEER, unless such damages are determined by the ENGINEER to have been unavoidable, and moneys due the CONTRACTOR may be withheld to cover such damages.

12.03. SHOP DRAWINGS

The CONTRACTOR shall furnish for review complete shop drawings in accordance with the General Conditions before starting any work

12.04. SOIL BORING DATA

Boring data can be obtained from the ENGINEER, is that obtained by the OWNER for his use only. The OWNER and ENGINEER make no warranty that such data is complete nor portrays the variation of subsurface conditions over the area of the work. The CONTRACTOR expressly understands that he is fully responsible for his interpretation of this data and for his own use of it. The CONTRACTOR is responsible for employing methods compatible with subsurface conditions as he finds them and should make subsurface investigations of his own as he deems appropriate.

12.05. CLEANING UP

During construction, the CONTRACTOR shall clean up as the work proceeds. The premises, easements, and right-of-way shall be kept free of accumulations of waste materials and earth, rubbish and other debris resulting from the work. If in the judgment of the OWNER, the CONTRACTOR fails to keep the site clean as described herein above, the OWNER may halt the construction and/or construction payments until the site has been cleaned up to the satisfaction of the OWNER.

At the completion of the project, the CONTRACTOR will remove all waste materials, rubbish and debris from and about the premises as well as all tools, scaffolding and surplus materials, and will leave the site clean and ready for occupancy by the OWNER. The CONTRACTOR will restore to their original conditions those portions of the site not designated for alteration by the contract Documents.

Open burning of debris will not be permitted unless specifically authorized in writing by the OWNER, and then only following state, municipal or other local codes, ordinances, rules or regulations.

12.06. GUARANTEE-WARRANTY

The suppliers and erectors of all equipment, apparatus, and work furnished and used in the construction of this project shall and hereby do warrant, and the CONTRACTOR shall and hereby does guarantee that all such equipment, apparatus, and work will satisfactorily perform the intended function as integral and coordinated units, and will remain free of defective materials and workmanship for a period of five (5) years from date of final acceptance by the OWNER, except where longer periods are herein specified in which case they shall govern.

The CONTRACTOR further agrees that he will, at his own expense and without extra cost to the OWNER, remove, repair, or replace all defective materials, equipment, apparatus and work, and all other work damaged thereby which becomes defective during the term of the Guaranty-Warranty.

12.07. RIGHTS OF WAY AND EASEMENTS

Intentionally Blank

12.08. CONTRACT RESPONSIBILITY

The OWNER will have electricity available and have the gravel entrance in place before the tank/foundation work begins. The tank CONTRACTOR is responsible for all foundation work, tank erection, and shall stub out 8-inch diameter ductile iron pipe a minimum of 5 feet beyond the drip edge of the tank. The tank CONTRACTOR shall remove all debris associated with their work from the site. The tank CONTRACTOR shall fill, disinfect, and sample the tank after the owner has completed necessary connections and building components. All filling and disinfection work shall be coordinated with the OWNER.

General site work will be completed by the OWNER including final grading and seeding, fencing, building construction, etc.

The overall project has been divided into three parts. A brief description of each Contract and their respective contract responsibilities is provided below for reference, and to assist with coordination among the various CONTRACTORS.

Contract "K"

The project described in these specifications is Contract "K" of Jersey County Rural Water Company (JCRWC) Phase V project that will consist of a 200,000-gallon GST.

Contract "J" – Base Bid consists of pipelines and associated appurtenances. The water main work will be independent of the other two contracts except for the RT 3 extension. The RT 3 connection point is on the same property as the Contract K GST. It is imperative for the Contract J contractor to coordinate with the Contract K contractor and JCRWC and accommodate their needs for access.

Contract "K" – Base Bid consists of a 200,000-gallon bolted glass lined ground storage tank to be constructed on property owned by JCRWC. Contract K contractor must coordinate their construction activities with both JCRWC and the Contract J contractor.

Contract "L" – Base Bid consists of 250,000-gallon legged elevated tank to be constructed on property owned by JCRWC. Contract K contractor must coordinate their construction activities with JCRWC.

The CONTRACTOR for each respective Contract should take this into account and include potential remobilization and project coordination costs into the bids. No additional costs will be allowed for remobilization or delays to the start-up/completion of any of the contracts due to the incompletion of one of the remaining Contracts. In addition to the items listed below, responsibility for other items as detailed on the Contract Drawings and listed in the remainder of the Project Specifications.

12.09. ELECTRICAL SERVICE

Intentionally Blank

12.10. COORDINATION WITH RESIDENT PROJECT REPRESENTATIVE

The CONTRACTOR shall notify the Resident Project Representative or ENGINEER of the proposed work schedule prior to each day. Any work accomplished without the Resident Project Representative being present due to improper notification shall be re-done, re-exposed, etc., to the satisfaction of the Resident Project Representative.

12.11. TANK ACCESS ROAD

Intentionally Blank

12.12. NPDES PERMIT COMPLIANCE

Intentionally Blank

12.13. DISINFECTION

CONTRACT "K" CONTRACTOR (Glass Coated, Bolted Steel ground storage tank) is responsible for the "Disinfection" of the 200,000-gallon ground storage facility, thus should include the cost of all testing, sample taking, and chemicals to complete this task in the bid.

12.14. OWNERS STOP- WORK AUTHORITY

The OWNER shall have the authority to halt any work that is not being performed in accordance with the Drawings and Specifications for this project. In this event, the CONTRACTOR shall immediately stop work on the particular item until which time the Resident Project Representative or Engineer shall review the discrepancy, and all parties shall agree as to the proper construction method. No additional compensation shall be allowed for down time during a stop-work period initiated by the OWNER. In addition, if the CONTRACTOR fails to halt construction, they shall re-do the work properly at no additional cost to the OWNER.

12.15. WATER USED BY CONTRACTOR

Water used by the CONTRACTOR to initially fill, disinfect (first attempt only), chlorinate, and place the tank in service shall be furnished to the CONTRACTOR by the OWNER at no cost. Water used to re-disinfect the tank or the water used during the 2-year and 5-year inspection will not be billed to the CONTRACTOR. Losses of water due to leaks in the tank, accidental or otherwise, during construction and/or the 5-year warranty period shall be estimated and paid by the CONTRACTOR at the rate of $5.50 per thousand gallons used.

12.16. INSPECTION REPORT

Intentionally Blank

12.17. ACCESS ROAD

Intentionally Blank

12.18. GROUND STORAGE TANK

The existing gravel access road for the booster pump station/ proposed ground storage tank site shall also serve as a temporary access road for the ground storage tank CONTRACTOR (Contract “K”).

Concrete

Table of Contents

Section 21

21.01. SCOPE OF WORK 21-1
21.02. CONCRETE AGGREGATES 21-1
21.03. WATER 21-1
21.04. REINFORCEMENT (METAL) 21-1
21.05. MATERIAL STORAGE 21-1
21.06. CONCRETE QUALITY 21-1
21.07. STRENGTH OF CONCRETE 21-2
21.08. CONCRETE PROPORTIONS AND CONSISTENCY 21-2
21.09. TESTS ON CONCRETE 21-3
21.10. PREPARATION OF EQUIPMENT AND PLACE OF DEPOSIT 21-3
21.11. MIXING OF CONCRETE 21-4
21.12. CONVEYING 21-4
21.13. DEPOSITING 21-4
21.14. CURING 21-4
21.15. COLD WEATHER REQUIREMENTS 21-5
21.16. FORMS 21-5
21.17. REMOVAL OF FORMS 21-5
21.18. CLEANING AND BENDING REINFORCEMENT 21-5
21.19. PLACING REINFORCEMENT 21-6
21.20. SPLICES (REINFORCEMENT) 21-6
21.21. CONCRETE PROTECTION OF REINFORCEMENT 21-6
21.22. CONSTRUCTION JOINTS 21-6
21.23. CLEAN-UP OF FINAL SURFACES 21-6

Intentionally Blank

Concrete

Section 21

21.01. SCOPE OF WORK

Portland cement shall comply with the Standard Specification for Portland Cement, ASTM C150, or Standard Specification for Air-Entraining Portland Cement, ASTM C175 and shall be Type I or IA.

21.02. CONCRETE AGGREGATES

Concrete aggregates shall conform to specifications for Concrete Aggregates, ASTM C33, except that aggregates failing to meet these specifications but which have been shown by special test or actual service to produce concrete of the required quality, may be used under paragraph 21.08 of this section where authorized by the ENGINEER.

21.03. WATER

Water used in mixing concrete shall be clean and free from deleterious amounts of acids, alkalis, or organic materials.

21.04. REINFORCEMENT (METAL)

Reinforcing bars shall conform to the requirements of tentative specifications for minimum requirements for the Deformations of Deformed Steel Bars for Concrete Reinforcement, ASTM- A-615/615M, and of tentative specifications for Billet-Steel Bars for Concrete Reinforcement, ASTM-A-615/615M, or tentative specifications for Rail-Steel Bars for Concrete Reinforcement, ASTM-A-616, or tentative specification for Axle-Steel Bars for Concrete Reinforcement, ASTM-A-617/617M.

Welded wire fabric or cold-drawn wire for concrete reinforcement shall conform to the requirements of standard specifications for Cold-Drawn Steel Wire for Concrete Reinforcement, ASTM-A, or standard specifications for Welded Steel Wire Fabric for Concrete Reinforcement, ASTM-A-185.

21.05. MATERIAL STORAGE

Cement, aggregates and reinforcement shall be stored at the batch plant or work site in such a manner as to prevent deterioration or intrusion of foreign matter. Any material which has deteriorated or which has been damaged shall not be used for concrete.

21.06. CONCRETE QUALITY

The allowable stresses for design are based on the specified minimum 28 day compressive strength of the concrete or on the specified minimum compressive strength at the earlier age at which the concrete may be expected to receive its full load. The strength of concrete, at specified ages for which all parts of the structure were designed, are shown on the drawings. Where not specified in the drawings, minimum 28 day compressive strength of the concrete shall be 3500 psi.

21.07. STRENGTH OF CONCRETE

The determination of the proportions of cement, aggregate and water to attain the required strength, shall be made by one of the following methods.

Method I: When no preliminary tests of the materials to be used are made, the water content per sack of cement shall not exceed the values in the following table. Method II shall be employed when artificial aggregates or admixtures are used.

Assumed Strength of Concrete Mixtures

Water Content in U.S. Gals. per Sack of Cement	Assumed Compressive Strength at 28-day psi
7-3/4	2500
6-3/4	3000
6	3500
5-1/2	3750

NOTE: In interpreting this table, surface water contained in the aggregate must be included as part of the mixing water in computing the water content.

Method II: Proportions of the materials and water content, other than those shown in the above table, may be used provided that the strength quality of the concrete proposed for use, shall be established by tests, which shall be made in advance of the beginning of operations, using the consistencies suitable for the work and in accordance with Standard Method of Making Concrete Compression and Flexure Test Specimens in the Laboratory, ASTM-C-192, and with Standard Method of Test for Compressive Strength of Molded Concrete Cylinders, ASTM-C-39.

A curve representing the relation between the water content and the average 28 day compressive strength, or earlier strength at which the concrete is to receive its full working load shall be established for a range or earlier strength at which the concrete is to receive its full working load shall be established for range of values including all the compressive strengths called for on the drawings. The curve shall be established by at least 3 points, each point representing average values from at least 4 test specimens. Amount of water used in the concrete, as determined for a curve, shall correspond to a strength which is 15 percent greater than that called for on the drawings. No substitutions shall be made in the materials used on the work without additional tests in accordance, herewith, to show that the quality of the concrete is satisfactory.

21.08. CONCRETE PROPORTIONS AND CONSISTENCY

The proportions of aggregate to cement for any concrete shall be such as to produce a mixture which will work readily into the corners and angles of the forms and around reinforcement with the methods of placing employed on the work but without permitting the material to segregate or excess free water to collect on the surface.

The combined aggregates shall be of such composition of size that when separated on the No. 4 sieve (fine aggregate) shall not be less than 30 percent or more than 50 percent of the total unless otherwise required by the ENGINEER.

The method of measuring concrete materials shall be such that the proper proportions can be accurately controlled and easily checked at anytime during the work. The received measurement shall be width rather than volume. Measurements of materials for ready-mixed concrete shall conform to the Tentative Specifications for Ready-Mixed Concrete, ASTM-C.

21.09. TESTS ON CONCRETE

The CONTRACTOR shall employ and furnish an independent, qualified, testing agency, suitable to the ENGINEER and OWNER, for the purposes of all required testing of materials, certification of proper concrete placement during pour and work accomplished. All test results shall be reported to the ENGINEER and the CONTRACTOR on the same day the tests are made.

Technicians representing the testing agency shall inspect the materials and manufacture of concrete and shall report their findings to the ENGINEER and the CONTRACTOR. When it appears that the material furnished or work performed by the CONTRACTOR fails to fulfill specification requirements, the technician shall direct the attention of the ENGINEER and the CONTRACTOR to such failure.

The technician shall not act as foreman or perform other duties for the CONTRACTOR. Work will be checked as it progresses, but failure to detect any defective work or materials shall not in any way prevent later rejection when such defect is discovered, nor shall it obligate the ENGINEER for final acceptance. Technicians are not authorized to revoke, alter, relax, enlarge, or release any requirement of the specifications nor to approve or accept any portion of the work.

During the progress of the work compression test specimens shall be made and cured in accordance with Standard Method of Making and Curing concrete Compression and Flexure Test Specimens in the Field, ASTM-C-31.

Not less than 3 specimens shall be made for each test, nor less than 1 test for each day's pour or for each 50 cubic yards of concrete of each class. Specimens shall be cured under laboratory conditions except that when, in the opinion of the ENGINEER, there is a possibility of the surrounding air temperature falling below 40 degrees F the ENGINEER may require additional specimens to be cured under job conditions.

Specimens shall be tested in accordance with Standard Methods of Tests for Compressive Strength of Molded Concrete Cylinders, ASTM-C-39.

The standard age of test shall be 7 days and 28 days.

If the average strength of the laboratory control cylinders for any portion of the structure falls below the compressive strengths called for on the drawings, the ENGINEER shall have the right to require conditions of temperature and moisture necessary to secure the required strength and may require tests in accordance with Standard Method of Securing, Preparing and Testing Specimens of Hardened Concrete for Compressive and Flexural Strengths, ASTM-C-42 or order load tests to be made on the portions of structure so affected.

21.10. PREPARATION OF EQUIPMENT AND PLACE OF DEPOSIT

Before placing concrete, all equipment for mixing and transporting the concrete shall be cleaned, all debris or ice shall be removed from the places to be occupied by the concrete. Forms shall be thoroughly wetted (except in freezing weather) or oiled and masonry filler units that will be in contact with concrete shall be well drenched (except in freezing weather) and the reinforcement shall be thoroughly cleaned of ice or other coatings.

21.11. MIXING OF CONCRETE

The concrete shall be mixed until there is a uniform distribution of the materials and shall be discharged completely before the mixer is recharged.

For job mix concrete, the mixer shall be rotated at a speed recommended by the manufacturer and mixing shall be continued for at least 1 minute after all materials are in the mixer.

Ready-mixed concrete shall be mixed and delivered in accordance with the requirements set forth in Tentative Specifications for Ready-Mixed Concrete, ASTM-C-94.

21.12. CONVEYING

Concrete shall be conveyed from the mixer to the place of final deposit by methods which will prevent the separation or loss of the materials.

Equipment for chuting, pumping and pneumatically conveying concrete shall be of such size and design as to insure a practically continuous flow of concrete at the delivery end without separation of the materials.

21.13. DEPOSITING

Concrete shall be deposited as nearly as practicable in its final position to avoid segregation due to re-handling or flowing. The concreting shall be carried on at such a rate that the concrete is at all times plastic and flows readily into the space between the bars. No concrete that has partially hardened or been contaminated by foreign material shall be deposited on the work, or shall re-tempered concrete be used.

When concreting is once started, it shall be carried on as a continuous operation until the placing of the panel or level. When construction joints are necessary, they shall be made in accordance with paragraph 21.22, this section.

All concrete shall be thoroughly compacted by suitable means during the operation of placing. Whenever practical the concrete shall be compacted with an internal mechanical vibrator of such construction that 4,500 cycles per minute shall be transmitted to the concrete. The CONTRACTOR shall have, on the job site, a sufficient number of vibrators to ensure that compaction can be started immediately after the concrete has been deposited in the forms.

The concrete shall be thoroughly worked around the reinforcement and embedded fixtures and into the corners of the forms.

Where conditions make compacting difficult or where the reinforcement is congested, batches of mortar containing the same proportions of cement to sand; as used in the concrete, shall first be deposited in the forms.

21.14. CURING

Provisions shall be made for maintaining concrete in a moist condition for at least 5 days after the placement of the concrete. Curing may be obtained by any one of the approved “Methods of Curing” subject to approval of the ENGINEER.

No structures, structural members, or other appurtenances shall be placed upon any foundation concrete for a minimum of 7 days after the foundation pour is completed, and the 7 day cylinder test results have been reported to the ENGINEER.

21.15. COLD WEATHER REQUIREMENTS

Adequate equipment shall be provided for heating the concrete materials and protecting the concrete during freezing or near-freezing weather. No frozen materials containing ice shall be used.

All concrete material and all reinforcement, forms, fillers, and ground with which the concrete is to come in contact shall be free from frost. Whenever the temperature of the surrounding air is below 40 degrees F all concrete placed in the forms shall have a temperature of between 50 degrees F and 70 degrees F, and adequate means shall be provided for maintaining a temperature of not less than 70 degrees F for 3 days or 50 degrees F for 5 days. The housing, covering or other protection used in connection with the curing shall remain in place and intact at least 24 hours after the artificial heating is discontinued. Salt or other chemicals shall not be used to prevent freezing. If the temperature of the surrounding air is less than 50 degrees F, the CONTRACTOR shall use a temperature recording device to record the temperature to prove the temperature was not less than 70 degrees F for 3 days or 50 degrees F for 5 days and provide a means to visually check the air temperature under the insulating blanket. The method for cold weather pouring and curing shall be approved by the ENGINEER and OWNER prior to concrete placement.

21.16. FORMS

Forms shall conform to the shape, lines, and dimensions of the members, as shown on the drawings, and shall be substantial and sufficiently tight to prevent leakage of mortar. Any mortar that is leaked between and/or around forms or permanent surfaces shall be mechanically smoothed.

Forms shall be properly braced or tied together to maintain position and shape.

21.17. REMOVAL OF FORMS

Forms shall be removed in such a manner as to ensure the complete safety of the structure. In no case shall the supporting forms or shoring be removed until the members have acquired sufficient strength to support safely their weight and the load thereon. In addition, forms shall remain in place a minimum of 24 hours after the end of the concrete pour.

21.18. CLEANING AND BENDING REINFORCEMENT

Metal reinforcement, at the time concrete is placed, shall be free from all rust, scale or other coatings that will destroy or reduce the bond.

Bends for stirrups and ties shall be made around a pin having a diameter not less than 2 times the minimum thickness of the bar. Bends for other bars shall be made around a pin having a diameter not less than 6 times the minimum thickness of the bar, except that for bars larger than 1 inch, the pin shall be not less than 8 times the minimum thickness of the bar. All bars shall be bent cold.

21.19. PLACING REINFORCEMENT

Metal reinforcement shall be accurately placed in accordance with the plans and shall be adequately secured in position by concrete or metal chairs and spacers.

21.20. SPLICES (REINFORCEMENT)

In general, splices in area of critical stress shall be avoided. Splices shall provide sufficient lap to transfer the stress between bars by bond and shear.

21.21. CONCRETE PROTECTION OF REINFORCEMENT

The reinforcement shall be protected by the thickness of concrete as shown on the drawings. Where not otherwise shown, the thickness of concrete over the reinforcement shall be as follows:

A. Where concrete is deposited against the ground without the use of forms, not less than 3 inches.

B. Where concrete is exposed to the weather, or exposed to the ground, but placed in forms, not less than 2 inches for bars more than 5/8 inches in diameter and 1-1/2 inches for bars 5/8 inches or less in diameter.

C. In slabs and walls not exposed to the ground or to the weather, not less than 3/4 inch.

D. In beams, girders and columns not exposed to the ground or to the weather, not less than one and 1-1/2 inches. In all cases the thickness of concrete over the reinforcement shall be in accordance with ACI 318, or its latest revision. Exposed reinforcement bars intended for future use shall be protected from corrosion by concrete or other adequate coverings.

21.22. CONSTRUCTION JOINTS

Joints not indicated on the drawings shall be so made and located as to not impair the strength of the structure. Where a joint is to be made, the surface of the concrete shall be thoroughly cleaned. In addition, vertical joints shall be thoroughly wetted and coated with a neat cement grout immediately before placing new concrete.

When deemed appropriate by the ENGINEER, the CONTRACTOR will dowel construction joints. The ENGINEER will specify the size, location, and placement.

21.23. CLEAN-UP OF FINAL SURFACES

The surface of the concrete shall be free of spalling and holes. The CONTRACTOR shall be responsible for filling in the holes with a method and materials approved by the ENGINEER and OWNER. Any mortar that leaks through or around a form shall be mechanically removed to provide a smooth surface matching the surround concrete surface.

SURFACE REPLACEMENT AND SITE WORK

Table of Contents

Section 31

31.01. SCOPE OF WORK 31-1
31.02. RIGHT-OF-WAY CLEARING 31-1
31.03. EARTHWORK 31-1
31.04. PAVING AND SURFACING 31-7
31.05. SITE IMPROVEMENTS 31-7
31.06. LANDSCAPING 31-7
31.07. FENCING 31-7
31.08. DEMOLITION, SALVAGE, AND ABONDONMENT 31-7
31.09. EROSION CONTROLS 31-7
31.10. ROCK EXCAVATION 31-7
31.11. UNSUITABLE BACKFILL MATERIAL 31-8

Intentionally Blank

SURFACE REPLACEMENT AND SITE WORK

Section 31

31.01. SCOPE OF WORK

In cases where water mains are crossing open areas where early settlement is not critical, backfill, from the centerline of the pipe to the surface, shall be made by any acceptable method which will not dislodge or damage the pipe or cause bridging action in the trench. Only select excavated materials free from clods or stones (larger than 3 inches) shall be used in backfilling up to 12 inches above the top of the pipe. Excess material shall be neatly rounded over the top of the trench to allow settlement of the trench. In final clean-up operations, the CONTRACTOR shall reshape the surface to level out any uneven settlement that has occurred. This shall be the case unless otherwise shown on the plans or as directed by the ENGINEER.

During construction, the CONTRACTOR shall clean up as the work proceeds. The premises shall be kept free of accumulations of waste materials and earth, rubbish and other debris resulting from the work. If in the judgement of the OWNER the CONTRACTOR fails to keep the site clean as described hereinabove, the OWNER may halt the construction and/or construction payments until the site has been cleaned up to the satisfaction of the OWNER.

At the completion of the project, the CONTRACTOR will remove all waste materials, rubbish and debris from and about the premises as well as all tools, and surplus materials, and will leave the site clean and ready for occupancy by the OWNER. The CONTRACTOR will restore to their original conditions those portions of the site not designated for alteration by the Contract Documents.

Open burning of debris will not be permitted unless specifically authorized in writing by the OWNER, and then only following state, municipal or other local codes, ordinances, rules or regulations.

The CONTRACTOR shall be responsible for obtaining all material storage locations and where not stored on OWNER's property, for providing the OWNER with a signed copy of a lease agreement naming landowner as Owner and CONTRACTOR as Tenant, for any vandalism (graffiti, etc.), damage, or contamination (due to crop spraying or otherwise) that may occur and for clean-up at said sites; all incidental to the Contract price.

31.02. RIGHT-OF-WAY CLEARING

Intentionally Blank

31.03. EARTHWORK

A. Site Excavation

1. General - Excavation shall be done to the lines and slopes shown on the Drawings. Unstable or unsuitable materials shall be removed and replaced with approved material if, in the opinion of the ENGINEER, it would be a detriment to the excavation. The CONTRACTOR will be allowed a negotiated compensation for removal and replacement of unsuitable existing earth materials below natural topsoil. The quantity for this work shall be as determined by the ENGINEER; in determining the pay quantity for this work, natural topsoil shall be considered as 12 inches thick

and no additional compensation will be allowed for removal of topsoil. Unstable or unsuitable material shall be disposed of by the CONTRACTOR.

2. Topsoil Excavation - The CONTRACTOR shall remove topsoil and soil with a high organic content from the area of immediate construction and shall stockpile it on the site for use in finish grading in accordance with Section 31.03.F

3. Borrow Excavation - Any soil in addition to that excavated at the site required to complete fill area shall be furnished by the CONTRACTOR at his own expense. Borrow excavation shall not be placed in fills until the material is approved by the ENGINEER. See Section 0, Earth Fill.

4. The CONTRACTOR shall at all times during construction provide, maintain, and operate as needed ample means and devices with which to promptly remove and properly dispose of all water entering the trenches or excavation. All trenches or excavation shall be kept dry until construction is complete. No foreign water shall be allowed to enter any pipe which has been laid. No water shall be allowed to stand over concrete until the concrete has set for at least 24 hours. This refers to thrust blocks, anchorages, foundations, etc..

   If well pointing or the installation of temporary drains are required to complete the work, they shall be provided by the CONTRACTOR.

   No additional compensation shall be made to the CONTRACTOR for any dewatering techniques, equipment or labor.

B. Earth Fill

1. General - This work shall consist of the construction of fills by the placement and compaction of specified or suitable materials above the natural ground or other surface.

2. Subgrade Preparation - The area upon which a fill is to be placed shall be prepared by removing all topsoil containing roots, vegetation and other deleterious materials. The surfaces of each portion of the foundation, immediately prior to placing the earth fill, shall have all water removed from depressions and shall be properly moistened and sufficiently clean to obtain a suitable bond with the earth fill. When directed by the ENGINEER, the subgrade shall be benched where fill is to be placed on a slope.

   No material shall be placed in any section of the earth fill until the foundation for that section has been dewatered and suitably prepared and has been approved by the ENGINEER. When the existing earth foundation materials are determined by the ENGINEER to be suitable, the area shall subsequently be disced or otherwise scarified to a depth of at least 6 inches and recompacted in accordance with Section 31.03.B.4 so as to assure compaction, bonding with successive lifts, and insure against a potential plane of seepage. If the existing earth foundation materials are determined by the ENGINEER to be unsuitable, the CONTRACTOR shall remove these materials and replace them with approved material as directed by the ENGINEER. The CONTRACTOR will be allowed compensation for such “Removal and Replacement of Existing Unsuitable Soils” in accordance with Section 31.03.A.1. Excessive moisture content shall not in itself form the basis for classifying a material as “unsuitable”; suitability shall be judge on the physical and chemical makeup of the material, i.e., any material which contains excessive moisture but would otherwise be suitable shall not be eligible for additional compensation.

3. Earth Fill Materials - The material for fill construction shall consist of soil which is free of roots, vegetation, frozen material, material with high organic content, and other deleterious materials. Materials determined by the ENGINEER to be unsuitable for earth fill shall be disposed of in accordance with Section **Error! Reference source not found.**. The ENGINEER shall determine

which materials are suitable for earth fill and shall have the authority to designate where in the fill certain earth materials shall be placed even to the extent of locating the placement of individual loads.

4. Placing Earth Fills - To achieve uniform compaction, fill material should be deposited in horizontal lifts extending the entire width and length of the fill, as far as practical, having a thickness compatible with the equipment utilized. It is presumed the lift thickness shall not exceed 8" in loose condition unless demonstrated by the CONTRACTOR to the satisfaction of the ENGINEER that the stated compaction can be uniformly achieved with a greater thickness. Lifts shall be disced to thoroughly mix and blend the different soils or to obtain a uniform moisture content.

   The moisture content of the soil, when placed, shall be within ±3% of the optimum moisture content of the material except as otherwise approved by the ENGINEER and shall be compacted to a density no less than 90% of the maximum dry density at optimum moisture content as determined by "Tests for Moisture-Density Relations of Soils", ASTM D698. The density of the compacted fill shall be determined by the independent testing agency at regular intervals; "regular intervals" is a variable and shall be as determined by the ENGINEER for each specific fill site, depending upon the site and method of the fill operation and the degree of difficulty expected in obtaining compaction. The services, testing, and reports of the independent testing agency shall be furnished by the CONTRACTOR to the ENGINEER incidental to the cost of the contract.

   If the natural water content of the fill material does not fall within the range previously described, the CONTRACTOR shall mix, dry or moisten as necessary to achieve the specified moisture content.

   The CONTRACTOR shall maintain the fill in an approved manner until the final completion and acceptance of all the work under the contract.

5. Earth Fill Equipment - During all earth fill operation, the CONTRACTOR shall have at the site the following pieces of equipment:

   a. Disk Harrow of the tandem type.

   b. Sheep's Foot Roller having a minimum weight of 4,000 lbs per foot of roller length when fully loaded.

   c. Hand Tamper of either the pneumatic or mechanical variety. All earth fill equipment shall meet the approval of the ENGINEER.

6. Hand Compaction - Fill inaccessible to compaction equipment adjacent to pipes or structures shall be compacted by hand. The soil shall meet the requirements under Section 31.03.B.3 and shall have a moisture content, when thoroughly mixed, corresponding to that specified under Section 31.03.B.4.

   The soil shall be deposited in lifts not to exceed 4 inches loose measure and thoroughly compacted over the entire lift area with a pneumatic or mechanical tamping hammer. Special precautions shall be taken to achieve the compaction required without damage to the pipe or structure. Tamping equipment shall be subject to approval by the ENGINEER.

C. Backfill

1. General - This work shall consist of the construction of fills by the placement and compaction of select materials where located on the Drawings or specified herein with material previously excavated from the site or its equivalent.

2. Backfill Material - Except for specific fill materials (e.g., filter media fill), backfill materials shall be material previously excavated from the site, or equivalent material, which can be compacted to the specified densities. Soft or organic soils will not be acceptable material for backfill. All backfill material shall be free from lumps, clods, stones greater than the specified size, or frozen material. All material shall be from an approved source.

   Coarse aggregate specified in the following paragraphs shall consist of tough, durable particles, reasonably free from objectionable material. Fine aggregate shall be reasonably free from an excess of soft and unsound particles and other objectionable matter.

   All material used, regardless of the source of supply, shall meet the gradation limits specified. The gradation of material from any one source shall be reasonably parallel to the gradation specified and shall not be subject to the extreme percentages of gradation represented by the tolerance limits for the various sieve sizes.

   Prior to ordering any select backfill materials, the CONTRACTOR shall furnish the ENGINEER written verification from an independent testing laboratory stating the material to be used is in compliance with these Specifications.

3. Drainage Granular Backfill - This shall be gravel, crushed gravel, pit run gravel, or crushed stone and shall conform to the following gradation requirements:

Sieve Size	Percent Passing
3/4”	100
1/2”	97±3
3/8”	80±10
No. 4	35±15
No. 16	3±3

4. Structural Granular Backfill (Types I and II) - Type I structural granular backfill, not less than 4” in compacted thickness, shall be used under concrete slabs and shall be gravel or crushed stone, conforming to the following requirements:

   a. Sodium Sulfate, Soundness Five Cycle Test, ASTM C88, maximum percent loss - 20%

   b. Los Angeles Abrasion Test, ASTM C131, maximum percent loss - 40%

   c. Minus #200 Material, ASTM C117, maximum percent - 2.5%

   d. Deleterious Materials -

      (1) Shale, maximum percent - 4%

      (2) Clay, lumps, maximum percent - 0.5%

      (3) Soft and unsound fragments, maximum percent - 8%

      (4) Total deleterious material, maximum percent - 10%

   e. Gradation -

Sieve Size	Percent Passing
1-1/2”	100
1”	95±5
½”	45±15

No. 4	5±5

5. Type II structural granular backfill for use around structures or for filling deep areas beneath structures shall be stone, stone sand, stone screen, chat, wet bottom boiler slag, or slag sand. It shall be reasonably free from an excess of soft and unsound particles, shale, clay, etc.., and shall conform to the following quality requirements:

   a. Sodium Sulfate, Soundness Five Cycle Test, ASTM C88 Maximum percent loss -20%

   b. Minimum No. 200 Material, ASTM C117, maximum percent - 10%

   c. Gradation -

Sieve Size	Percent Passing
No. 4	92±8
No. 100	10±10
No. 200	5±5

6. Compaction - Granular materials shall be compacted by vibratory compactors of sufficient capacity to obtain the specified degree of compaction. Vibratory compactors will not be acceptable for compaction of cohesive soils. No compaction by water soaking will be permitted unless authorized by the ENGINEER.

   Special care shall be taken in backfill adjacent to waterproofing or foundation walls to avoid damage to the waterproofing. Pipes and drains entering and leaving the structure shall be protected from settlement.

   All backfill shall be compacted according to the following classifications:

   a. Class A Compaction: Class A compaction shall consist of compacting the material to a density no less than 95% of the maximum dry density at optimum moisture content as determined by "Moisture-Density Relations of soils", ASTM D698. Class A compaction shall be used for all drainage granular backfill, structural granular backfill, and all other backfill except under lawn areas. Material shall be placed in lifts of such thickness that uniform compaction of the degree specified above will be obtained.

   b. Class B Compaction: Class B compaction shall consist of compacting the material to a density not less than 85% of the maximum dry density at optimum moisture content as determined by ASTM D698. Class B compaction shall be used for all backfill under lawn areas. Material shall be placed in lifts of such thickness that uniform compaction for the degree specified above will be obtained.

D. Structural Excavation and Backfill

1. Structural Excavation - All footing shall be founded on firm undisturbed soil, and a 6 inch minimum thickness of structural granular backfill shall be placed under all concrete bottom slabs of structures. Excavations shall be carried deep enough to permit the minimum thickness of granular material to be placed or until firm undisturbed soils are encountered, whichever requires greatest depth. For requirements for granular material, see Section 31.03.C.

   In no case shall any footings be founded above those elevations shown on the Drawings. If soft or unsuitable soil is encountered at elevations where footings are to be founded, the ENGINEER may direct the CONTRACTOR to remove the unstable materials and bring the excavation to grade with fill concrete or structural granular backfill (see Section 31.03.C). Additional

compensation will be made to the CONTRACTOR for such removal and replacement work as described in Section 31.03.A.1.

Excavations carried below depths shown on the Drawings shall be brought to grade by the CONTRACTOR with fill concrete or structural granular backfill. No additional compensation will be allowed for excavations carried below depth shown on the Drawings unless such excavations are ENGINEER approved "Removal and Replacement of Existing Unsuitable Soils" which will be compensated for in accordance with Section 31.03.A.1.

The excavation will be large enough to allow for installation and removal of forms. Side forms will not be require for footings or edges of base slabs below grade, provided the soil is stable and square corners and straight and plumb sides are maintained until concrete is placed and approval of the ENGINEER is obtained. All other excavation shall allow for placement and removal of forms and inspection.

Special care shall be taken not to disturb the bottom of excavations where the soil is to provide bearing for slabs, footing, etc. If the presence of subsurface water or other conditions, which may decrease the bearing strength of the foundation material, prevail then soil adequate to protect the foundation material shall not be excavated until just before reinforcing steel and concrete are to be placed. The bottom of all excavations shall be inspected and approved by the ENGINEER before the placement of any granular material, reinforcing steel, or concrete.

2. Shoring - The CONTRACTOR shall furnish, install and remove all shoring, bracing, sheet piling or other required work necessary to retain banks of excavation, prevent cave-in of adjacent ground, and support and prevent displacement of adjacent structures of piping.

   All shoring shall be maintained in good condition and removed when no longer required. The CONTRACTOR shall make good any injury or damage resulting from failure of the shoring system or from not observing these requirements.

3. Dewatering - The CONTRACTOR shall, at all times, during construction, provide, maintain, and operate as needed ample means and devices with which to promptly remove and properly dispose of all water entering the excavation in a manner that keeps the excavation dry and foundation bearing areas undisturbed until the structure is complete and all backfill has been placed. No extra compensation for dewatering or drainage necessary to meet this specification will be allowed.

   Sumps, if used, shall be located outside of load bearing areas and at such distance that the bearing surfaces will not be damaged. Water containing silt in suspension shall not be pumped into any sewer lines or discharged to state waters.

4. Structural Backfill - No backfilling shall begin without the approval of the ENGINEER. Unless otherwise shown on the Drawings or specified herein, backfill shall be structural granular backfill except for structures on or in earthen dikes, then backfill shall be Class A compacted, select excavated earthen materials.

   All form work, rubbish, bracing, and sheeting shall be removed from the excavation before any backfill is placed. The placement of backfill around structures or walls shall be done simultaneously on opposite sides in even lifts. No backfill shall be placed behind any wall until the entire main structure of which that wall is a part is complete and until all concrete in the main structure has reached its specified 28 day strength, unless approved otherwise in writing by the ENGINEER. Small flow channels and other such appurtenances will not be considered as being part of the main structure. Sloping sides of the excavation which would be liable to cause wedging action shall be stepped or serrated. Under no circumstances shall backfill be placed in water.

Around all structures where adjacent finished grade is to be exposed to the weather, backfill shall be carried to 2 feet 6 inches below finished grade. A 2 foot layer of clayey soil approved by the ENGINEER shall be placed over the full area of the excavated space outside the structure, compacted, and pitched to drain water away from the structure. The area shall then be finish graded in accordance with Section 207 of the Illinois Standard Specifications for Road and Bridge Construction, unless amended herein.

E. Roadway Grading

Intentionally Blank

F. Finish Grading

Intentionally Blank.

31.04. PAVING AND SURFACING

Intentionally Blank.

31.05. SITE IMPROVEMENTS

Intentionally Blank.

31.06. LANDSCAPING

Intentionally Blank.

31.07. FENCING

Intentionally Blank

31.08. DEMOLITION, SALVAGE, AND ABONDONMENT

Intentionally Blank

31.09. EROSION CONTROLS

Intentionally Blank

31.10. ROCK EXCAVATION

Intentionally Blank

31.11. UNSUITABLE BACKFILL MATERIAL

All backfill material up to a height of 12 inches above the pipe shall be free from rocks greater than 3 inches in diameter and 5 inches in length, frozen material, clubs, stumps, debris, etc.

Where there is a deficiency of suitable backfill material due to a rejection of part or all of the excavated material as unsatisfactory for backfill purposes, the CONTRACTOR shall furnish satisfactory backfill material wasted from trench excavation in other locations or from other sources furnished by the CONTRACTOR.

Where creek gravel, shelf rock, boulders, etc., removed by conventional methods, are encountered in the pipe installation process, all loose rock shall be removed from the bottom of the trench before the pipe is laid. The pipe shall be bedded in 6 inches of suitable backfill material. The initial backfill up to a depth of 16 inches above the pipe shall consist of suitable backfill.

The CONTRACTOR shall be responsible for disposal (hauling away) of any/all unsuitable backfill material that may not be utilized on the job site

Backfill furnished and work performed (including disposal operations) under these circumstances shall be incidental to the contract price.

INSTALLATION OF WATER MAIN AND APPURTENANCES

Table of Contents

Section 41

41.01. SCOPE OF WORK 41-1
41.02. CONSTRUCTION METHODS 41-1
41.03. EXCAVATION (TRENCH METHOD) 41-1
41.04. BACKFILLING (TRENCH METHOD) 41-1
41.05. DRAINAGE DITCH / CREEK CROSSINGS 41-2
41.06. WATER MAINS AND WATER SERVICE LINES NEAR SEWERS 41-2
41.07. PRESSURE TESTING OF WATER MAIN AND EQUIPMENT 41-2
41.08. DISINFECTION OF WATER MAIN 41-3
41.09. THRUST BLOCKS 41-4
41.10. DEWATERING 41-4
41.11. ADJUSTING UTILITIES 41-5
41.12. REMOVING FIRE/FLUSHING HYDRANTS 41-5
41.13. CUTTING-IN TEES, VALVES, AND CAPS 41-5
41.14. INSTALLING OFFSET FIRE/FLUSHING HYDRANTS WITH GATE VALVE 41-5
41.15. WATER MAIN CONNECTION TO STRUCTURES 41-5
41.16. FIELD TILE REPAIR 41-5
41.17. OPEN-CUT STEEL CASING 41-5
41.18. OPEN-CUT PVC CASING 41-5

Intentionally Blank

INSTALLATION OF WATER MAIN AND APPURTENANCES

Section 41

41.01. SCOPE OF WORK

The work to be performed under this section shall include all materials, labor, equipment, and all other facilities necessary for the installation of the water mains by the trench method and for the installation of appurtenances as shown on the drawings and/or herein specified.

41.02. CONSTRUCTION METHODS

Construction methods recommended in the current edition of the Standard Specifications for Water and Sewer Main Construction in Illinois, as far as applicable, shall be followed. In case of conflict with the Standard Water and Sewer Specifications, these Technical Provisions shall govern. Installation methods shall also conform to the manufacturer's recommendations for the type of pipe being installed, unless specified differently in this Section. All construction and installation shall also comply with the most recent version of the Illinois State Plumbing Code.

For installation criteria specific to the material type of water main to be utilized, refer to Section 51 “Water Main, Fittings, and Appurtenances” of these Specifications.

41.03. EXCAVATION (TRENCH METHOD)

The trench shall be excavated so that the water main will have a minimum of 42 inches of cover, unless a road or railroad permit requires a greater depth. Where a firm foundation is not encountered at the grade established, due to soft, spongy, or other unsuitable soil, all such unsuitable soil under the pipe and for the width of the trench shall be removed and replaced with well compacted select granular backfill, hereafter referred to as “trench backfill”.

The cost of furnishing and placing trench backfill for the purpose as described above, will be considered as incidental work and no additional compensation will be allowed.

The CONTRACTOR when installing water main12” or larger, shall dig out around the bell of the water main to allow the entire length of the pipe to lay on firm soil.

41.04. BACKFILLING (TRENCH METHOD)

Where water mains are crossing open areas where early settlement is not critical, backfill shall be made by any acceptable method which will not dislodge or damage the pipe or cause bridging action in the trench. Excavated material or material from other sources furnished by the CONTRACTOR free from clods (larger than 3 inches) or rock/stones shall be used in backfilling up to 12 inches above the top of the pipe (initial backfill). Excess material shall be neatly rounded over the top of the trench as directed by the ENGINEER to allow for settlement of the trench. In final cleanup operations, the CONTRACTOR shall reshape the surface to level out any uneven settlement that has occurred.

For backfilling under rigid and non-rigid surfaces, including sidewalks, streets, roadways, gravel driveways, and gravel field entrances, shall be SELECT GRANULAR BACKFILL for full depth of

trench. The initial backfill material shall be worked around and beneath the water pipe and properly compacted in suitable quantities until the pipe is completely covered and stabilized, before the final backfill is permitted. The final backfill shall be SELECT GRANULAR BACKFILL (CA-6 or equal) deposited for the remaining depth of the trench/excavation and compacted to the satisfaction of the ENGINEER.

Backfilling shall not be done in freezing weather without the permission of the ENGINEER, and it shall not be made with frozen materials. No backfill shall be made where the materials already in the trench are frozen.

Backfilling operations at fittings, gate valves, and hydrant locations shall not occur until all materials and work have been viewed by the OWNER, ENGINEER, or the Resident Project Representative.

No wood or plastic shall be allowed in the trench to shim or block out the water main, control the bend of a pipe, or discarded in the trench.

41.05. DRAINAGE DITCH / CREEK CROSSINGS

Intentionally Blank

41.06. WATER MAINS AND WATER SERVICE LINES NEAR SEWERS

Intentionally Blank

41.07. PRESSURE TESTING OF WATER MAIN AND EQUIPMENT

All tests and testing equipment, including a pressure gauge with maximum graduations of 5 psi and approved by the RPR, shall be provided by the CONTRACTOR at no cost to the OWNER. Prior to performance of the test all air shall be expelled from the pipeline to the satisfaction of the ENGINEER. This may be accomplished by means of hydrants or other means. If required, taps shall be made at high points where air relief valves are not called for on the drawings. Such taps shall be plugged after testing is complete. Pressure test and leakage test procedures should comply with the Standard Specifications, Section 41-2.14, except for the following "A key criterion for the pressure test is that the measured water pressure within the main(after reaching the required test pressure) should not vary by more than 5 psi during the duration of the test." shall be replaced with the following: "A key criterion for the pressure test is that the measured water pressure within the main(after reaching the required test pressure) should not vary from starting pressure during the duration of the test.". The leakage test is not an acceptable formal test for passing a water main, only the pressure test is allowable.

Pressure 50% in excess of working pressure, as measured at the point of lowest elevation, shall be applied for not less than 1 hour, and all pipe, fittings, valves, hydrants, and joints shall be carefully examined for defects. Leaking joints shall be remade and then retested.

The CONTRACTOR shall have the full test pressure applied to the water main segment, and verify that the water main segment is holding pressure, prior to notifying the resident project representative to observe the formal 1 hour pressure test. Pressure test observation requests after 3:30 P.M. will be performed the next working day.

In the event air is admitted to the pipeline after being expelled for the hydrostatic tests, such air shall be removed prior to completion of the system and acceptance by the OWNER. The air may be removed by the methods described in above. In no case shall the system be placed in operation prior to the removal of the air.

41.08. DISINFECTION OF WATER MAIN

A. Preliminary Flushing -

Intentionally Blank.

B. Bio-Penetrant Application

Intentionally Blank

C. Requirements of Chlorination –

Before being placed in service, all new mains or extensions to existing mains, shall be chlorinated, so that a chlorine residual of not less than 25 ppm remains in the water after 24 hours of standing in the pipe.

D. Point of Application –

The preferred point of application of the chlorinating agent is at the beginning of the pipeline extension, or any valve section of it, and through a corporation stop inserted in the top of the newly laid pipe.

E. Rate of Application –

Water from the existing distribution system or other source of supply, shall be controlled so as to flow slowly into the newly laid pipeline during the application of chlorine. The rate of chlorine mixture flow shall be in such proportion to the rate of water entering the pipe that the chlorine dose applied to the water entering the newly laid pipe shall meet the requirements listed in Section 41.08.C above. This may be expected with an application of 50 ppm, although some conditions may require more.

F. Preventing Reverse Flow –

Valves shall be manipulated so that the strong chlorine solution in the line being treated will not flow back into the line supplying the water.

G. Disinfection of Valves and Hydrants –

In the process of disinfecting newly laid pipe, all valves, or other appurtenances, shall be operated while the pipeline is filled with the chlorinating agent.

H. Disinfection of Booster Pumps, Pressure Reducing Valves, etc. –

Intentionally Blank

I. Final Flushing and Testing –

Following disinfection, all treated water shall be thoroughly flushed from the newly laid pipeline at its extremities until the replacement water throughout its length shall, upon test, be proved comparable in quality to the water served the public from the existing water supply system. All flushing operations shall be coordinated with the OWNER's licensed operator and may be regulated by the OWNERS licensed operator to prevent water loss/pressure to their customers.

After flushing, water samples collected on 2 separate days, at least 48 hours apart, from the treated piping systems at the designated testing points (indicated on the Sampling Plan included with the plan sheets), shall show satisfactory bacteriological results. The OWNER shall be present to witness the collection of all samples. Continuous flushing between the two samples shall not be allowed. Bacteriological analysis must be performed by a laboratory approved by the Illinois Environmental Protection Agency. The CONTRACTOR shall perform all testing and provide all bacteriological analysis results to the ENGINEER.

Once the CONTRACTOR has successfully obtained the 2 required new construction bacteriological samples, the OWNER, at their discretion and within 48 hours, will collect routine bacteriological samples from the same sample point for analysis. If the OWNER's test fails, then the CONTRACTOR shall repeat the new construction sample testing process for that specific location until both the CONTRACTOR's and the OWNER's samples pass. Any re-testing work by the CONTRACTOR shall be incidental to the Contract price.

All disinfection work and bacteriological sampling work shall be performed in the presence of the Resident Project Representative. Payment for bacteriological sampling will be made to the CONTRACTOR based on his line item bid price for each sample location. The CONTRACTOR's bid price for each sampling location shall include all necessary materials and labor to obtain 2 consecutive passing samples as described above.

41.09. THRUST BLOCKS

All bends of 11-1/4 degrees or greater, and all tees, plugs, reducers, fire hydrants, and flushing hydrants shall be thrust protected to prevent movement of the lines under pressure. Blocking shall be Portland Cement Concrete poured in accordance with Section 41.-2.09 of the Standard Specifications, or precast, solid blocking for small diameter pipe where the undisturbed soil is extremely firm and stable. Thrust blocking shall extend from the fitting to the undisturbed soil. Pipe and fitting joints shall remain accessible for repairs. Where unstable soil conditions exist, all deflections in the pipe from a straight line shall be provided thrust blocking in accordance with the manufacturer's recommendations. Concrete for reaction or thrust blocks shall have a 28 day compressive strength of not less than 3,000 psi. No wooden wedges, treated or otherwise, shall be allowed for shims for the blocking in any circumstance. PVC pipe may not be used in lieu of concrete blocks. Where a fitting is used to make a vertical bend, the fitting shall be anchored to a thrust block braced against undisturbed soil. The thrust block should have enough resistance to withstand upward thrusts at fitting.

41.10. DEWATERING

The CONTRACTOR shall at all times during construction provide, maintain, and operate as needed ample means and devices with which to promptly remove and properly dispose of all water entering the trenches or excavation. All trenches or excavation shall be kept dry until construction is complete. No foreign water shall be allowed to enter any pipe which has been laid. No water shall be allowed to stand over concrete until the concrete has set for at least 24 hours. This refers to thrust blocks, anchorages, foundations, etc..

If well pointing or the installation of temporary drains are required to complete the work, they shall be provided by the CONTRACTOR.

No additional compensation shall be made to the CONTRACTOR for any dewatering techniques, equipment or labor.

41.11. ADJUSTING UTILITIES

All utilities, including wiring, light standards, signal lights, sewers, private water lines, buried telephone cable, underground gas lines, etc., affecting the construction of the proposed improvement shall be adjusted at the CONTRACTOR's expense. It shall be the CONTRACTOR's responsibility to determine the exact location of all utilities. All adjustments shall be done as specified by the OWNER of the utility. If the CONTRACTOR damages any utility not requiring adjustment, he shall replace or repair it as required by the OWNER and no additional compensation will be allowed. No attempt has been made on the drawings to show all utilities or their exact locations.[(See Section 11.02 of these specifications.)]

41.12. REMOVING FIRE/FLUSHING HYDRANTS

Intentionally Blank

41.13. CUTTING-IN TEES, VALVES, AND CAPS

Intentionally Blank

41.14. INSTALLING OFFSET FIRE/FLUSHING HYDRANTS WITH GATE VALVE

Intentionally Blank

41.15. WATER MAIN CONNECTION TO STRUCTURES

Intentionally Blank.

41.16. FIELD TILE REPAIR

Intentionally Blank

41.17. OPEN-CUT STEEL CASING

Intentionally Blank

41.18. OPEN-CUT PVC CASING

Intentionally Blank

.

Intentionally Blank

WATER MAIN, FITTINGS, AND APPURTANENCES

Table of Contents

Section 51

51.01. SCOPE OF WORK 51-1
51.02. GENERAL INFORMATION 51-1
51.03. WATER MAIN PIPE – PVC SLIP JOINT 51-1
51.04. WATER MAIN PIPE – RESTRAINED JOINT PVC 51-2
51.05. WATER MAIN PIPE – DUCTILE IRON PIPE 51-2
51.06. HDPE PIPE 51-2
51.07. WATER MAIN FITTING 51-3
51.08. WATER MAIN PIPE LAYING 51-3
51.09. WATER MAIN APPURTENANCES 51-5
51.09.01 SERVICE LINE 51-5
51.09.02 HYDRANT 51-5
51.09.03 BUTTERFLY VALVES 51-5
51.09.04 GATE VALVES 51-5
51.09.05 VALVE BOXES 51-5
51.09.06 VALVE BOX MARKERS 51-5
51.09.07 COMBINATION AIR RELEASE VALVE 51-5
51.09.08 PLUGS AND CAPS 51-5
51.09.09 SAMPLE STATIONS 51-5
51.09.10 COPPER TRACER WIRE 51-5
51.09.11 TRACER WIRE ACCESS POINTS 51-6
51.09.12 TAPPING SLEEVE 51-6
51.09.13 LMI SERVICE LINE 51-6
51.09.14 DUCTILE IRON RESTRAINT GLANDS 51-6
51.09.15 ANCHOR COUPLING 51-6
51.09.16 SEPTIC ENCASEMENT MATERIAL 51-7
51.09.17 CASING SPACERS 51-7
51.09.18 WATER SERVICE CONNECTION 51-7
51.09.19 CORPORATION STOPS 51-7
51.09.20 SERVICE CLAMP/SADDLE 51-7
51.09.21 METER 51-7

51.09.22 REGULATOR 51-7
51.09.23 METER YOKE ASSEMBLY 51-7
51.09.24 METER BOX 51-7
51.09.25 METER COVER 51-7

WATER MAIN, FITTING, AND APPURTANENCES

Section 51

51.01. SCOPE OF WORK

The CONTRACTOR shall furnish all equipment, material, labor, standard fittings, skills, special fittings, couplings, etc., for the satisfactory installation of waterline.

The CONTRACTOR shall bid a lump sum price for the various different sizes, diameters and pressure ratings as indicated on the bidding proposal. All ductile iron fittings, couplings, adaptors, lubricants, gaskets, restrainers, and similar items shall be included in the lump sumbid price per lineal foot for water main and no additional compensation will be allowed for these items.

51.02. GENERAL INFORMATION

A. All pipe shall meet the specifications of the National Sanitation Foundation (NSF). The pipe manufacturer shall furnish certification in sufficient copies that the pipe supplied is in compliance with all requirements as specified herein.

B. Any bend in the water main greater than 11-degrees will require a mechanical joint, ductile iron elbow fitting with restrainers.

C. Samples of pipe, physical and chemical data sheets, shall be submitted to the ENGINEER, upon request, for approval and his approval shall be obtained before pipe is purchased.

D. The pipe shall be homogeneous throughout and free from cracks, holes, foreign inclusions or other defects. The pipe shall be as uniform as commercially practical in color.

E. Pipe must be delivered to the job site by means which will adequately support it and not subject it to undue stresses. In particular, the load shall be so supported that the bottom rows of pipe are not damaged by crushing. Pipe shall be unloaded carefully and strung or stored as close to the final point of placement as is practical.

F. Pipe shall be protected from truck exhaust during transportation.

G. Pipe shall be protected from crop spraying while stored on-site, or strung for installation, prior to installation.

H. The workmanship, pipe dimensions, and tolerances, outside diameters, wall thickness, eccentricity, sustained pressures, burst pressures, flattening, extrusion quality, marking and all other requirements of the Commercial Standards, CS 256-63.

I. At all times when work is not in progress, all open ends of pipe and fittings shall be securely closed with metal plugs or caps so that no trench water, earth, animal, or other substances may enter the pipe or fittings.

51.03. WATER MAIN PIPE – PVC SLIP JOINT

Intentionally Blank

51.04. WATER MAIN PIPE – RESTRAINED JOINT PVC

Intentionally Blank.

51.05. WATER MAIN PIPE – DUCTILE IRON PIPE

All ductile iron pipe shall be manufactured in accordance with all requirements of AWWA Standard C-151. Standard laying length is either 18 feet or 20 feet. All pipe shall meet the following thickness requirements:

Pipe Size (Nominal I.D.)	Minimum Thickness	Thickness Class	Pressure Class
3 inch	0.25 inch	51	
4 inch	0.26 inch	51	
6 inch	0.25 inch	50	
8 inch	0.27 inch	50	
12 inch	0.28 inch		350
16 inch	0.34 inch		350

The inside of the pipe shall be cement lined in accordance with AWWA Specification C-104, ANSI A 21.4, with a bituminous seal coat. All exterior surfaces of ductile iron pipe shall have a bituminous coating of either coaltar or asphalt base at least one mil thick.

Where/if the water main crosses an existing petroleum pipeline, slip-joint ductile iron pipe with hydrocarbon resistant gaskets shall be used for a length as required to obtain at least 25 feet clear distance from the water main to the petroleum pipeline.
Pipe joints shall be manufactured in accordance with the following specifications:

A. Mechanical joint pipe shall be furnished with applicable gaskets, glands, and bolts. Bolts shall be of Cor Blue or an equivalent ASTM A 242 material. Joint shall be in accordance with AWWA Standard C 110 and C 111.

B. Slip-joint pipe shall be furnished with gaskets and lubricant, and be in accordance with AWWA Standard C 111.

C. Restrained-Joint pipe joint shall be furnished with gaskets, restraining ring, and lubricant, and be in accordance with AWWA Standard C 153 and C 111 per Section 10.03.01.10.e.

Polyethylene encasement shall be used on all ductile iron pipes and the polyethylene encasement shall conform to ANSI/AWWA C 105/A21.5 Standards. Polyethylene material will deteriorate rapidly when exposed to direct sunlight. Store all polyethylene encasement out of the sunlight. If during the installation period it is anticipated that the polyethylene encasement will be exposed to sunlight for more than two weeks (ie. Open trench) Type C (black) polyethylene material must be used.

51.06. HDPE PIPE

Intentionally Blank

51.07. WATER MAIN FITTING

All ductile iron fittings shall conform to AWWA C 153, AWWA C 110, and AWWA C 111, 2 inch to 48 inch, for 250 psi water pressure plus water hammer. All fittings except plugs and sleeves shall be cement lined to conform to AWWA C 104 with a bituminous seal coat. Sleeves and plugs shall be bituminous seal coated. Application gaskets, standard transition gasket (SMJ gasket) for IPS PVC, mechanical joint restraining glands, and bolts shall be furnished. All bolts shall be Cor Blue or an equivalent ASTM A 242 material. Sleeves and plugs shall be bituminous seal coated.

A. Fittings include hydrants, gate valves, tees, elbows, crosses, reducers, caps, plugs, and wyes.

B. **All fittings associated with PVC or DI water main installation shall be ductile iron. All ductile iron fittings shall be mechanical-joint and utilize mechanical-joint restraining glands where anchor couplings are not required**.

C. Pressure rating of fittings shall be equal to or greater than the specified pipe.

D. Fittings shall be per Section 10.03.01.7.

E. Backfill operations at fittings, gate valves, and hydrant locations shall not occur until all materials and work have been viewed by the OWNER or RPR.

F. PVC Expansion Couplings

Intentionally Blank

G. Fittings for use with HDPE

Intentionally Blank

51.08. WATER MAIN PIPE LAYING

A. General: Only competent persons at laying water main pipe shall be employed on this phase of the work, and complete suitable equipment necessary for the execution of same is required. Any incompetency observed by the OWNER must be removed at his request, and where improper equipment or lack of same appears to be impairing the quality or speed of the work, such adjustments in same shall be made to the OWNER's satisfaction.

The pipe, fittings, and valves shall be placed in the trench with care. Under no circumstances shall pipe or other materials be dropped or dumped into the trench. The pipe shall not be dragged in a manner which would cause scratching on the surface of the pipe and will be considered cause for rejection. Pipe shall be installed in accordance with the manufacturer's recommendations, and with the Standard Specifications for Water and Sewer Main Construction in Illinois.

A full length of pipe shall be used where slip-joint pipe connects to a fitting or appurtenance. Where a full length of pipe cannot be utilized for any reason, a UFR Series 1350 joint restraint, for PVC or equal for DI, manufactured by The Ford Meter Box Company, Inc, shall be used at the first joint from the fitting such that the length of restrained pipe is greater than or equal to 20 feet.

All joints that result in a change of direction shall be restrained with a solid concrete thrust block in such a fashion so that the weight and thrust is transferred to the undisturbed soils of the trench. These solid thrust blocks shall be made of concrete and placed so that adequate bearing against undisturbed soil is provided.

B. Pipe Cleaning During Laying Operation: If dirt or dust has been introduced into the length of pipe, a thorough cleaning of the pipe shall be done just before the joint of pipe is installed. At this time a visual check shall be made by placing the pipe in an inclined position to assure that all foreign matter and dirt is removed from the inside of the pipe. The pipe shall be kept clean during and after laying. At the termination of pipe laying, the open end of the pipeline shall be closed off by a suitable cover until laying operations are resumed.

C. Inspection of Material During Construction: Any materials not meeting the specifications, or obviously faulty material, shall be rejected by the ENGINEER and removed from the job site by the CONTRACTOR. When ordered by the ENGINEER, joints may be cut from the pipeline for inspection. All ductile iron installation, whether pipe or fittings, shall be reviewed by the Resident Project Representative before the trench is backfilled. Failure to allow for this observation shall result in the exposing of the pipe for review, and shall be incidental to the contract price.

D. Fluid Tight Joints: All dirt, debris, and moisture shall be removed from the surfaces to be jointed. Make sure the gasket is not twisted or turned to prevent proper sealing in the groove. Apply the lubricant to the gasket surface and to the spigot end of the pipe. The joint is made by one quick easy motion making sure the guide mark has reached the end of the fitting. For restrained-joint pipe, the contractor should then inserting the nylon spline through the spline hole in the assembled joint which engages with the spline groove in the pipe end.

E. Breaks in Pipe or Joints: All breaks in pipe and/or joints shall be repaired to the satisfaction of the ENGINEER and at the expense of the CONTRACTOR. The defective pipe or fittings shall be removed and replaced. Repair clamps will not be permitted.

F. Cutting Pipe: Cutting of RJ pipe shall not be allowed; only the installation of full length pipe shall be allowed. The only exception to this is when restrained-joint pipe is connecting to a fitting. In this case the restrained-joint pipe may be cut to the necessary length and appropriate UFR used on the restrained-joint at the fitting.

G. Bed and Cover: Each section of pipe in the trench shall rest upon the pipe bed for the full length of its barrel. The bottom of the trench shall be free from rocks, clods, or other sharp-edged objects. The subgrade upon which the pipe is placed shall consist of material suitable for supporting the pipe without excessive settlement or stress development.

   If the pipe is to be laid in a trench having a rock bottom, bedding shall be as specified in Section 31.10.

   Initial and final backfill shall be as specified in Section 41.04.

   Service lines and laterals must be assembled so that no strain is placed on the pipe during or after backfill operation. After laying of the pipe is completed, it shall be center loaded with backfill to prevent arching and whipping under pressure. Center loading should be done carefully so that joints will be completely exposed for examination during testing, unless conditions warrant complete backfill before testing.

H. Preliminary Pressure Testing: At the ENGINEER's option during the general construction period the following pressure testing procedure shall be followed:

   After the PVC pipe is assembled trench side or in the trench, a test of not less than 50% above the system's anticipated working pressure shall be applied with either air or water. After two consecutive tests have been performed without any failure, the CONTRACTOR at his option and with the ENGINEER's approval may discontinue testing until the system is completed. A hydrostatic test shall then be run as outlined in paragraph I, this section.

If there is a change of laying conditions, technique or personnel after the testing has been discontinued the CONTRACTOR should, and at the ENGINEER's request will, test additional sections to provide assurance that this change is satisfactory.

I. Pressure Testing: Hydrostatic and pressure testing shall conform with Section 41, “Pressure Testing of Water Main and Equipment”.

J. Measurement and Payment: Payment for all work described in this section shall be included in the CONTRACTOR's lump sum bid price.

K. Service Connections:

Intentionally Blank

L. Polyethylene encasement shall be used to wrap the ductile iron pipe prior to installation. See section 51.03 for specifications on the polyethylene encasement.

51.09. WATER MAIN APPURTENANCES

51.09.01 SERVICE LINE

Intentionally Blank.

51.09.02 HYDRANT

Intentionally Blank

51.09.03 BUTTERFLY VALVES

Intentionally Blank

51.09.04 GATE VALVES

Intentionally Blank

51.09.05 VALVE BOXES

Intentionally Blank

51.09.06 VALVE BOX MARKERS

Intentionally Blank

51.09.07 COMBINATION AIR RELEASE VALVE

Intentionally Blank

51.09.08 PLUGS AND CAPS

Intentionally Blank

51.09.09 SAMPLE STATIONS

Intentionally Blank

51.09.10 COPPER TRACER WIRE

Copper tracer wire shall be installed with all PVC raw and finished water main, and service lines (up to the service meter). The wire shall be copper-clad steel wire coated with HDPE and shall be connected to all valves and brought up into each valve box (on the exterior of the box, and doubled-over under the cover on the interior), and shall be connected to all hydrants and service meter pits,

creating a continuous wire throughout all water main and appurtenances. [All splices of tracer wire shall utilize direct bury splice kits per Section 10.03.01.5.c. During installation of the connector, the CONTRACTOR shall tie the tracer wire into a knot and leave approximately 4 inches to be inserted into the connector per manufacture's specifications. The CONTRACTOR shall install tracer wire per Section 10.03.01.5.a. for water main installed by trenching and per Section 10.03.01.5.b. for water main installed by directional boring. The Contractor shall include in his bid price for water main installation all costs associated with tracer wire installation.

Substantial completion will not be issued to the CONTRACTOR until it has been verified by the OWNER that all tracer wire is continuous and can be field located with the OWNER's locating equipment.

51.09.11 TRACER WIRE ACCESS POINTS

Intentionally Blank

51.09.12 TAPPING SLEEVE

Intentionally Blank.

51.09.13 LMI SERVICE LINE

Intentionally Blank

51.09.14 DUCTILE IRON RESTRAINT GLANDS

Restraint for PVC and ductile iron pipe joined with standardized mechanical joint fittings shall be incorporated in the design of the follower gland and the PVC pipe restraining glands shall provide full circle contact and support of the pipe wall. Restraint shall be accomplished by a series of ring segments mechanically retained inside the gland housing and designed to grip the pipe wall in an even and uniform manner. Restraining ring segments shall be actuated by bolts featuring twist off heads. All components of the restrainer, including the gland bolts, and restraint segments shall be of high strength ductile iron, ASTM A536, Grade 65-45-12. Restraining devices shall be UL Listed/FM Approved on AWWA C-900 PVC pipe and shall be certified by an independent testing facility as meeting or exceeding ASTM F1674-96 Standard Test Method for Joint Restraint Devices for PVC Pipe. Restraining devices shall be per Section 10.03.01.11.a. with standard transition gaskets (SMJ) for PVC IPS pipe and for Ductile Iron pipe shall be per Section 10.03.01.11.b. Joint restraints shall be used at all fittings, gate valves, and hydrants, not requiring an anchor coupling, and shall be incidental to the contract price. Restraints shall be rated at a minimum of 200 psi.

51.09.15 ANCHOR COUPLING

Restraint of pipe between gate valves and hydrants and between tees or other fittings and gate valves shall be accomplished utilizing ductile iron anchor couplings. Anchor couplings shall be designed to conform to the following provisions;

DI Pipe Barrel:	ANSI/AWWA C151/A21.51 Class 53
Groove Depth:	AWWA C606 Table 1
DI Retaining Ring:	ANSI/AWWA C151/A21.51
DI Swivel Follower:	ANSI/AWWA C110/A21.10 Compatible.

Wall thickness beneath the groove shall exceed the minimum referenced in ANSI/AWWA C150/A21.50 Table 50.13 "Thickness for Internal Pressure", for 350 psi rating plus a surge

allowance of 100 psi. The pipe shall be furnished with a bituminous exterior coating per ANSI/AWWA C151/A21.51 and cement mortar lined and seal coated per ANSI/AWWA C104/A21.4.

51.09.16 SEPTIC ENCASEMENT MATERIAL

Intentionally Blank

51.09.17 CASING SPACERS

Intentionally Blank

51.09.18 WATER SERVICE CONNECTION

Intentionally Blank

51.09.19 CORPORATION STOPS

For pressure regulating and non-pressure regulating service connections measuring 5/8" x 3/4" and 1", a corporation stop size of 1 inch shall be used. The ball valve shall be brass, shall be per Section 10.03.01.18.a., taper thread by Conductive Compression Connection for CTS tubing, and shall be of ball valve design for use with a compression fitting and stainless steel insert. No flaring of polyethylene pipe will be allowed.

For pressure regulating and non-pressure regulating service connections measuring 1-1/2" and 2" a corporation stop size of 2 inch shall be used. The ball valve shall be brass, shall be per Section 10.03.01.18.b, taper thread by Packed Joint outlet for PVC pipe, and shall be of ball valve design. A 2 inch gate valve (per Section 10.03.01.18.c. MJ) with a valve box shall be installed near the corporation stop.

51.09.20 SERVICE CLAMP/SADDLE

Service clamps shall be bronze, strap-type as required for the size of corporation stop as specified, and shall be per Section 10.03.01.12 and as approved by the ENGINEER. The use of solvent weld plastic saddles will not be permitted. The service clamps shall be located on the pipe such that the tap location is between 8 and 10 o'clock or between 2 and 4 o'clock as seen on the cross section of the pipe unless physical elements of the trench warrant otherwise and the deviation is approved by the ENGINEER. Whenever possible, corporation stops shall be placed in plastic lines before conducting hydrostatic tests.

51.09.21 METER

Intentionally Blank

51.09.22 REGULATOR

Intentionally Blank

51.09.23 METER YOKE ASSEMBLY

Intentionally Blank

51.09.24 METER BOX

Intentionally Blank

51.09.25 METER BOX COVER

Intentionally Blank.

Intentionally Blank

Glass Coated, Bolted-Steel Ground Storage Tank

Table of Contents

Section 72

72.01. SCOPE OF WORK 72-1
72.02. EXPERIENCE 72-1
72.03. SHOP DRAWINGS 72-1
72.04. FOUNDATIONS 72-2
72.05. COMPONENTS AND DESCRIPTION 72-3
72.06. GUARANTEE 72-8
72.07. INSPECTION 72-8
72.08. HYDROSTATIC TESTING 72-9
72.09. DISINFECTION OF TANK 72-9
72.10. WATER USED BY CONTRACTOR 72-10
72.11. COATING FOR CONCRETE FLOOR ALT. A BASE BID “A” 72-10
72.12. CATHODIC PROTECTION 72-10
72.13. STORAGE TANK MIXING SYSTEM 72-10

Intentionally Blank

Glass Coated, Bolted-Steel Ground Storage Tank

Section 72

72.01. SCOPE OF WORK

A. The CONTRACTOR shall furnish all equipment, machinery, materials, skills, tools and labor for the design, fabrication and erection of one (200,000 gallon) glass-coated bolted-steel water storage tank complete with foundation and accessories, of the capacity and dimensions as specified in the Drawings, and as specified herein. The storage tank shall be glass-coated bolted-steel water storage tank as manufactured by Cady Aquastore, Inc., or equal, in accordance with AWWA D103 - 19. The storage tank structural and foundation design shall incorporate an expandability feature, allowing the tank's capacity to be increased to a minimum of 400,000 gallons in the future, by increasing the sidewall height only (i.e., no foundation changes or bottom sidewall ring (starter ring) changes shall be required) The tank bottom shall be concrete for Base Bid "A" and bolted steel for Base Bid "B"

B. The ENGINEER's selection of factory applied glass-fused-to-steel bolt together tank construction for this facility has been predicated upon the design criteria, construction methods specified, and optimum coating for resistance to internal and external tank surface corrosion. Deviations from the specified design, construction, or coating details will not be permitted.

C. The exterior tank color shall be Cobalt Blue - Munsell standard 7.5 PB 2/4.

D. All bidders shall furnish with their bid a sketch of the foundation showing the rebar schedule and concrete requirements. Any bid not furnishing a sketch with the proper information will not be accepted.

E. All bidders shall furnish with their bid a sketch of the tank showing the steel strengths and thicknesses. Any bid not containing a sketch with the proper information will not be accepted.

72.02. EXPERIENCE

The Tank manufacturer shall submit to the ENGINEER/OWNER along with their bid a list of five (5) references for work preformed for water/waste water tanks presently in service, of size and character specified herein.

72.03. SHOP DRAWINGS

The CONTRACTOR shall furnish a detailed set of Drawings, and/or specifications showing the type and pertinent information of the proposed tanks, foundation design and details, and the methods of construction, to the ENGINEER for approval before fabrication and/or construction.

All such submissions related to the foundation, the tank, and tank appurtenances shall be stamped by a Registered Structural ENGINEER licensed in the state of the project location, as well as by a Registered Professional ENGINEER employed on the tank manufacturer's engineering staff.

In order for alternate equipment to be considered an “approved equal”, prospective suppliers must make a pre-bid submittal as detailed In Article 11 of the “Instructions to Bidders”. Substituted and “or-equals” submitted after bids are opened will not be considered.

72.04. FOUNDATIONS

A. The CONTRACTOR shall design and construct a foundation for the tank in accordance with AWWA D103 – 19. The CONTRACTOR shall furnish, for approval of the ENGINEER, and at no increase in contract price, six (6) sets of complete specifications and construction drawings for all work not shown in complete detail on the bidding drawings. A complete set of structural calculations shall be provided for the tank structure and foundation. All such submissions shall be stamped by a Registered Structural ENGINEER licensed in the state of the project location, as well as by a Registered Professional ENGINEER employed on the tank manufacturer's engineering staff.

The Base Bid “A” floor design is of reinforced concrete with an embedded glass coated steel starter sheet per the manufacturer’s recommendations. Leveling of the starter ring shall be required and the maximum differential elevation within the ring shall not exceed one-eighth (1/8) inch, nor exceed one-sixteenth (1/16) inch within any ten (10) feet of length. A leveling plate assembly (US Patent No. 4,483,607), as shown in the drawings can be used to secure the starter ring prior to encasement in concrete. Installation of the starter ring on concrete blocks or bricks, using shims for adjustment is not permitted. Place one butyl rubber elastomer water stop seal on the inside surface of the starter ring below concrete floor line. Place one bentonite impregnated water seal below the butyl rubber seal. Install materials according to manufacturer’s instructions.

The Base Bid “B” bolted steel floor- the floor is to be a glass-coated bolted steel floor. Bolted steel panels shall be placed over a compacted gravel based contained by a concrete ringwall, or a concrete slab with a non-extruding and resilient bituminous type filler meeting the requirements of ASTM D1751 placed between the tank floor and gravel base to act as a cushion.A plastic encapsulated nut shall be used to cover the bolt threads exposed on the inside of the floor. The plastic encapsulation shall be Noryl GFN2-701S.Leveling of the starter ring shall be required and the maximum differential elevation with in the ring shall not exceed one-eighth (1/8) inch mor exceed one-sixteenth (1/16) inch within any ten (10) fee of length.

Earth excavation and compacted rock backfill is considered incidental to concrete for foundations.

A copy of the concrete design mix, approved by the CONTRACTOR’s structural engineer, shall be provided to the ENGINEER. Refer to section 21 of the specifications regarding concrete test requirements.

The CONTRACTOR shall have an independent soils consultant verify that the foundations subgrade meets or exceeds the recommendation of the geotechnical report, and shall be incidental to the contract price. Additionally, any construction observation required for a deep foundation alternative (drilled piers, driven piles, GEOPIER® foundations, etc.) shall be provided by a geotechnical consultant, and shall be incidental to the contract price.

The coating for the concrete floor shall be per section 72.10.

B. The ductile iron inlet pipe connections shall consist of fittings and a tide flex valve model Series 35 of the size specified on the drawings. The outlet connection shall include a removable silt stop at least four inches (4") high. When the silt stop is removed, the fitting or pipe connection shall be flush with the tank floor. The ductile iron inlet and outlet piping shall be coal-tar enamel lined and

coal-tar enamel coated and taped in accordance with AWWA C203, or approved equal lining and coating method.

72.05. COMPONENTS AND DESCRIPTION

A. Plates and Sheets

All steel products to be used in the manufacture of the tank shall be manufactured or produced in the United States, in accordance with the American Iron and Steel Act (AIS) The tank manufacturer shall provide documentation, upon request, including mill reports and traceable documents to demonstrate the source of steel used in the tank manufacture.

Plates and sheets used in the construction of the tank shell, tank floor (when supplied) and tank roof (if steel), shall comply with the minimum standards of AWWA D103 -09. Design requirements for mild strength steel shall be ASTM A1011 Grade 30 with a maximum allowable tensile stress of 14,566 psi. Design requirements for high strength steel shall be ASTM A1011 Grade 50 with a maximum allowable tensile stress of 26,000 psi. The annealing effect created from the glass coated firing process shall be considered in determining ultimate steel strength. In no event shall a yield strength greater than 50,000 psi be utilized for calculations as detailed in AWWA D103 -19, Sections 5.4 and 5.5. When multiple vertical bolt line sheets and plates of ASTM A1011 Grade 50 are used, the effective net cross section area shall not be taken as greater than 85% of the gross area.

The tanks shall be of all bolted construction with an aluminum roof and steel or concrete floor. The net capacity of the tanks shall be as measured from point of overflow to the bottom of the tank. The roof shall be a clear span aluminum geodesic dome with watertight construction.

B. Tank Design – AWWA D103 -19

Specific Gravity 1.0

Wind Velocity 100 mph

Allowable Soil Bearing Loading 1500psf (Per Eng.'s Soils Report)

Roof Snow Load 25 psf

Design Freeboard _12_ inches

Earthquake Seismic Design . AWWA D103-19

Design Earthquake	7.7
Modified PGA_M	0.185

Seismic Design Parameters (IBC 2015)

Site Class	C
F_a	1.2
F_v	1.665
S_{DS}	0.248
S_{D1}	0.15

Seismic Design Category (SDC)

C. The inside ladder shall constructed of fiberglass and the rungs shall be reinforced with stainless steel or aluminum. The inside ladder shall include a Saf-T-Climb fall prevention safety device as manufactured by Air Space Devices, Inc., P.O. Box 138, Paramount, CA. 90733, or equal

D. A protective ladder gate shall be furnished and installed by the CONTRACTOR to the ladder assembly. The gate shall be at least 8 feet high, constructed of aluminum, and prevent unauthorized access to the ladder. It shall be hinged on one side, capable of being opened easily by one person on the ladder beneath it, and be provided with a mechanism for locking the gate in both open and closed positions. The gate shall be as manufactured by R.B. Industries, P.O. Box 4734, Greensboro, NC 27404 ph. 336-852-6276 or Leary Construction Company, Greenfield, IN 46140, or equal. The gate shall not conflict with the proposed safety climb device.

The outside ladder shall also be equipped with a Saf-T-Climb fall prevention safety device as manufactured by Air Space Devices, Inc., P.O. Box 138, Paramount, CA. 90733, or equal. Shop drawings shall include complete details and specifications of the fall prevention device.

E. Step-off platforms and safety cages shall be fabricated of galvanized steel.

F. Aluminum Geodesic Dome

The roof shall be constructed of non-corrugated triangular aluminum panels which are sealed and firmly clamped in an interlocking manner to a fully triangulated aluminum space truss system of wide flange extrusions, thus forming a dome structure.

The roof shall be a dome structure conforming to AWWA Standard D103 - 19. The dome shall conform to the dimensions of the tank using a fully triangulated space truss and non-corrugated closure panels. It shall be clear-span and designed to be self-supporting from the periphery structure with primary horizontal thrust contained by an integral tension ring. Provision shall be made in the design for thermal expansion of all dome parts over a temperature range of -40°F to +140°F. The dome dead weight shall not exceed 3.5 pounds per square foot of surface area.

The dome surface paneling shall be designed as a watertight system under all design load and temperature conditions. All raw edges of the aluminum panels shall be covered, sealed, and firmly clamped with batten bars in an interlocking manner to prevent slipping or disengagement under design load and temperature changes.

The roof framing system shall be designed as a three-dimensional truss with moment-resisting joints. The design must consider the increased minor axis bending and compression induced in the framing members due to tension in the roof panels.

The manufacturer shall furnish a 30” x 30” roof hatch which shall be placed near the outside tank ladder and which shall be provided with a hinged cover and fitted with an appropriate locking device. The roof hatch shall extend four inches (4") to six inches (6") above the tank roof and a gasketed weather-tight cover which overlaps the framed opening shall extend down around the frame at least two inches (2").

The dome and tank shall be designed to act as an integral unit. The tank shall be designed to support an aluminum dome roof including all specified live loads. The structural analysis shall be performed using stiffness analysis models. The structural computer models shall include the effect of geometry irregularities such as dormer openings and perimeter support members.

Connection forces shall be transferred through gusset plates connected to the top and bottom flanges of the beam-struts. The connections shall be designed as moment connections; a minimum of four Huck® lockbolts shall be used to connect the gusset plate to each strut flange.

All dome fasteners shall be designed with a safety factor of 2.34 on ultimate strength and 1.65 on yield strength.

The design of welded components shall be in accordance with the Aluminum Structural Welding Code ANSI/AWS D1.1/D1.2.

The vertical loads transferred from the roof to the tank shall be in-line with the tank wall. The transfer of horizontal loads to the tank shall be minimized by means of low friction slide supports. Radial forces applied to the tank shall not exceed 10% of the vertical reactions.

Dissimilar materials which are not compatible shall be isolated by an insulator to prevent galvanic corrosion. Passivated 300 series Stainless Steel is compatible to Aluminum.

An aluminum dome handrail system, single sided, shall be furnished and installed by the CONTRACTOR from the ladder assembly to the center of the dome. The dome surface where traffic is expected to walk shall have an adhesive backed anti-skid material applied. A partial perimeter handrail shall be furnished and installed by the CONTRACTOR on both sides of the ladder assembly. A safety cable shall also be installed from the outside ladder to the top of the tank.

G. A frost proof screened (#24 SS mesh) roof vent shall be provided, in accordance with AWWA D103 09. It shall be of adequate size to safely vent the tank such that excessive pressures will not build up under its maximum fill rate of 600 GPM and such that an excessive vacuum will not be produced at its maximum withdrawal rate of 4,500 GPM. The roof vent shall be designed to function properly if iced or frosted over, per Section 7.7.2 of AWWA D103 -19.

H. One twenty-four inch (24") diameter (minimum), hinged, manway access door and one thirty inch (30”) hinged manway access door shall be located approximately three feet (3') above the top of the foundation on opposite sides of the tank generally as shown on the drawings.

I. The tanks shall be equipped with an overflow pipe of seamless aluminum tubing construction using appropriate flanged or welded fittings. The pipe shall be supported at proper intervals with suitable brackets. The outlet shall be covered with #24 SS mesh. The pipe shall discharge at twelve inches (12") above ground level and be capable of discharging at least 4,500 GPM. The overflow shall not be included in the design of the roof vent. The overflow pipe shall include a Tideflex series 35 rubber check sleeve as manufactured by Red Valve Company, Inc., or equal. The sleeve shall be flanged, and connected to the bottom of the overflow pipe for safety/security purposes.

J. Glass Coating Specification

The tank coating system shall conform solely to Section 12.4 of ANSI/AWWA D103 -19.

Following the decoiling and shearing process, sheets shall be steel grit-blasted on both sides to the equivalent of SSPC-10 (Near–White Metal Blast Cleaning).

Sand blasting and chemical pitting of steel sheets is not acceptable.

The surface anchor pattern shall be not less than 1.0 mil (0.001 inches). These sheets shall be evenly oiled on both sides to protect them from corrosion during fabrication. After initial sheet preparation, all full size shell sheets and all rectangular shaped floor sheets shall be mechanically rounded with a 0.2-0.3” x 45 degree bevel. A metal coating of 316 SS shall be applied to the exposed sheet edges by an ARC thermal spray to a thickness of 1.5 - 5.0 mils. The coating shall have an adhesion tensile strength >1,500 psi per ASTM C633-79. The process shall be equal to EDGECOAT© by Engineered Storage Products Co..

The tank manufacturers coating process shall employ equipment that evenly coats the sheet surfaces and all (4) exposed sheet edges. A base coat of glass frit containing nickel oxide shall be applied to all 6 sides of the sheet.

Manufacturer shall maintain and use supplementary directional spray nozzles using an automated machine process to consistently coat the sheet edge profiles per PEI 101 standard. The sheet edges shall be coated with the same vitreous enamel glass coating system as the sheet surface.

1. All sheets shall receive one coat of a catalytic nickel-oxide glass precoat to both sides and then air dried.
2. Another coat of milled cobalt blue glass shall be applied to both sides of the sheets and then dried.
3. A third coat of milled titanium dioxide white glass shall be applied to all wetted surfaces which must be an 18 to 22 percent titanium dioxide reinforced mixture. The specified coating shall be Aquastore Vitrium. An acceptable alternate is the TriFusion coating or a three coat two fire system that must be submitted for approval prior to the bid.
4. The sheets shall then be fired at a minimum temperature of 1500° F in strict accordance with the manufacturer's ISO 9001 quality process control procedures, including firing time, furnace humidity, temperature control, etc.
5. The dry film interior coating thickness shall be 10.0 to 18.0 mils (0.010 to 0.018 inches) minimum. The finished inside color shall be white.
6. The dry film exterior coating thickness shall be 7.0 to 15.0 mils (0.007 to 0.015 inches) minimum.
7. The same glass coating as applied to the sheet surfaces shall be applied to the exposed edges.

K. Factory Inspection

1. The manufacturer's quality system shall be ISO 9001 certified.
2. Every batch of component first shall be individually tested in accordance with PEI Test T-21 (Citric Acid at Room Temperature).
3. A dry volt test using a minimum of 1100 volts is required. Frequency of the test shall be every sheet. Any sheet registering a discontinuity shall be rejected. All inside sheet surfaces shall be holiday free.
4. Glass thickness shall be measured using an electronic dry film thickness gage (magnetic induction type) approved by Cady Aquastore, Inc. The thickness gage shall have a valid calibration record. Frequency of the test shall be every tenth sheet. The thickness of the glass shall be between 10.0 and 18.0 mils (0.010 and 0.018 inches).
5. The exterior color of the sheets shall be measured using a colorimeter approved by Engineered Storage Products Company. The colorimeter shall have a valid calibration record. Frequency of the test shall be every tenth sheet. The color must fall within the tolerance specified by Engineered Storage Products Company, else the panel shall be rejected.
6. The adherence of the glass coating to the steel shall be tested in accordance with ISO 28765 class 2 or better. Any sheet that has poor adherence shall be rejected. Frequency of this test shall be one sheet per gage lot run minimum.

7. The glass coating shall be tested for fishscale by placing the full size production sheets in an oven at 400º F for one hour. The sheets will then be examined for signs of fishscale. Any sheet exhibiting fishscale shall be rejected and all sheets from that gage lot will be similarly tested. Frequency of this test shall be one sheet per gage lot run minimum.

L. Packaging

1. All sheets that pass Factory Inspection and Quality Control checks shall be protected from damage prior to packing for shipment.
2. Heavy paper or plastic foam sheets shall be placed between each panel to eliminate sheet-to-sheet abrasion during shipment.
3. Individual stacks of panels will be wrapped in heavy mil black plastic and steel banded to special wood pallets built to the roll-radius of the tank panels. This procedure eliminates contact or movement of finished panels during shipment.
4. Shipment from the factory will be by truck, hauling the tank components exclusively.

M. The following lettering shall be field installed vinyl lettering applied to the ground storage tank, **JCRWC**-Facing South with minimum letter height of thirty-six inches (36”). The location / orientation of the lettering shall be coordinated with the OWNER.

N. A stainless steel nameplate shall be affixed to the tank exterior sidewall at a location approximately five feet (5') from grade elevation and shall list the tank serial number, tank diameter, tank height, maximum design capacity, intended storage use, and date of installation.

O. Horizontal Wind Stiffeners

Design requirements for intermediate horizontal wind stiffeners shall be of the “web truss” design with extended tail to create multiple layers of stiffener, permitting wind loads to distribute around the tank. Web truss stiffeners shall be of steel with hot dipped galvanized coating. Rolled steel angle stiffeners are not permitted for intermediate stiffeners.

P. Bolt Fasteners

Bolts used in tank lap joints shall be 1/2"-13 UNC-2A rolled thread, and shall meet the minimum requirements of AWWA D103, Section 4.2.

Bolt Material

SAE J429 Grade 5(1” and 1-1/4” bolt length) heat treated to:

Tensile Strength - 120,000 psi Min.

Proof Load - 85,000 psi Min.

Allowable shear stress – 29,454psi.

SAE J429 Grade 8(>1-1/4” bolt length) heat treated to:

Tensile Strength - 150,000 psi Min.

Proof Load - 120,000 psi Min.

Allowable shear stress - 36,818 psi.

Bolt Finish - Zinc, mechanically deposited for a coating 2.0 Mils min under bolt head, on shank and threads.

Bolt Head Encapsulation shall consist of high impact polypropylene copolymer encapsulation of entire bolt head up to the splines on the shank. Resin shall be stabilized with an ultraviolet light resistant material such that the color shall appear black. The bolt head encapsulation shall be certified to meet the ANSI/NSF Standard 61 for indirect additives.

All bolts on the vertical tank wall shall be installed such that the head portion is located inside the tank, and the washer and nut are on the exterior.

All lap joint bolts shall be properly selected such that threaded portions will not be exposed to the "shear plane" between tank sheets.

Bolt lengths shall be sized as to achieve a neat and uniform appearance. Excessive threads extending beyond the nut after torqueing will not be permitted.

All lap joint bolts shall include a minimum of four (4) splines on the underside of the bolt head at the shank in order to resist rotation during torqueing.

72.06. GUARANTEE

The CONTRACTOR shall guarantee the structure against any defective material or workmanship for a period of five (5) years from the date of acceptance. If any materials or workmanship prove to be defective within five (5) years, they shall be replaced or repaired by the CONTRACTOR at his own expense.

The suppliers and erectors of all equipment, apparatus, and work furnished and used in the construction of this project shall and hereby do warrant, and the CONTRACTOR shall and hereby does guarantee that all such equipment, apparatus, and work will satisfactorily perform the intended function as integral and coordinated units, and will remain free of defective materials and workmanship for a period of five (5) years from date of final acceptance by the OWNER, except where longer periods are herein specified in which case they shall govern.

The CONTRACTOR shall guarantee the protective coatings against any defective material or workmanship for a period of five (5) years from the date of acceptance. If any materials or workmanship prove to be defective within the five (5) years, they shall be replaced or repaired by the CONTRACTOR at his own expense.

The CONTRACTOR further agrees that he will, at his own expense and without extra cost to the OWNER, remove, repair, or replace all defective materials, equipment, apparatus and work, and all other work damaged thereby which becomes defective during the term of the Guaranty-Warranty.

72.07. INSPECTION

Upon completion of the tank installation, the manufacturer's representative shall conduct an inspection of the work and submit a written report to the OWNER indicating that the tank has been erected per the manufacturer's erection instructions, that the required testing has been performed, and that any leaks have been repaired to the satisfaction of the manufacturer.

72.08. HYDROSTATIC TESTING

Following completion of erection and cleaning of the tank, the structure shall be tested for liquid tightness by filling tank to its overflow elevation.

Any leaks disclosed by this test shall be corrected by the erector in accordance with the manufacturer's recommendations.

Water required for testing shall be furnished by the OWNER at the time of tank erection completion, as per section 72.10 of these specifications. Disposal of test water shall be the responsibility of the CONTRACTOR.

Labor and equipment necessary for tank testing is to be included in the price of the tank.

72.09. DISINFECTION OF TANK

The CONTRACTOR shall fill with water and disinfect the tank in accordance with the AWWA Standard C652 (Disinfection of Water Storage Facilities), chlorination method 2 must be used. The chlorine solution shall be applied to all interior water surfaces above the overflow elevation as well. The CONTRACTOR shall begin filling the tank with water immediately after the supplemental chlorine has been added or concurrently with supplemental chlorine. The control building may be used for access to the fill line. The CONTRACTOR will fill and disinfect the tank after the OWNER has installed the water main and the above ground control building. The CONTRACTOR shall coordinate the entire disinfection process with the OWNER and the disinfection process cannot begin without approval from the OWNER. It is important to note, however, that the CONTRACTOR may be required to make a new tap in the water main to inject the chemical. After disinfection, the CONTRACTOR shall obtain bacteriologic clearance from the Illinois Environmental Protection Agency (IEPA). A minimum of two (2) samples collected at a minimum of 24 hours apart shall be analyzed and approved by IEPA before placing the tank into service.

If results of tests indicate inadequate disinfection, then the tank shall be drained and disinfected again, until IEPA approval is obtained. If results of tests indicate inadequate disinfection, then the tank shall be drained and disinfected again, until IEPA approval is obtained.

Once the new tank has been filled, the treated water shall remain in the tank for approximately 24 hours prior to flushing. After this time, all treated water shall be thoroughly flushed from the new tank until the replacement water throughout is prepared for the chlorination process.

Any wasted water shall be treated to neutralize the chlorine residual and the water shall be discharged (utilizing fire hoses to the nearest drainage ditch) in such manner that no damage to downstream points occur.

The CONTRACTOR shall observe all necessary precautions when handling chemicals.

All chlorine application work shall be performed in the presence of the Resident Project Representative. All chlorine application work shall be incidental to the Contract price.

The CONTRACTOR shall provide all bacteriological analysis results to the OWNER.

Filling operations shall be coordinated with the OWNER. The OWNER shall provide the permissible filling rates and times.

72.10. WATER USED BY CONTRACTOR

Water used by the CONTRACTOR to initially fill, disinfect (first attempt only), chlorinate, and place the tank in service shall be furnished to the CONTRACTOR by the OWNER at no cost. Water used to re-disinfect the tank or the water used during the 2-year and 5-year inspection will not be billed to the CONTRACTOR. Losses of water due to leaks in the tank, accidental or otherwise, during construction and/or the 5-year warranty period shall be estimated and paid by the CONTRACTOR at the rate of $5.50 per thousand gallons used.

72.11. COATING FOR CONCRETE FLOOR ALT. A BASE BID "A"

Surface Preparation:

Substrate must be sound, clean and free from voids, gaping cracks or ridges. Pre-water substrate with clean water to saturated surface dry condition, with no standing surface water.

Application:

Apply Aquafin-2K/M (as sold by Coating Solutions, LLC 636-938-9292) at 60 mils in one coat using a stainless-steel trowel or appropriate compressed air equipment. Apply additional coat over visible defects (i.e. cracks, etc.). Alternatively apply in two brush or roller coats to 60 mils thickness, smoothing to trowel finish.

72.12. CATHODIC PROTECTION

Intentionally Blank

72.13. STORAGE TANK MIXING SYSTEM

Intentionally Blank

IEPA Permit

Intentionally Blank

ILLINOIS ENVIRONMENTAL PROTECTION AGENCY
1021 North Grand Avenue, East; Post Office Box 19276; Springfield, IL 62794-9276
Division of Public Water Supplies Telephone 217/782-1724

PUBLIC WATER SUPPLY CONSTRUCTION PERMIT

HENEGHAN & ASSOC.
RECEIVED
DEC 2 2 2020
JERSEYVILLE, IL

SUBJECT: JERSEY RWC (IL0835300)

Permit Issued to:
Jersey Rural Water Co.
1009 State Hwy 16
Jerseyville, IL 62052

PERMIT NUMBER: 0211-FY2021

DATE ISSUED: December 16, 2020
PERMIT TYPE: Water Main and Plant Improvement

The issuance of this permit is based on plans and specifications prepared by the engineers/architects indicated and are identified as follows. This permit is issued for the construction and/or installation of the public water supply improvements described in this document, in accordance with the provisions of the Environmental Protection Act, Title IV, Sections 14 through 17, and Title X, Sections 39 and 40, and is subject to the conditions printed on the last page of this permit and the ADDITIONAL CONDITIONS listed below.

FIRM: Heneghan and Associates, P.C.
NUMBER OF PLAN SHEETS: 7
TITLE OF PLANS: "Phase V System Improvements Ground Storage Tank Contract "K""
APPLICATION RECEIVED DATE: September 1, 2020

PROPOSED IMPROVEMENTS:

The installation of an approximately 200,000 gallon glass fused steel ground storage tank with all necessary appurtenances and associated control building and approximately 70 feet of 8-inch water main located west of Godfrey near the Route 3 Booster Station.

ADDITIONAL CONDITIONS:

1. All water mains shall be satisfactorily disinfected prior to use, pursuant to 35 Ill. Adm. Code 602.310. Two consecutive sets of samples collected at least 24 hours apart must show the absence of coliform bacteria. The samples must be collected from every 1,200 feet of new water main along each branch and from the end of the line. An operating permit must be obtained before the project is placed in service.

2. The permit approval is for the Application, Schedule B, SHPO approval and 8 plan sheets received on 9/1/2020. Including all emails most recently dated to 11/25/2020.

DCC:CLB

cc: Heneghan and Associates, P.C.
Collinsville Regional Office

David C. Cook, P.E.
Manager, Permit Section
Division of Public Water Supplies

STANDARD CONDITIONS FOR CONSTRUCTION/DEVELOPMENT PERMITS
ISSUED BY THE ILLINOIS ENVIRONMENTAL PROTECTION AGENCY

The Illinois Environmental Protection Agency Act (415 ILCS 5/39) grants the Environmental Protection Agency authority to impose conditions on permits which it issues.

These standard conditions shall apply to all permits which the Agency issues for construction or development projects which require permits under the Division of Water Pollution Control, Air Pollution Control, Public Water Supplies and Land Pollution Control. Special conditions may also be imposed by the separate divisions in addition to these standard conditions.

1. Unless this permit has been extended or it has been voided by a newly issued permit, this permit will expire one year after this date of issuance unless construction or development on this project has started on or prior to that date. (See standard condition #8 below)

2. The construction or development of facilities covered by this permit shall be done in compliance with applicable provisions of Federal laws and regulations, the Illinois Environmental Protection Act, and Rules and Regulations adopted the Illinois Pollution Control Board.

3. There shall be no deviations from the approved plans and specifications unless a written request for modification of the project, along with plans and specifications as required, shall have been submitted to the Agency and a supplemental written permit issued.

4. The permittee shall allow any agent duly authorized by the Agency upon the presentation of credentials:

   a. to enter at reasonable times the permittee's premises where actual or potential effluent, emission or noise sources are located or where any activity is to be conducted pursuant to this permit.

   b. to have access to and copy at reasonable times any records required be kept under the terms and conditions of this permit.

   c. to inspect at reasonable times, including during any hours or operation of equipment constructed or operated under this permit, such equipment or monitoring methodology or equipment required to be kept, used, operated, calibrated and maintained under this permit.

   d. to obtain and remove at reasonable times samples of any discharge or emission of pollutants.

   e. to enter at reasonable times and utilize any photographic, recording, testing, monitoring or other equipment for the purpose of preserving, testing, monitoring, or recording any activity, discharge, or emission authorized by this permit.

5. The issuance of this permit:

   a. shall not be considered as in any manner affecting the title of the permits upon which the permitted facilities are to be located;

   b. does not release the permittee from any liability for damage to person or property caused by or resulting from the construction, maintenance, or operation of the proposed facilities;

   c. does not release the permittee from compliance with the other applicable statues and regulations of the United States, of the State of Illinois, or with applicable local laws, ordinances and regulations;

   d. does not take into consideration or attest to the structural stability of any units or parts of the project;

   e. in no manner implies or suggests that the Agency (or its officers, agents or employees) assumes any liability directly or indirectly for any loss due to damage, installation, maintenance, or operation of the proposed equipment or facility.

6. These standard conditions shall prevail unless modified by special conditions.

7. The Agency may file a complaint with Board of modification, suspension or revocation of a permit:

   a. upon discovery that the permit application misrepresentation or false statements or that all relevant facts were not disclosed; or

   b. upon finding that any standard or special conditions have been violated; or

   c. upon any violation of the Environmental Protection Act or any Rules or Regulation effective thereunder as a result of the construction or development authorized by this permit.

8. Division of Public Water Supply Construction Permits expire one year from date of issuance or renewal, unless construction has started. If construction commences within one year from date of issuance or renewal, the permit expires five years from the date of permit issuance or renewal. A request for extension shall be filed prior to the permit expiration date.

ILLINOIS
DEPARTMENT OF NATURAL RESOURCES

Illinois Department of Natural Resources

SURVEY REQUEST

JB Pritzker, Governor
Colleen Callahan, Director

www.dnr.illinois.gov

Mailing address: State Historic Preservation Office, 1 Old State Capitol Plaza, Springfield, IL 62701

Jersey County
Various townships
Addition of Elevated & under ground water storage tanks – Address unknown
H&A-00139-4100, IEPA-PWS-2021-0208 & 0211, USDA - RD
Water system improvements/water main replacements

PLEASE REFER TO: SHPO LOG #005070318

September 28, 2020

Seth W. Elliott
Heneghan and Associates, P.C.
1004 State Highway 16
Jerseyville, IL 62052

Dear Mr. Elliott:

Thank you for requesting comments from our office concerning the possible effects of the project referenced above on cultural resources. Our comments are required by Section 106 of the National Historic Preservation Act of 1966 (16 USC 470), as amended, and its implementing regulations, 36 CFR 800: "Protection of Historic Properties".

The project area has not been surveyed and may contain prehistoric/historic archaeological resources. Accordingly, a Phase I archaeological reconnaissance survey to locate, identify, and record all archaeological resources within the project area will be required. This decision is based upon our understanding that there has not been any large scale disturbance of the ground surface (excluding agricultural activities) such as major construction activity within the project area which would have destroyed existing cultural resources prior to your project. If the area has been heavily disturbed prior to your project, please contact our office with the appropriate written and/or photographic evidence.

The area(s) that need(s) to be surveyed include(s) all area(s) that will be developed as a result of the issuance of the federal agency permit(s) or the granting of the federal grants, funds, or loan guarantees that have prompted this review. In addition to the archaeological survey please provide clear photographs of all structures in, or adjacent to, the current project area as part of the archaeological survey report.

Enclosed you will find an attachment briefly describing Phase I surveys and a list of archaeological contracting services. THE SHPO LOG NUMBER OR A COPY OF THIS LETTER SHOULD BE PROVIDED TO THE SELECTED PROFESSIONAL ARCHAEOLOGICAL CONTRACTOR TO ENSURE THAT THE SURVEY RESULTS ARE CONNECTED TO YOUR PROJECT PAPERWORK.

If you have further questions, please contact Jeff Kruchten, Chief Archaeologist at 217/785-1279 or Jeffery.kruchten@illinois.gov.

Sincerely,

Robert F. Appleman
Deputy State Historic
Preservation Officer

RECEIVED
OCT 02 2020
Div. of Public Water Supplies
Illinois EPA

Enclosure

c: Dave Cook, IEPA, Division of Public Water Supplies-Permits

Intentionally Blank