PROJECT:

LIFT STATION #14 FORCEMAIN REPLACEMENT

OWNER:

CITY OF MOUNT VERNON
1100 MAIN STREET, P.O. BOX 1708
MOUNT VERNON, ILLINOIS 62864

ENGINEER:

HMG ENGINEERS, INC.
9360 HOLY CROSS LANE
BREESE, ILLINOIS 62230
PH: (618) 526-9611
FAX (866) 666-7213

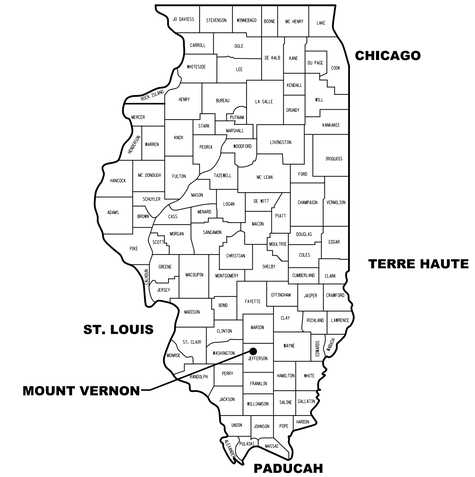

STATE LOCATION PLAN

N

PROJECT LOCATION

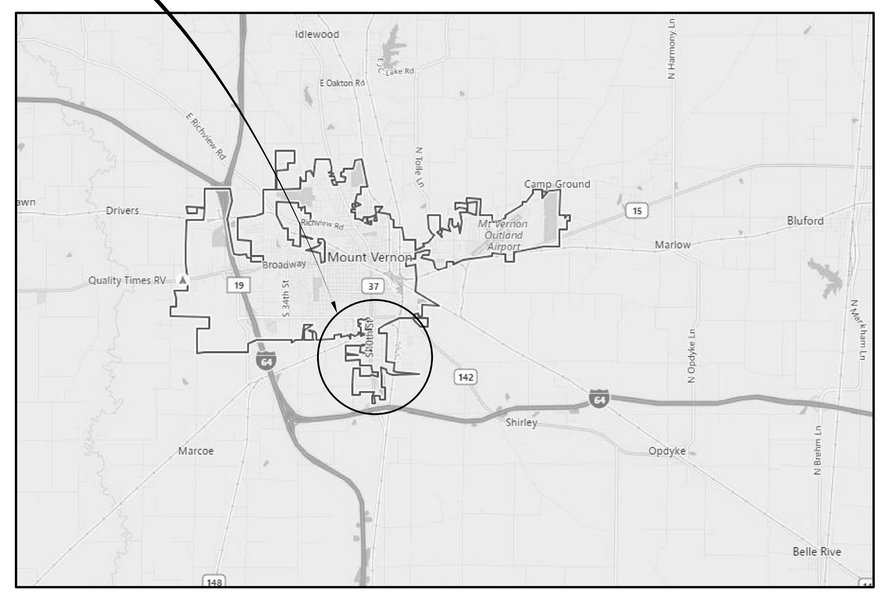

CITY LOCATION PLAN

N

ENGINEER OF RECORD FOR CONTRACT RESPONSIBILITY, AND TECHNICAL RESPONSIBILITY FOR WORK PRESENTED ON ALL SHEETS

DATE: 9/22/20

JOHN A. WIETER P.E.
LICENSED PROFESSIONAL ENGINEER IN ILLINOIS
LICENSE #062-063871
EXPIRES: NOVEMBER 30, 2021

LICENSED PROFESSIONAL ENGINEER
JOHN A. WIETER
062-063871
STATE OF ILLINOIS

REVISIONS

PLOT DATE 09-22-20
DRAWING FILE 01_COVER_6694

COVER SHEET

LIFT STATION #14
FORCEMAIN REPLACEMENT
MOUNT VERNON, ILLINOIS

HMG ENGINEERS, INC.
9360 HOLY CROSS LANE
BREESE, ILLINOIS 62230
(618) 526-9611
WWW.HMGENGINEERS.COM

HMG Engineers • Surveyors

SURVEY	DJS/BMO
DESIGN	JDV
DRAWN	NJK
CHECKED	JAW
DATE	09-20

SHEET 1

JOB NO. 6694.2

INDEX OF SHEETS

1 COVER SHEET
2 INDEX OF SHEETS & GENERAL NOTES
3 PROJECT OVERVIEW
4 PROPOSED FORCEMAIN-PLAN & PROFILE
5 PROPOSED FORCEMAIN-PLAN & PROFILE
6 PROPOSED FORCEMAIN-PLAN & PROFILE
7 PROPOSED FORCEMAIN-PLAN & PROFILE
8 PROPOSED FORCEMAIN-PLAN & PROFILE
9 PROPOSED FORCEMAIN-PLAN & PROFILE
10 PROPOSED FORCEMAIN-PLAN & PROFILE
11 PROPOSED FORCEMAIN-PLAN & PROFILE
12 PROPOSED FORCEMAIN-PLAN & PROFILE
13 PROPOSED FORCEMAIN-PLAN & PROFILE
14 PROPOSED FORCEMAIN-PLAN & PROFILE
15 PROPOSED FORCEMAIN-PLAN & PROFILE
16 PROPOSED FORCEMAIN-PLAN & PROFILE
17 EXISTING STRUCTURE IMPROVEMENTS
18 TYPICAL SEWER DETAILS SHEET 1 OF 2
19 TYPICAL SEWER DETAILS SHEET 2 OF 2

GENERAL NOTES

1. THE CONTRACTOR SHALL VERIFY ALL CONDITIONS EXISTING AT THE SITE PRIOR TO THE START OF CONSTRUCTION.
2. PRIOR TO THE START OF CONSTRUCTION THE CONTRACTOR SHALL LAYOUT THE PROPOSED IMPROVEMENTS AND SHALL VERIFY ALL DIMENSIONS, ANGLES AND COORDINATES SHOWN. SHOULD THE CONTRACTOR NOTE ANY DISCREPANCIES OR CONFLICTS, HE SHALL NOTIFY THE ENGINEER PRIOR TO PROCEEDING WITH THE WORK.
3. THE CONTRACTOR SHALL MAINTAIN POSITIVE DRAINAGE AT ALL TIMES. COSTS OF TEMPORARY CULVERTS, DITCHES, PUMPS, OR OTHER ITEMS REQUIRED TO MAINTAIN POSITIVE DRAINAGE SHALL BE INCIDENTAL TO THE CONTRACT.
4. INFORMATION ON THE PLANS REGARDING UNDERGROUND UTILITIES IS TAKEN FROM THE BEST AVAILABLE RECORDS, BUT IS NOT REPRESENTED AS BEING ENTIRELY CORRECT OR COMPLETE. THE CONTRACTOR SHALL NOTIFY THE ENGINEER IN ADVANCE OF CROSSING OVER OR UNDER ANY UTILITIES SHOWN ON THE PLANS. THE CONTRACTOR SHALL NOTIFY IMMEDIATELY UPON DISCOVERY OF ANY UTILITY NOT SHOWN ON THE PLANS. CONTRACTOR SHALL NOTIFY THE CITY'S DEPARTMENT OF PUBLIC WORKS INITIALLY, THEN THE UTILITY COMPANY IF NOT THE CITY'S UTILITY.
5. PRIOR TO THE START OF CONSTRUCTION, THE CONTRACTOR SHALL ARRANGE TO HAVE ALL UNDERGROUND UTILITIES INCLUDING WATER, GAS, ELECTRIC, STORM SEWER, SANITARY SEWER, TELEPHONE, CABLE TV AND FIBER OPTICS LOCATED AND SUITABLY MARKED. SHOULD A UTILITY BE IN CONFLICT WITH THE PROPOSED CONSTRUCTION, THE ENGINEER SHALL BE NOTIFIED AT ONCE. IF UTILITIES INTERFERE WITH THE CONSTRUCTION ALIGNMENT, THEY SHALL BE PROTECTED.
6. ALL EXCAVATIONS SHALL BE KEPT DEWATERED DURING CONSTRUCTION OPERATIONS UNTIL BACKFILL IS IN PLACE.
7. THE PLACEMENT OF BACKFILL AROUND STRUCTURES SHALL BE DONE SIMULTANEOUSLY ON ALL SIDES IN EVEN LAYERS.
8. ALL BASE SLABS SHALL BE PLACED ON A MINIMUM OF 6 INCHES OF UNIFORMLY COMPACTED GRANULAR FILL (SEE SPECIFICATIONS)
9. WHERE CONFLICTS EXIST BETWEEN THE PLANS AND SPECIFICATIONS, THE SPECIFICATIONS SHALL SUPERCEDE.
10. SEWER MAIN SHALL BE CONSTRUCTED IN ACCORDANCE WITH "STANDARD SPECIFICATIONS FOR WATER & SEWER MAIN CONSTRUCTION IN ILLINOIS, CURRENT EDITIONS.
11. UTILITIES ARE SHOWN IN ACCORDANCE WITH THE BEST AVAILABLE INFORMATION AND THEIR TRUE LOCATION IS NOT GUARANTEED TO BE SHOWN ON PLANS. CALL J.U.L.I.E. CONTRACTOR IS RESPONSIBLE FOR MAINTAINING EXISTING UTILITY SERVICES AS INCIDENTAL TO THE CONTRACT. THE CONTRACTOR SHALL ADJUST DEPTH AS NECESSARY TO AVOID EXISTING UTILITIES AND PROVIDE EXTENSIONS FOR VALVE BOXES, HYDRANTS, ETC. AS NECESSARY. NO ADDITIONAL COMPENSATION WILL BE ALLOWED FOR THIS WORK.

SYMBOL LEGEND

- PROPOSED WATER VALVE
- GENERIC DESIGNATION FOR A VALVE
- PROPOSED FIRE HYDRANT
- EXISTING FIRE HYDRANT
- LIGHT POLE
- GUY WIRE
- POWER POLE
- IRON ROD FOUND
- T.S. TRAVERSE STATION
- TREE
- SPOT ELEVATION
- SIGN
- EXISTING MANHOLE
- PROPOSED MANHOLE
- SPLICE BOX
- TELEPHONE POLE
- MAIL BOX
- SOIL BORING
- EXISTING WATER METER
- RAILROAD SIGNAL FOUNDATION
- EXISTING WATER MAIN
- PROPOSED WATER MAIN
- EXISTING SANITARY SEWER
- PROPOSED SANITARY SEWER
- CONTOUR EXISTING
- CONTOUR PROPOSED
- TREELINE
- PROPOSED EASEMENT LINE
- EXISTING EASEMENT LINE
- PROPOSED CONSTRUCTION EASEMENT
- PROPOSED FENCE LINE
- EXISTING FENCE LINE
- PROPERTY LINE
- EDGE OF ROAD
- CENTER OF ROAD
- DRAINAGE WAY
- EXISTING R.O.W. LINE
- PROPOSED R.O.W. LINE
- EXISTING CULVERT
- EXISTING STORM SEWER
- EXISTING TELEPHONE
- EXISTING ELECTRIC LINE
- EXISTING GAS
- EXISTING FIBER OPTIC LINE
- EXISTING CABLE TV LINE
- EXISTING GUARDRAIL
- EXISTING RAILROAD
- SHOULDER
- EXISTING SEWERS TO BE LINED

ABBREVIATIONS LEGEND

ALUM.	ALUMINUM
ASTM	AMERICAN SOCIETY FOR TESTING AND MATERIALS
℄	CENTERLINE
CMP	CORRUGATED METAL PIPE
CONC.	CONCRETE
C.Y.	CUBIC YARD
DIA	DIAMETER
D.I.	DUCTILE IRON
D.I.P.	DUCTILE IRON PIPE
EL. OR ELEV.	ELEVATION
FIN.	FINISHED
FT.	FOOT OR FEET
GR	GRADE
H.W.L.	HIGH WATER LEVEL
TS	TRAVERSE STATION
S.Y.	SQUARE YARD
INV.	INVERT ELEVATION
IN.	INCH OR INCHES
L.F.	LINEAL FEET
LT.	LEFT
L.W.L.	LOW WATER LEVEL
M.H.	MANHOLE
MAX.	MAXIMUM
MIN.	MINIMUM
NO. OR #	NUMBER
N.T.S.	NOT TO SCALE
O.C.	ON CENTER
O.D.	OUTSIDE DIAMETER
R	RADIUS
RT.	RIGHT
R.C.P.	REINFORCED CONCRETE PIPE
STD.	STANDARD
TYP.	TYPICAL
SS.	STAINLESS STEEL
SCH.	SCHEDULE
PVC	POLYVINYL CHLORIDE
M.J.	MECHANICAL JOINT
I.D.	INSIDE DIAMETER

REVISIONS

PLOT DATE 06-21-17
DWG FILE
002_INDEX_6694

INDEX OF SHEETS & GENERAL NOTES

LIFT STATION #14
FORCEMAIN REPLACEMENT
MOUNT VERNON, ILLINOIS

HMG ENGINEERS, INC.
9360 HOLY CROSS LANE
BREESE, ILLINOIS 62230
WWW.HMGENGINEERS.COM
(618) 526-9611

HMG Engineers • Surveyors

SURVEY	DJS/BMO
DESIGN	JDV
DRAWN	NJK
CHECKED	JAW
DATE	06-19

SHEET 2

JOB NO. 6694.2

REVISIONS

PLOT DATE 06-21-19
DWG FILE P3_INDEX OF DRAWINGS_OPR

PROJECT OVERVIEW

LIFT STATION #14
FORCEMAIN REPLACEMENT
MOUNT VERNON, ILLINOIS

HMG ENGINEERS, INC.
9360 HOLY CROSS LANE
BREESE, ILLINOIS 62230
(618) 526-9611
WWW.HMGENGINEERS.COM

HMG Engineers • Surveyors

SURVEY	DJS/BMO
DESIGN	JDV
DRAWN	NJK
CHECKED	JAW
DATE	06-19

SHEET
3

JOB NO. 6694.2

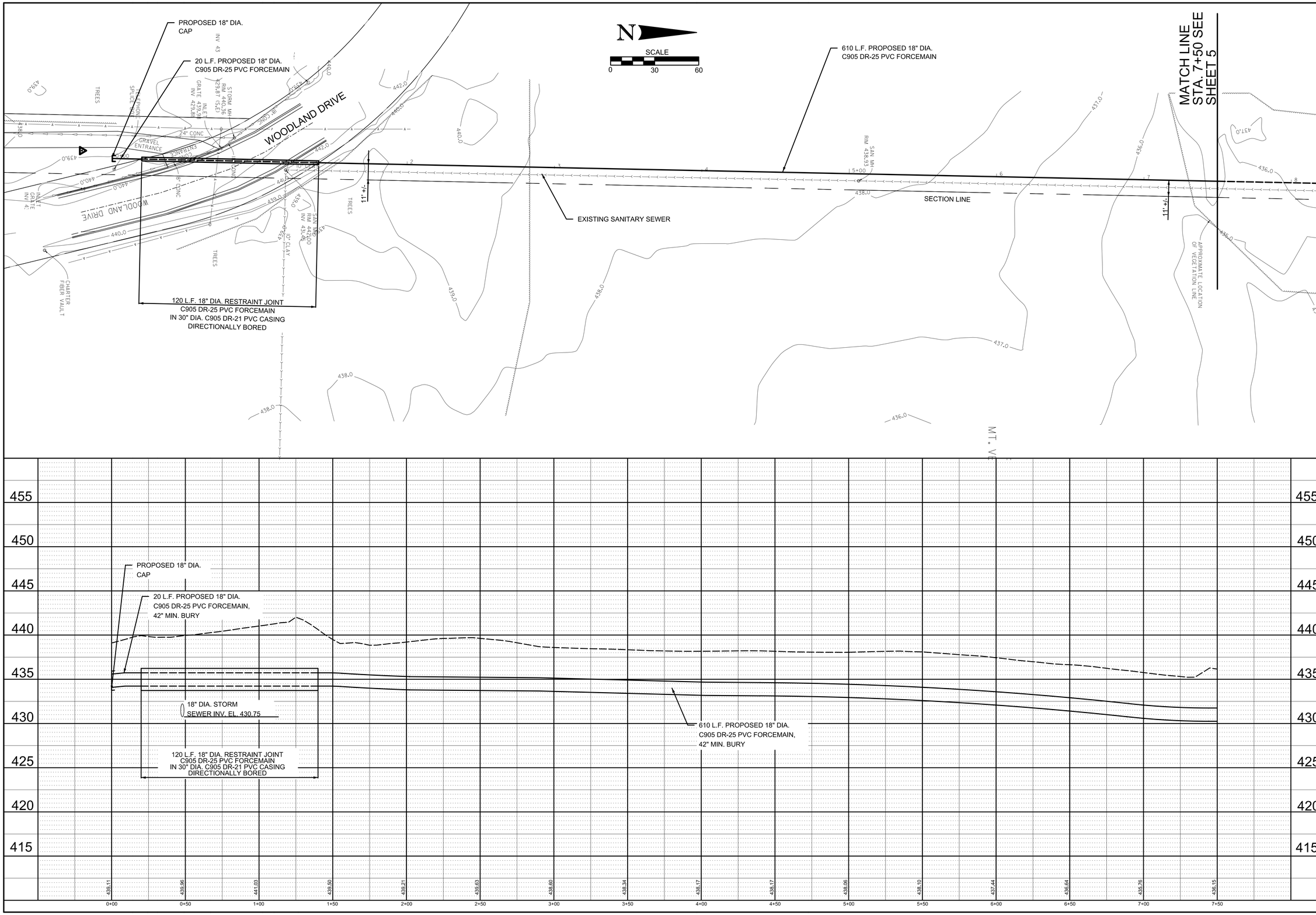

REVISIONS

PLOT DATE 06-27-19
DWG TILE 06-PROP FM, PLAN&PROF.DWG

PROPOSED FORCEMAIN PLAN & PROFILE

LIFT STATION #14 FORCEMAIN REPLACEMENT MOUNT VERNON, ILLINOIS

HMG ENGINEERS, INC.
9360 HOLY CROSS LANE
BREESE, ILLINOIS 62230
WWW.HMGENGINEERS.COM
(618) 526-9611

HMG Engineers • Surveyors

SURVEY	DJS/BMO
DESIGN	JDV
DRAWN	NJK
CHECKED	JAW
DATE	06-19

SHEET 4

JOB NO. 6694.2

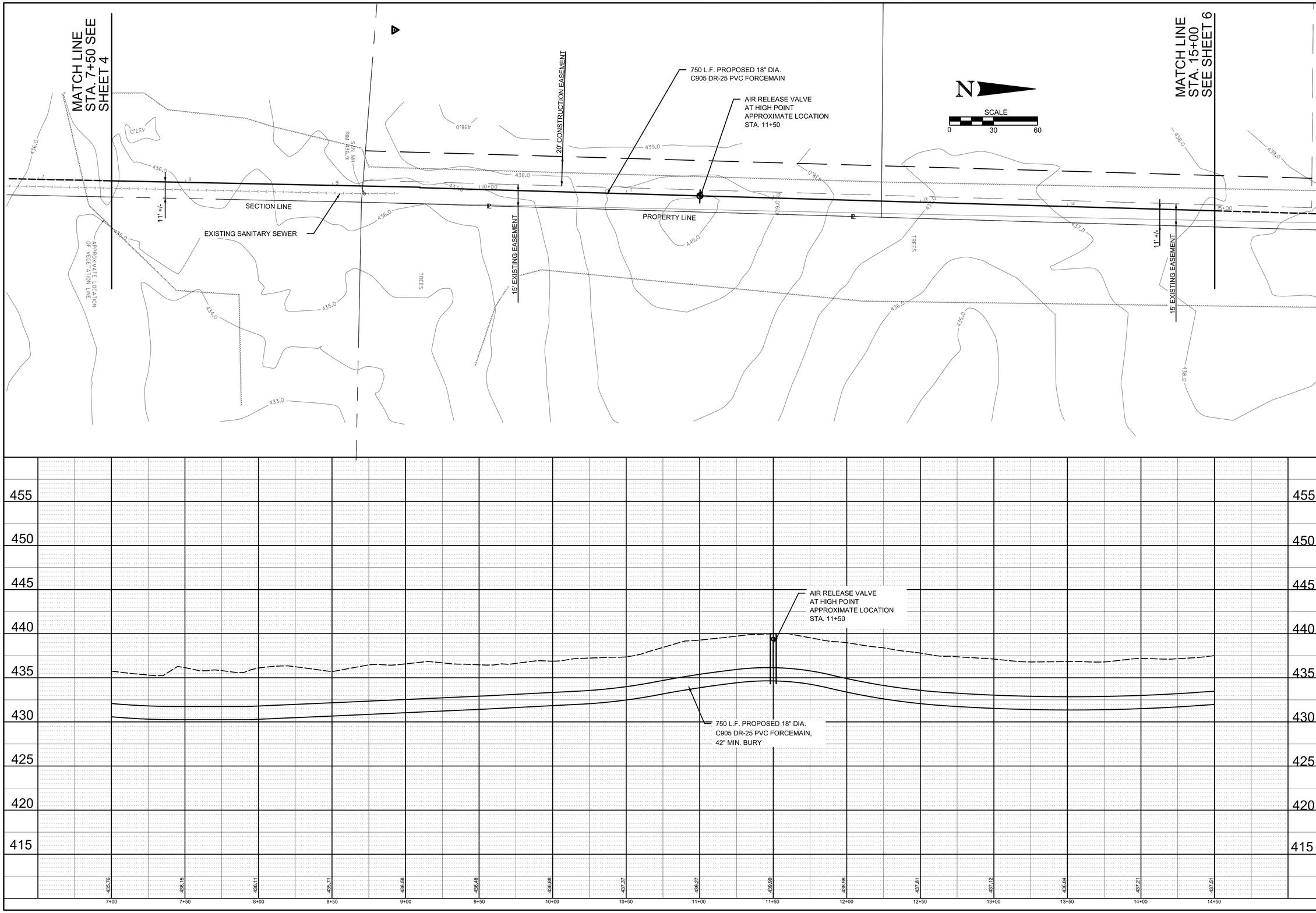

REVISIONS

PLOT DATE
06-27-19
DWG FILE
05_PROF PVL
PLATPROF.DWG

PROPOSED FORCEMAIN PLAN & PROFILE

LIFT STATION #14 FORCEMAIN REPLACEMENT MOUNT VERNON, ILLINOIS

HMG ENGINEERS, INC.
9360 HOLY CROSS LANE
BREESE, ILLINOIS 62230
WWW.HMGENGINEERS.COM
(618) 526-9611

HMG Engineers • Surveyors

SURVEY	DJS/BMO
DESIGN	JDV
DRAWN	NJK
CHECKED	JAW
DATE	06-19

SHEET
5

JOB NO. 6694.2

REVISIONS

PLOT DATE
06-27-19
DWG FILE
06_PROP PVL
PLATPROF.DWG

PROPOSED FORCEMAIN PLAN & PROFILE

LIFT STATION #14 FORCEMAIN REPLACEMENT MOUNT VERNON, ILLINOIS

HMG ENGINEERS, INC.
9360 HOLY CROSS LANE
BREESE, ILLINOIS 62230
WWW.HMGENGINEERS.COM
(618) 526-9611

HMG Engineers • Surveyors

SURVEY	DJS/BMO
DESIGN	JDV
DRAWN	NJK
CHECKED	JAW
DATE	06-19

SHEET
6

JOB NO. 6694.2

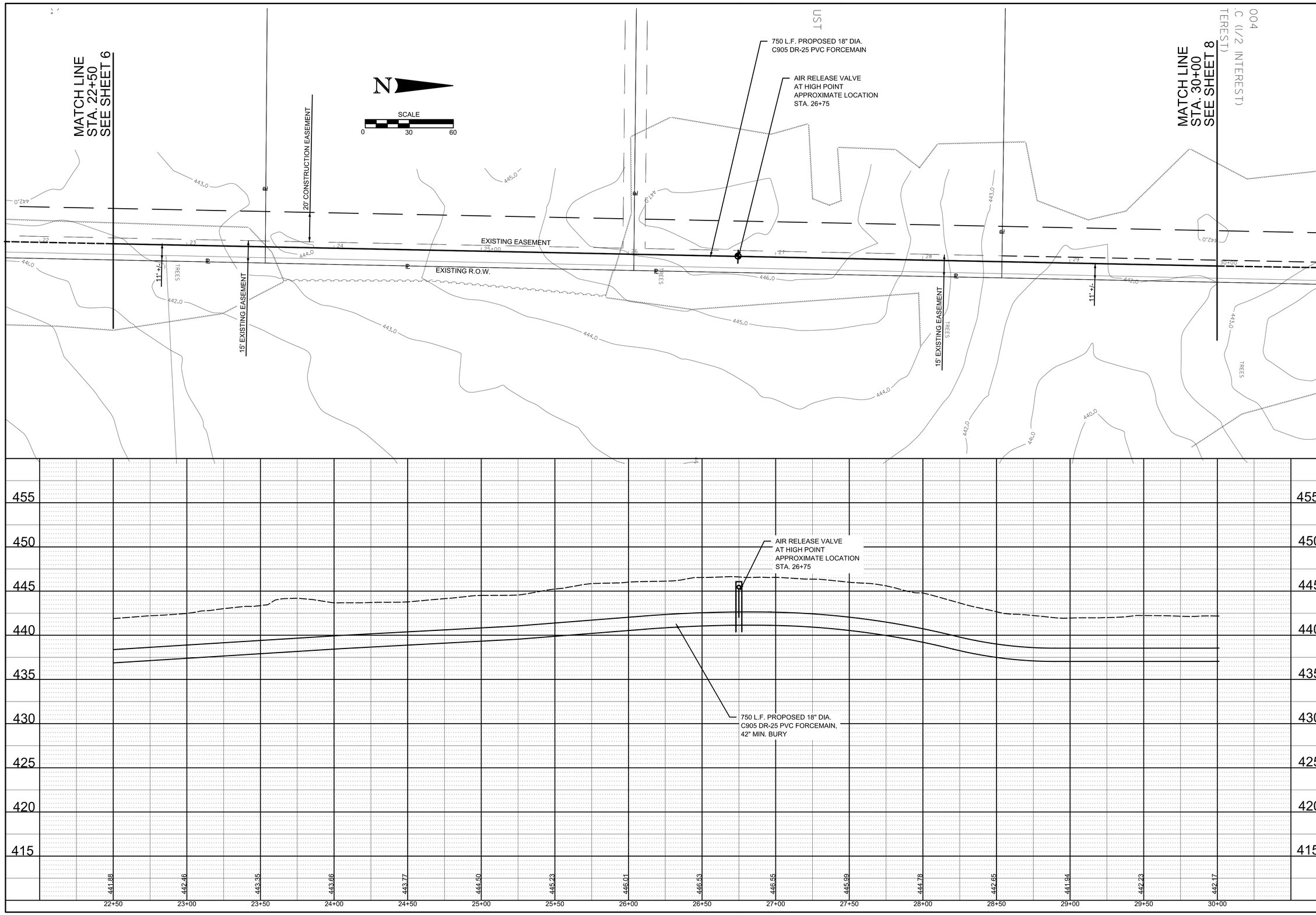

REVISIONS

PLOT DATE
06-27-19
DWG FILE
07_PROP FM_
P&P-PROF.DGN

PROPOSED FORCEMAIN PLAN & PROFILE

LIFT STATION #14 FORCEMAIN REPLACEMENT MOUNT VERNON, ILLINOIS

HMG ENGINEERS, INC.
9360 HOLY CROSS LANE
BREESE, ILLINOIS 62230
WWW.HMGENGINEERS.COM
(618) 526-9611

HMG Engineers • Surveyors

SURVEY	DJS/BMO
DESIGN	JDV
DRAWN	NJK
CHECKED	JAW
DATE	06-19

SHEET
7

JOB NO. 6694.2

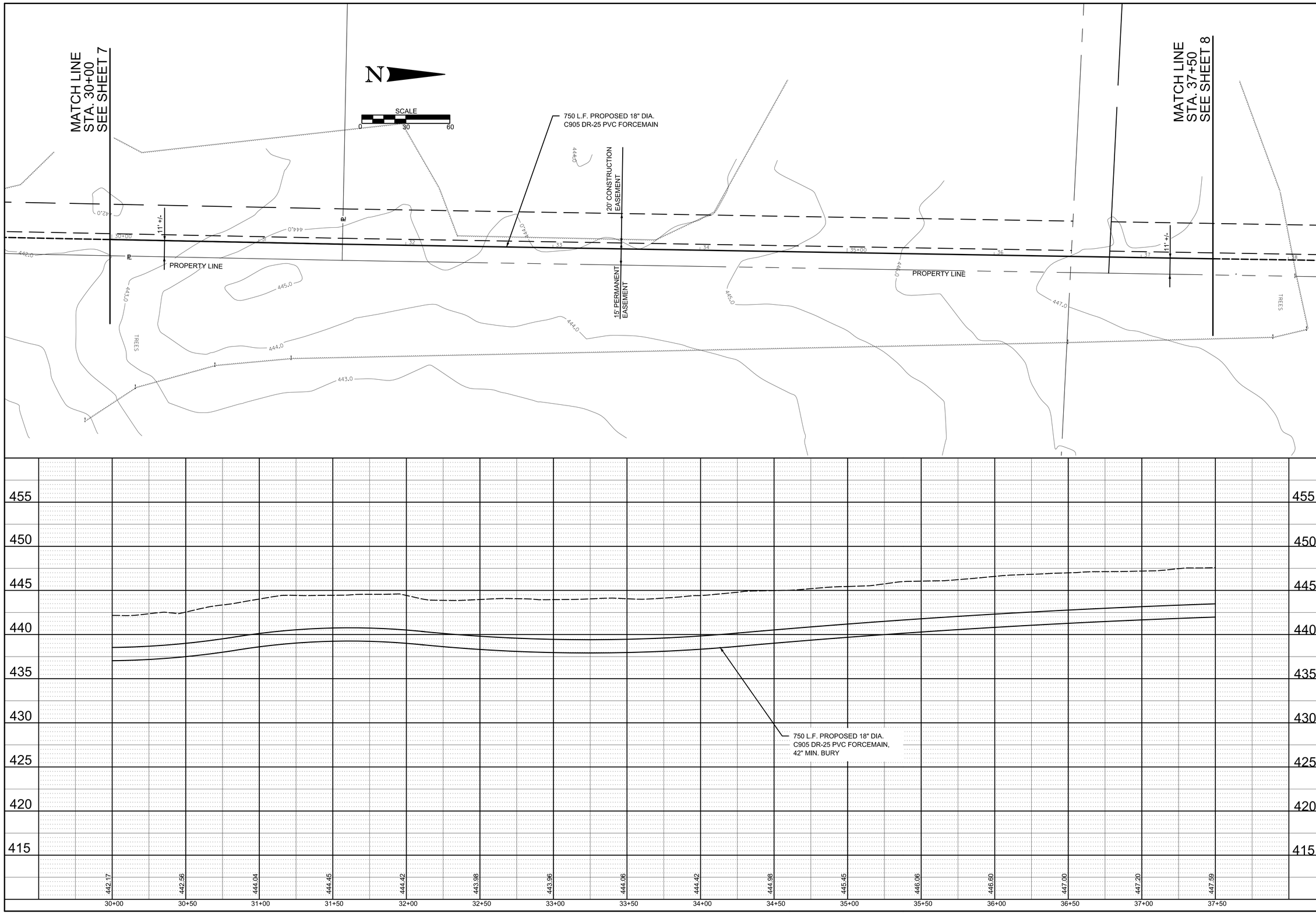

REVISIONS

PLOT DATE
06-27-19
DWG FILE: 6694 PROP PM
FILE/PROF: 6694

PROPOSED FORCEMAIN PLAN & PROFILE

LIFT STATION #14 FORCEMAIN REPLACEMENT MOUNT VERNON, ILLINOIS

HMG ENGINEERS, INC.
9360 HOLY CROSS LANE
BREESE, ILLINOIS 62230
WWW.HMGENGINEERS.COM
(618) 526-9611

HMG Engineers • Surveyors

SURVEY	DJS/BMO
DESIGN	JDV
DRAWN	NJK
CHECKED	JAW
DATE	06-19

SHEET
8

JOB NO. 6694.2

REVISIONS

PLOT DATE 06-21-19
DWG TILE FP_PROP PLN & PROFILE_MAIN

PROPOSED SANITARY SEWER PLAN & PROFILE

LIFT STATION #14 FORCEMAIN REPLACEMENT MOUNT VERNON, ILLINOIS

HMG ENGINEERS, INC.
9360 HOLY CROSS LANE
BREESE, ILLINOIS 62230
WWW.HMGENGINEERS.COM
(618) 526-9611

HMG Engineers • Surveyors

SURVEY	DJS/BMO
DESIGN	JDV
DRAWN	NJK
CHECKED	JAW
DATE	06-19

SHEET 9

JOB NO. 6694.2

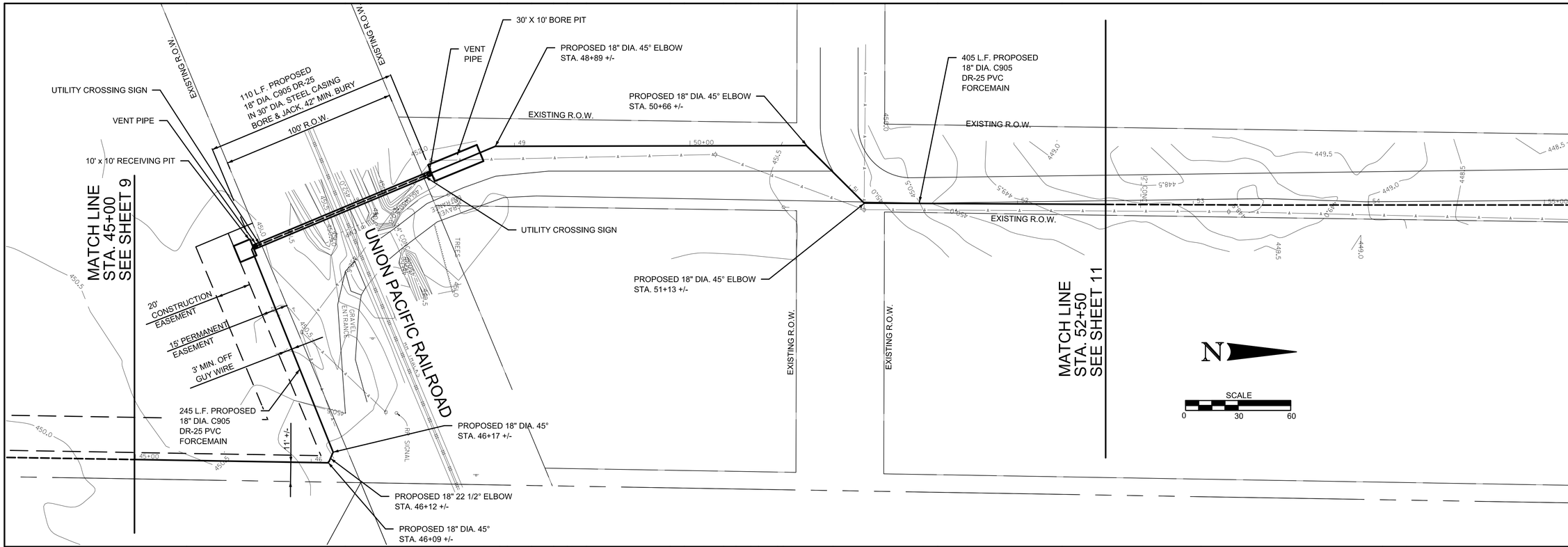

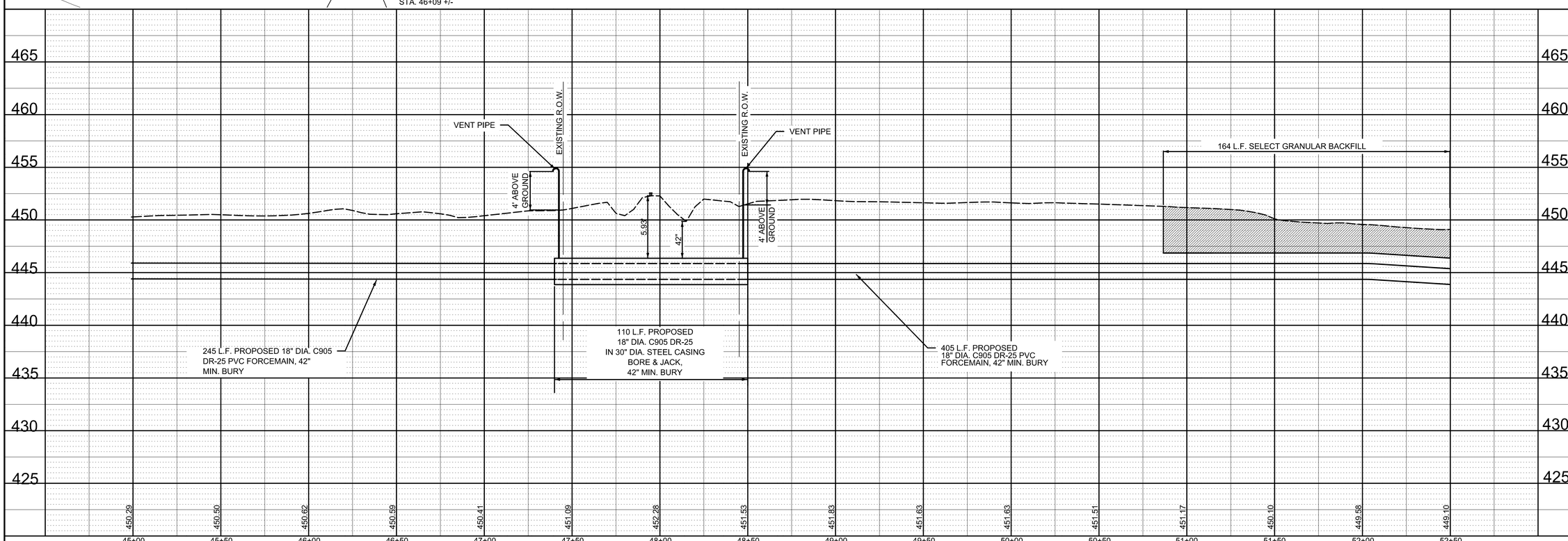

REVISIONS

PLOT DATE 03-25-20
DWG. FILE 10_PROP PM_PLAN&PROF_SHEET

PROPOSED FORCEMAIN PLAN & PROFILE

LIFT STATION #14 FORCEMAIN REPLACEMENT MOUNT VERNON, ILLINOIS

HMG ENGINEERS, INC.
9360 HOLY CROSS LANE
BREESE, ILLINOIS 62230
WWW.HMGENGINEERS.COM
(618) 526-9611

HMG Engineers • Surveyors

SURVEY	DJS/BMO
DESIGN	JDV
DRAWN	NJK
CHECKED	JAW
DATE	03-20

SHEET 10

JOB NO. 6694.2

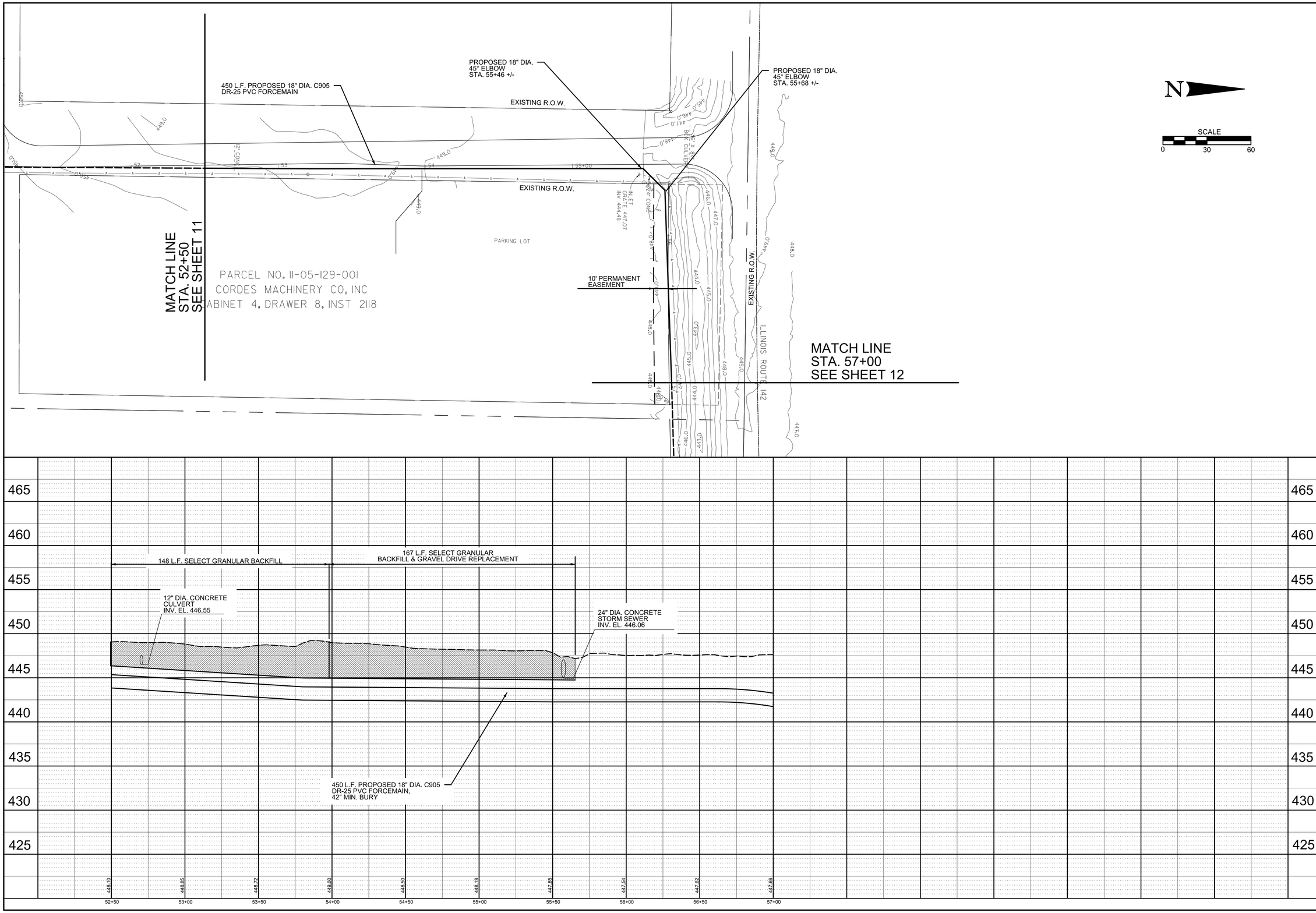

REVISIONS

PLOT DATE 06-21-17
CADD FILE 11_PROF.PAL
DRAWING 6694

PROPOSED FORCEMAIN PLAN & PROFILE

LIFT STATION #14 FORCEMAIN REPLACEMENT MOUNT VERNON, ILLINOIS

HMG ENGINEERS, INC.
9360 HOLY CROSS LANE
BREESE, ILLINOIS 62230
WWW.HMGENGINEERS.COM
(618) 526-9611

HMG Engineers • Surveyors

SURVEY	DJS/BMO
DESIGN	JDV
DRAWN	NJK
CHECKED	JAW
DATE	06-19

SHEET 11

JOB NO. 6694.2

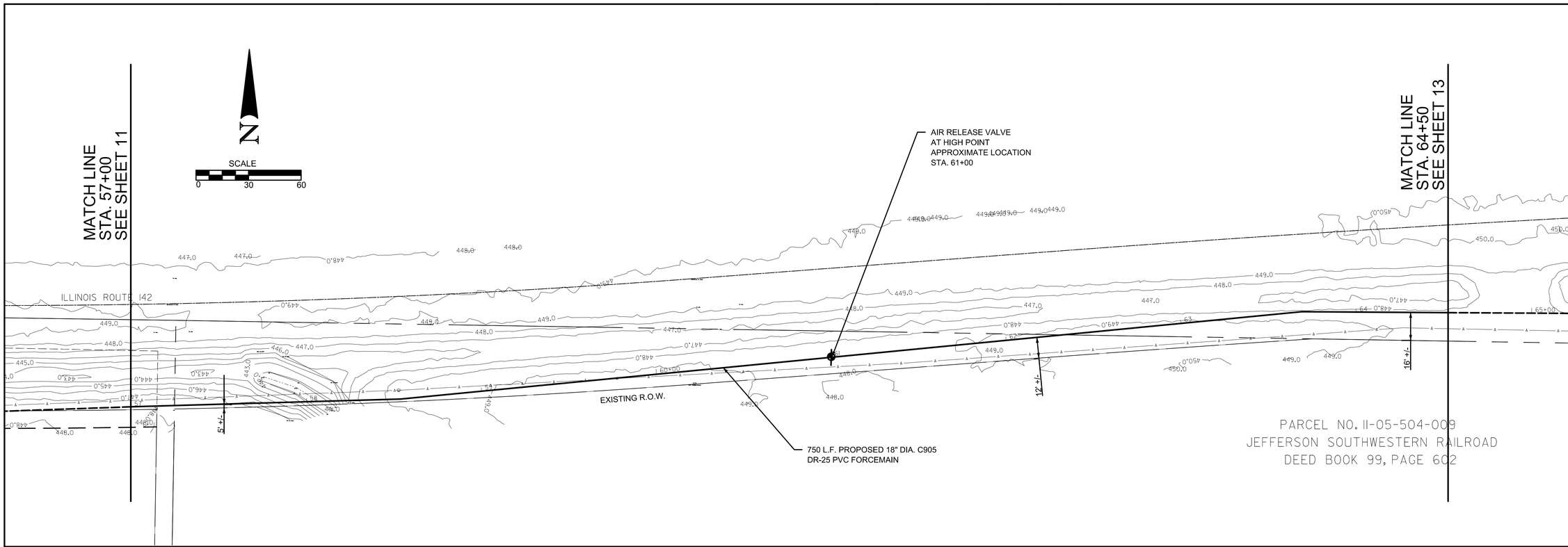

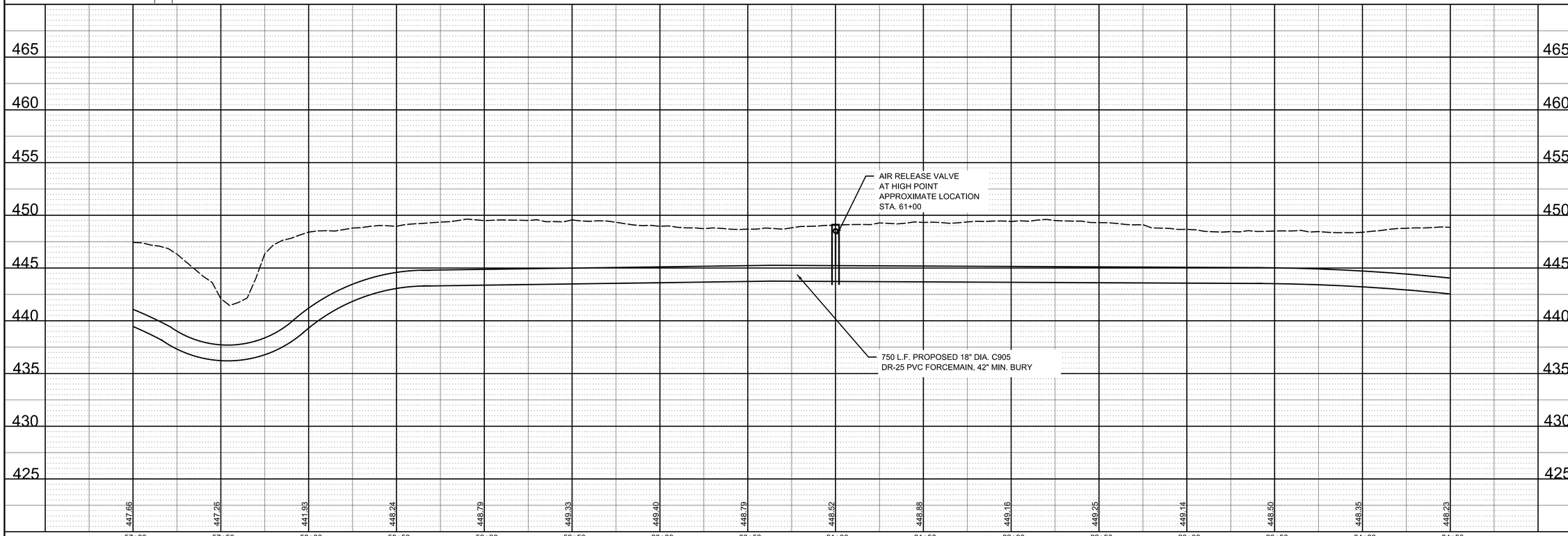

REVISIONS

PLOT DATE 06-21-19
DWG FILE 12_PROP FM.
PLOT SCALE 1"=50'-0"

PROPOSED FORCEMAIN PLAN & PROFILE

LIFT STATION #14 FORCEMAIN REPLACEMENT MOUNT VERNON, ILLINOIS

HMG ENGINEERS, INC.
9360 HOLY CROSS LANE
BREESE, ILLINOIS 62230
(618) 526-9611
WWW.HMGENGINEERS.COM

HMG Engineers • Surveyors

SURVEY	DJS/BMO
DESIGN	JDV
DRAWN	NJK
CHECKED	JAW
DATE	06-19

SHEET 12

JOB NO. 6694.2

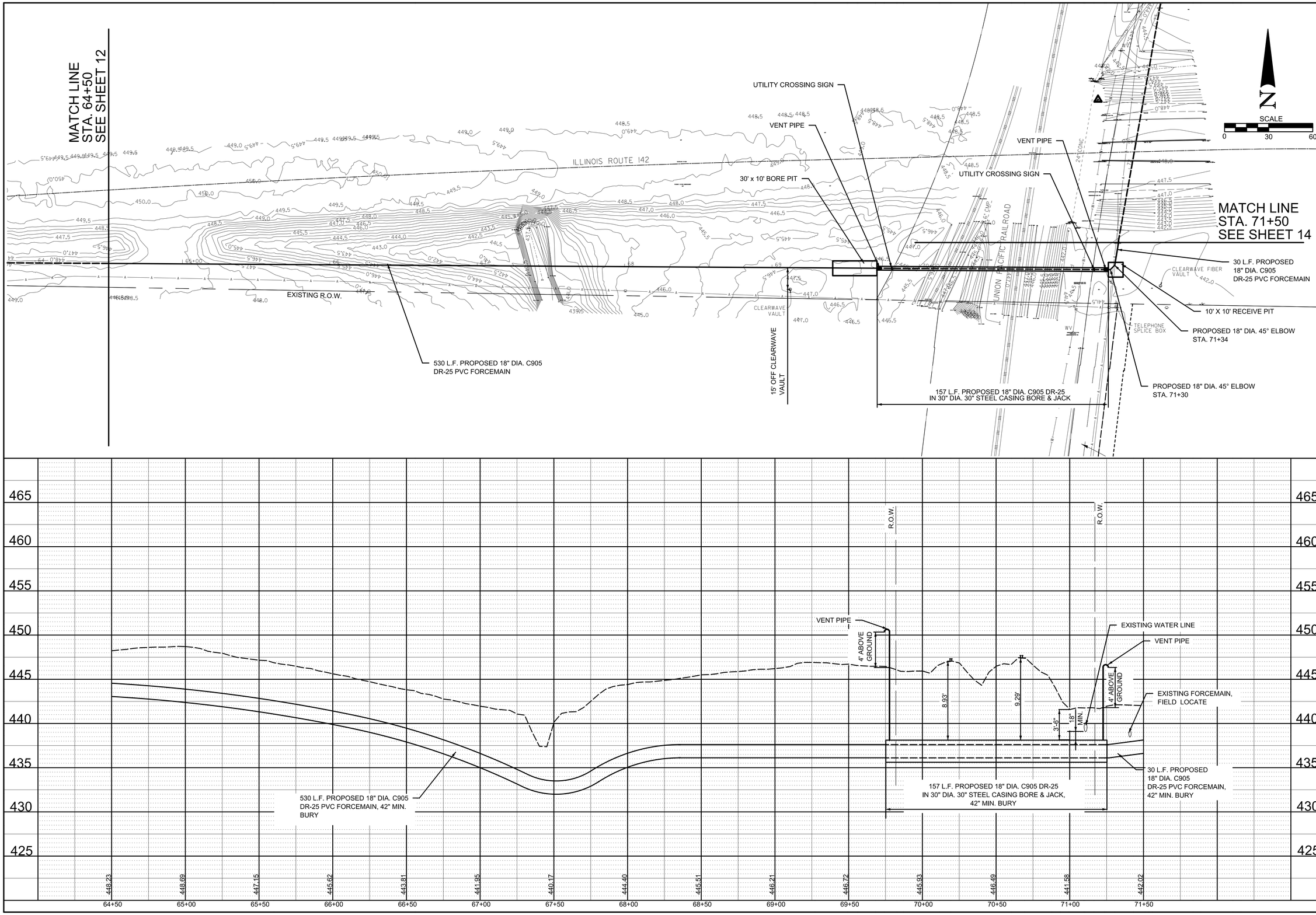

REVISIONS

PLOT DATE 03-20-20
DWG FILE 13_PROP FM_PLAN.DWG

PROPOSED FORCEMAIN PLAN & PROFILE

LIFT STATION #14 FORCEMAIN REPLACEMENT MOUNT VERNON, ILLINOIS

HMG ENGINEERS, INC.
9360 HOLY CROSS LANE
BREESE, ILLINOIS 62230
WWW.HMGENGINEERS.COM
(618) 526-9611

HMG Engineers • Surveyors

SURVEY	DJS/BMO
DESIGN	JDV
DRAWN	NJK
CHECKED	JAW
DATE	03-20

SHEET 13

JOB NO. 6694.2

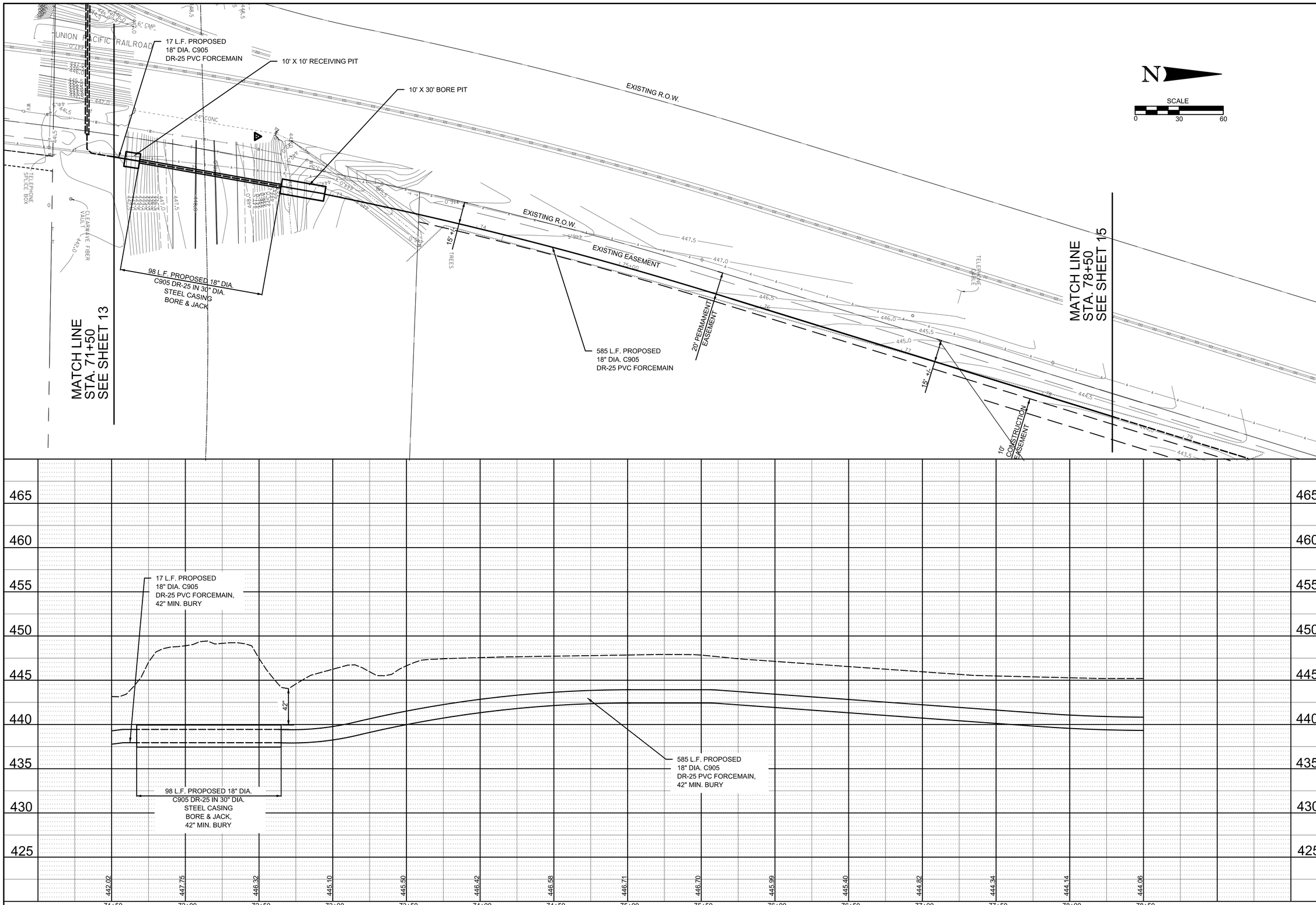

REVISIONS

PLOT DATE 06-19-19
DWG FILE 14_PROP FM-PMERGE.dwg

PROPOSED FORCEMAIN PLAN & PROFILE

LIFT STATION #14 FORCEMAIN REPLACEMENT MOUNT VERNON, ILLINOIS

HMG ENGINEERS, INC.
9360 HOLY CROSS LANE
BREESE, ILLINOIS 62230
WWW.HMGENGINEERS.COM
(618) 526-9611

HMG Engineers • Surveyors

SURVEY	DJS/BMO
DESIGN	JDV
DRAWN	NJK
CHECKED	JAW
DATE	06-19

SHEET 14

JOB NO. 6694.2

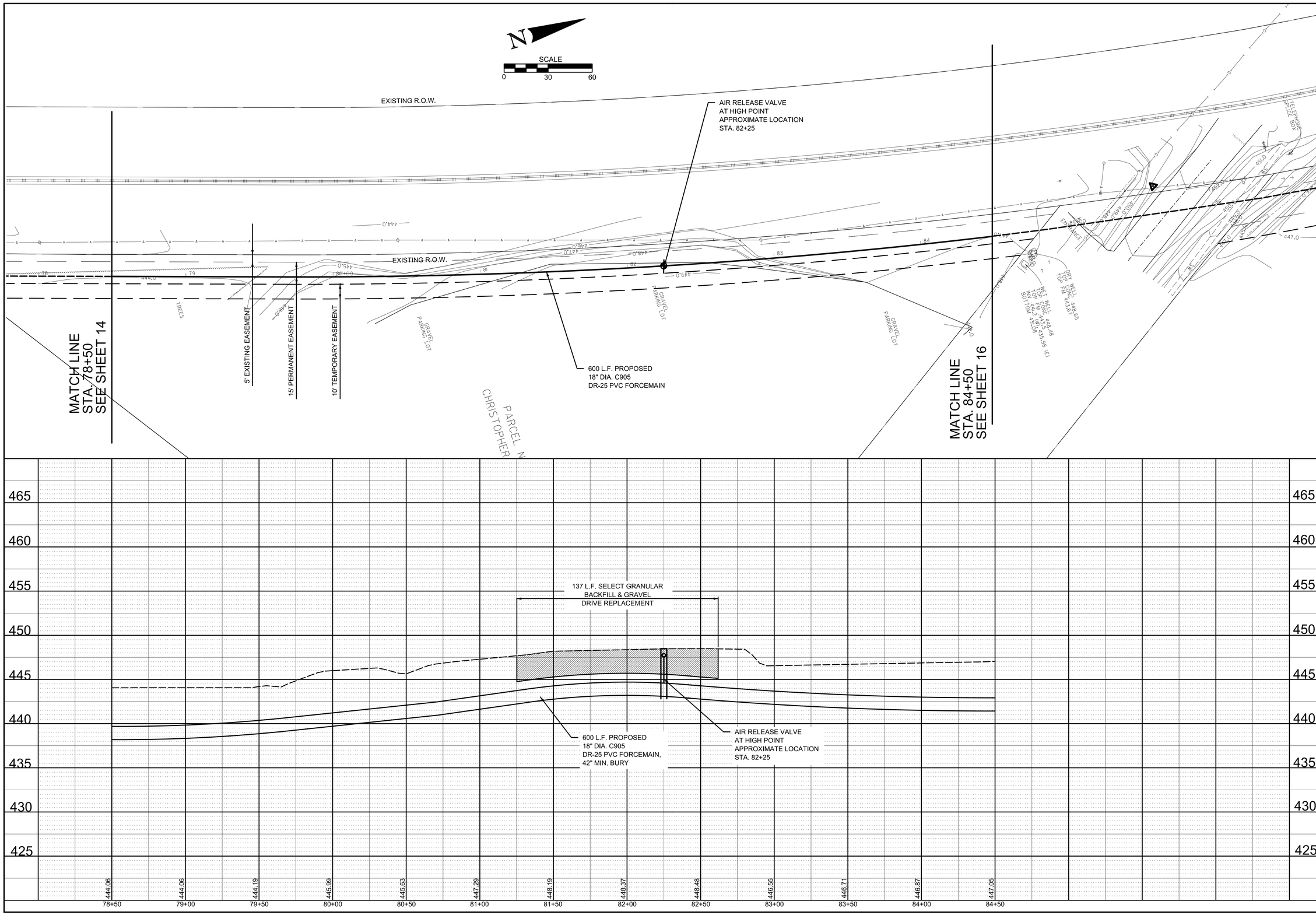

REVISIONS

PLOT DATE 06-21-19
DWG FILE 14_PROP FM, PLSPROF_6694

PROPOSED FORCEMAIN PLAN & PROFILE

LIFT STATION #14 FORCEMAIN REPLACEMENT MOUNT VERNON, ILLINOIS

HMG ENGINEERS, INC.
9360 HOLY CROSS LANE
BREESE, ILLINOIS 62230
WWW.HMGENGINEERS.COM
(618) 526-9611

HMG Engineers • Surveyors

SURVEY	DJS/BMO
DESIGN	JDV
DRAWN	NJK
CHECKED	JAW
DATE	06-19

SHEET 15

JOB NO. 6694.2

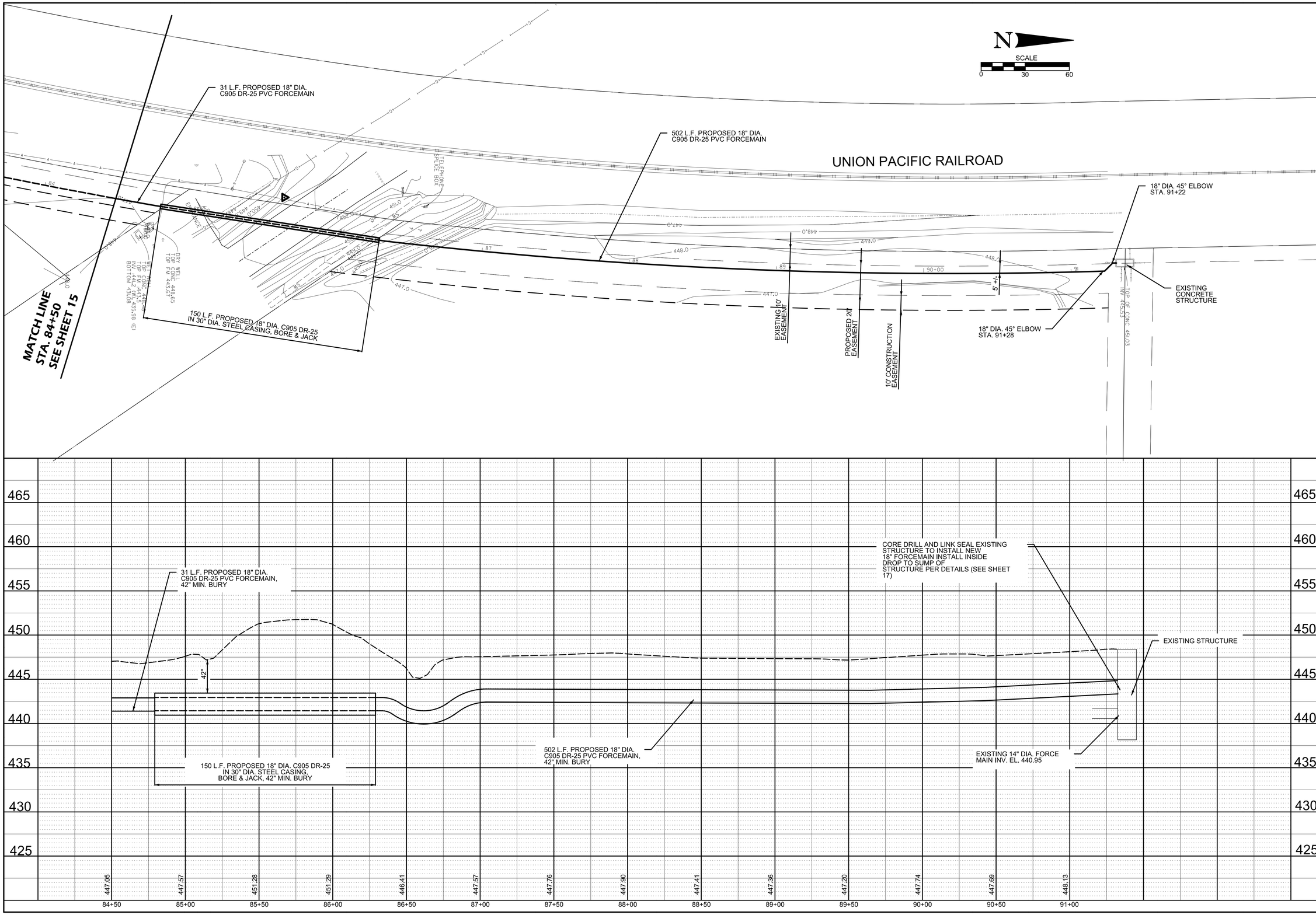

REVISIONS

PLOT DATE
09-21-19
DRAWFILE 6L-PROP FM-PLA-PROF_65-94

PROPOSED FORCEMAIN PLAN & PROFILE

LIFT STATION #14 FORCEMAIN REPLACEMENT MOUNT VERNON, ILLINOIS

HMG ENGINEERS, INC.
9360 HOLY CROSS LANE
BREESE, ILLINOIS 62230
WWW.HMGENGINEERS.COM
(618) 526-9611

HMG Engineers • Surveyors

SURVEY	DJS/BMO
DESIGN	JDV
DRAWN	NJK
CHECKED	JAW
DATE	06-19

SHEET 16

JOB NO. 6694.2

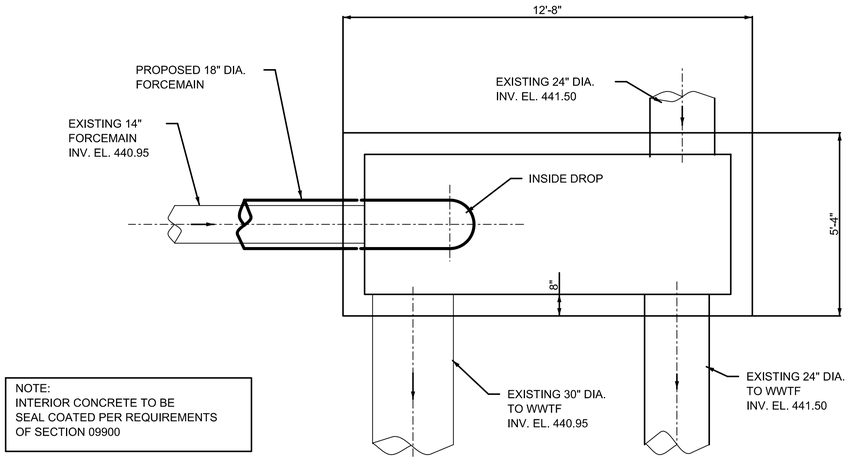

NOTE:
INTERIOR CONCRETE TO BE
SEAL COATED PER REQUIREMENTS
OF SECTION 09900

PLAN

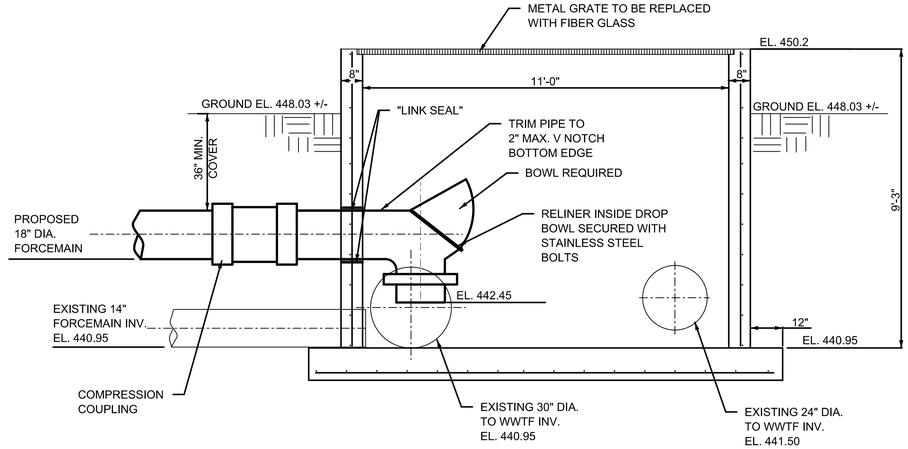

SECTION

EXISTING CONCRETE STRUCTURE

SCALE: NONE

REVISIONS

PLOT DATE
02-11-19
DWG FILE
17_STRCUTRE_6694

EXISTING STRUCTURE IMPROVEMENTS

**LIFT STATION #14
FORCEMAIN REPLACEMENT
MOUNT VERNON, ILLINOIS**

**HMG ENGINEERS, INC.
9360 HOLY CROSS LANE
BREESE, ILLINOIS 62230
(618) 526-9611
WWW.HMGENGINEERS.COM**

HMG Engineers • Surveyors

SURVEY	DJS/BMO
DESIGN	JDV
DRAWN	NJK
CHECKED	JAW
DATE	06-19

SHEET
17

JOB NO. 6694.2

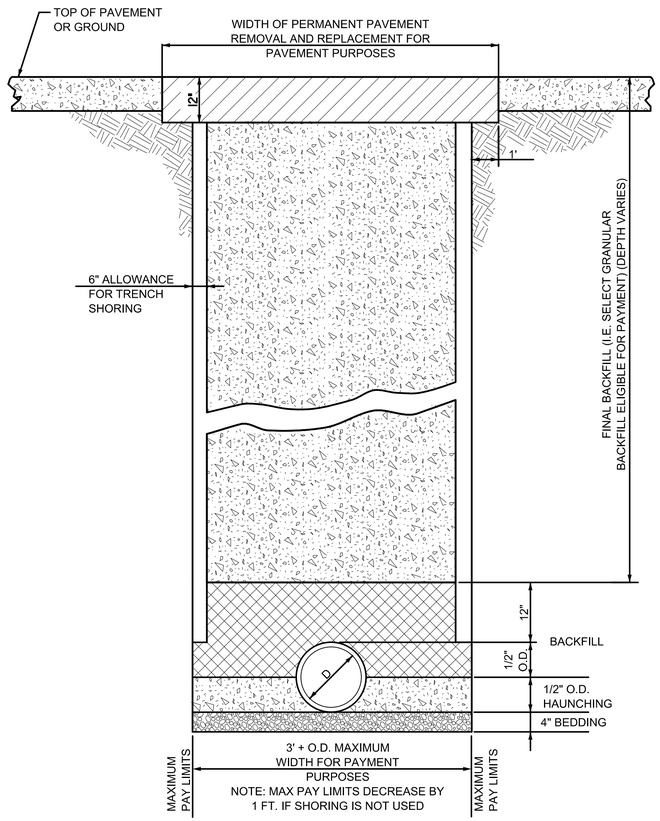

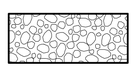

BEDDING
CA 7 REQUIRED IN ALL LOCATIONS WHERE THE EDGE OF THE SEWER MAIN AND/OR FORCEMAIN TRENCH IS LOCATED WITHIN TWO (2) FEET OF A PERMANENT SURFACE. (INCIDENTAL TO COST OF PIPE.)

HAUNCHING
CA 7 REQUIRED IN ALL LOCATIONS WHERE THE EDGE OF THE SEWER MAIN AND/OR FORCEMAIN TRENCH IS LOCATED WITHIN TWO (2) FEET OF A PERMANENT SURFACE. CASE I BACKFILL FREE FROM ORGANICS AT ALL OTHER LOCATIONS. (INCIDENTAL TO COST OF PIPE.)

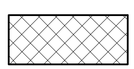

INITIAL BACKFILL
CA 7 REQUIRED IN ALL LOCATIONS WHERE THE EDGE OF THE SEWER MAIN AND/OR FORCEMAIN TRENCH IS LOCATED WITHIN TWO (2) FEET OF A PERMANENT SURFACE. CASE I BACKFILL FREE FROM ORGANICS AT ALL OTHER LOCATIONS. (INCIDENTAL TO COST OF PIPE.)

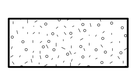

FINAL BACKFILL
CA 7 REQUIRED IN ALL LOCATIONS WHERE THE EDGE OF THE SEWER MAIN AND/OR FORCEMAIN TRENCH IS LOCATED WITHIN TWO (2) FEET OF A PERMANENT SURFACE EXCEPT TOP 12" TO BE CA-6. CASE I BACKFILL FREE FROM ORGANICS AT ALL OTHER LOCATIONS. (ELIGIBLE FOR PAYMENT)

TRENCHING DETAIL

GENERAL NOTES:

1. ALL EXCAVATION SHALL BE KEPT DEWATERED DURING CONSTRUCTION OPERATIONS UNTIL BACKFILL IS IN PLACE.
2. UTILITIES ARE SHOWN IN ACCORDANCE WITH THE BEST AVAILABLE INFORMATION AND THEIR TRUE LOCATION IS NO GUARANTEED TO BE SHOWN ON PLANS. CALL J.U.L.I.E. CONTRACTOR IS RESPONSIBLE FOR MAINTAINING EXISTING UTILITY SERVICES AS INCIDENTAL TO THE CONTRACT. THE CONTRACTOR SHALL ADJUST DEPTH AS NECESSARY TO AVOID EXISTING UTILITIES AND PROVIDE EXTENSIONS FOR VALVE BOXES, HYDRANTS, ETC. AS NECESSARY. NO ADDITIONAL COMPENSATION WILL BE ALLOWED FOR THIS WORK.
3. CONSTRUCTION OPERATIONS WILL BE REQUIRED ADJACENT TO PRIVATE PROPERTY. THE OWNER DOES NOT AND WILL NOT ASSUME RESPONSIBILITY FOR ANY DAMAGE TO PRIVATE PROPERTY. CLEANUP OF CONSTRUCTION AREAS IS CONSIDERED TO BE AN ESSENTIAL AND INCIDENTAL PART OF THE CONTRACT.
4. ALL WORK SHALL BE DONE IN ACCORDANCE WITH "STANDARD SPECIFICATIONS FOR WATER AND SEWER MAIN CONSTRUCTION IN ILLINOIS". CURRENT EDITION.
5. WATER AND SEWER MAIN SEPARATION WILL BE PER "STANDARD SPECIFICATIONS FOR WATER AND SEWER MAIN CONSTRUCTION IN ILLINOIS," CURRENT EDITION.
6. AIR TESTING AND DEFLECTION TESTING SHALL BE PERFORMED ACCORDING TO "STANDARD SPECIFICATIONS FOR WATER AND SEWER MAIN CONSTRUCTION IN ILLINOIS".

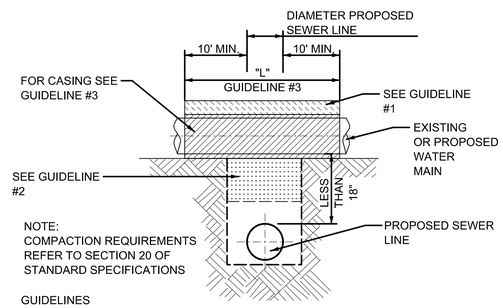

GUIDELINES

1. OMIT SELECT GRANULAR EMBEDMENT AND GRANULAR BACKFILL TO ONE FOOT OVER TOP OF WATER MAIN AND USE SELECT EXCAVATED MATERIAL (CLASS IV) AND COMPACT THE LENGTH OF "L".
2. IF SELECT GRANULAR BACKFILL EXISTS, REMOVE WITHIN WIDTH OF SEWER LINE TRENCH AND REPLACE WITH SELECT EXCAVATED MATERIAL (CLASS IV) AND COMPACT.
3. USE "L" FEET OF WATER MAIN MATERIAL FOR CASING OF EXISTING WATER MAIN AND SEAL ENDS OF CASING.
4. PROVED ADEQUATE SUPPORT FOR EXISTING WATER MAIN TO PREVENT DAMAGE DUE TO SETTLEMENT.

WATER MAIN ABOVE SEWER LINE WITH LESS THAN 18" VERITCAL SEPARATION

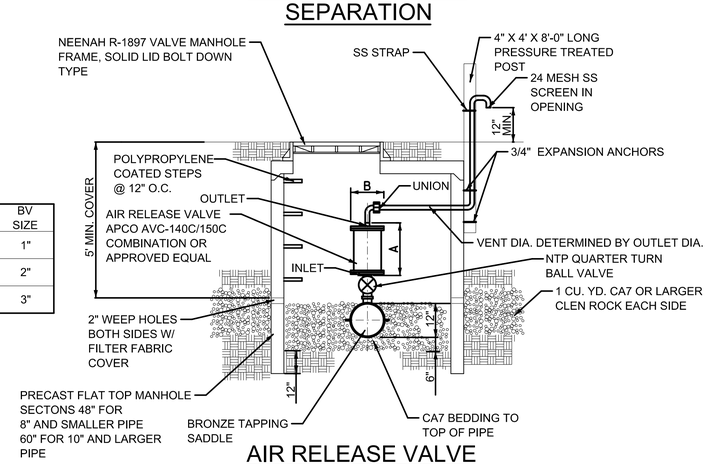

AIR RELEASE VALVE

INLET	OUTLET	A	B	BV SIZE
2" NPT	1" NPT	16 1/2"	7"	1"
2" NPT	2" NPT	19 3/4"	9 1/2"	2"
3" NPT	3" NPT	19 3/4"	9 1/2"	3"

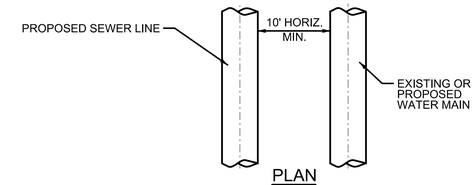

PLAN

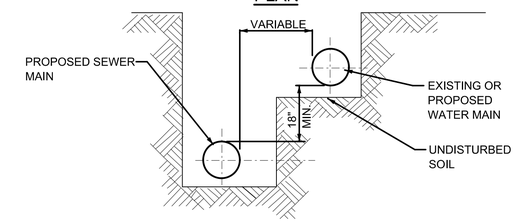

SECTION

NOTE:

1. WHEN EXISTING OR PROPOSED WATER MAIN IS LOCATED 10' OR MORE FROM PROPOSED SEWER LINE NO SPECIAL CONSTRUCTION REQUIRED.
2. IF HORIZONTAL SEPERATION BETWEEN EXISTING OR PROPOSED WATER MAIN & PROPOSED SEWER LINE IS LESS THAN 10' MIN., EXISTING OR PROPOSED WATER MAIN & PROPOSED SEWER LINE MUST BE SEPERATED 18" VERTICAL IN UNDISTURED SOIL.

HORIZONTAL SEPARATION

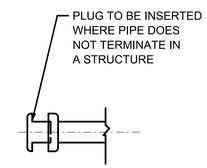

GRAVITY PLUG DETAIL

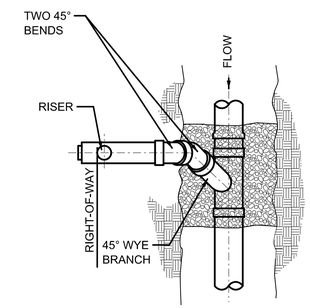

PLAN

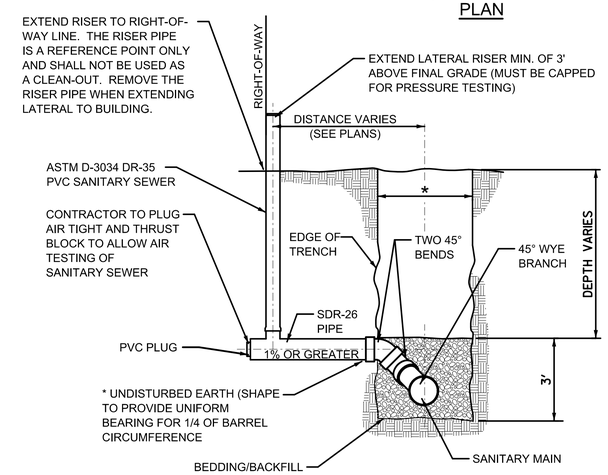

* SEE TRENCH DETAIL FOR BEDDING, HAUCHING, INITIAL, AND FINAL BACKFILL

SERVICE CONNECTION

REVISIONS

PLOT DATE 06-21-19
DWG FILE 18_lift sewr det sht 1 of 2_6694

TYPICAL SEWER DETAILS SHEET 1 OF 2

LIFT STATION #14 FORCEMAIN REPLACEMENT MOUNT VERNON, ILLIONIS

HMG ENGINEERS, INC.
9360 HOLY CROSS LANE
BREESE, ILLINOIS 62230
(618) 526-9611
WWW.HMGENGINEERS.COM

HMG Engineers • Surveyors

SURVEY	DJS/BMO
DESIGN	JDV
DRAWN	NJK
CHECKED	JAW
DATE	06-19

SHEET 18

JOB NO. 6694.2

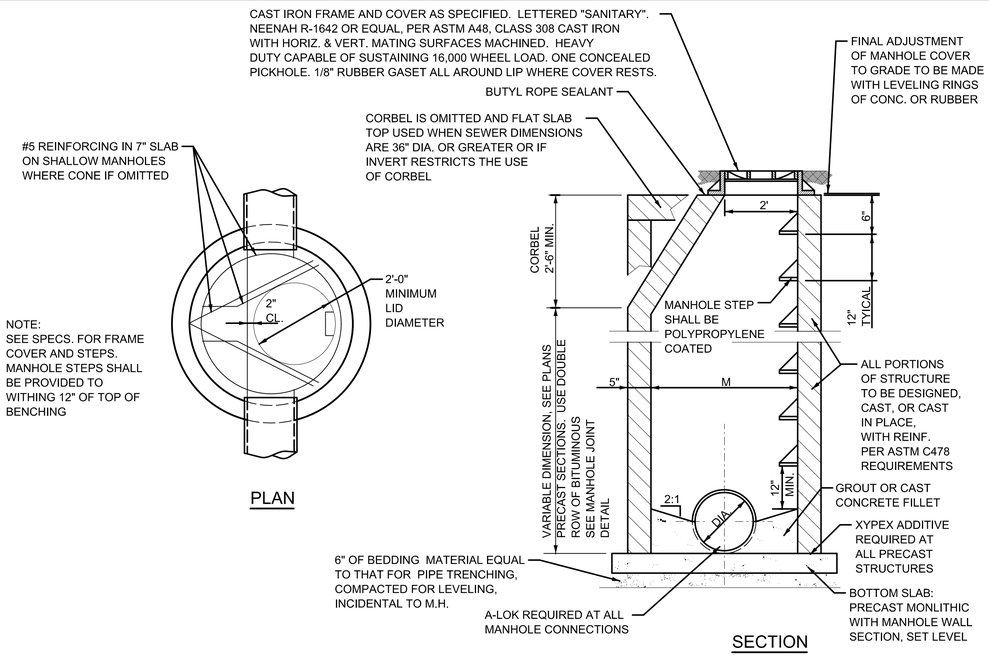

TYPICAL MANHOLE

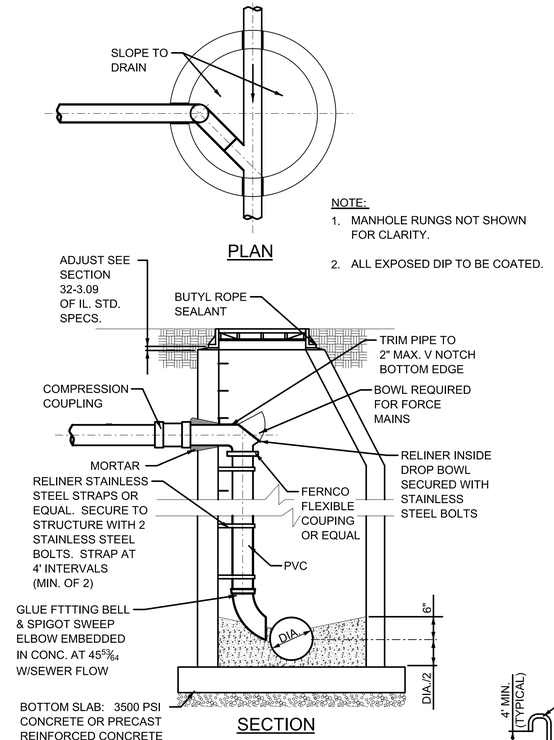

INSIDE DROP

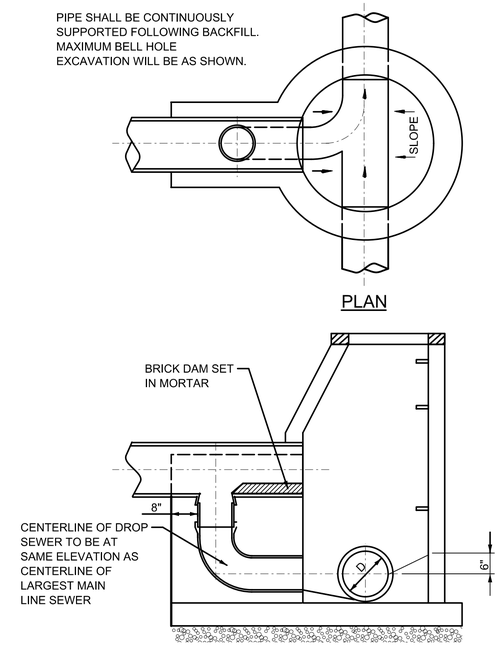

OUTSIDE DROP

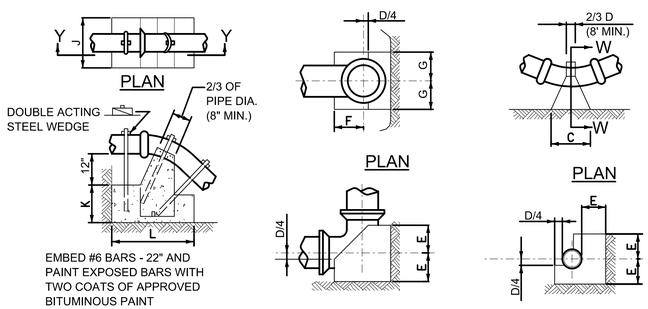

SECTION "Y-Y"
VERTICAL
1/16 & 1/8 BEND

ELEVATION
THRUST BLOCK FOR VERTICAL ELBOW

SECTION "W-W"
THRUST BLOCK FOR HORIZONTAL BEND

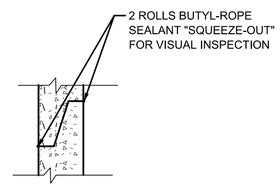

MANHOLE JOINT DETAILS

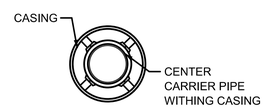

SINGLE CARRIER PIPE

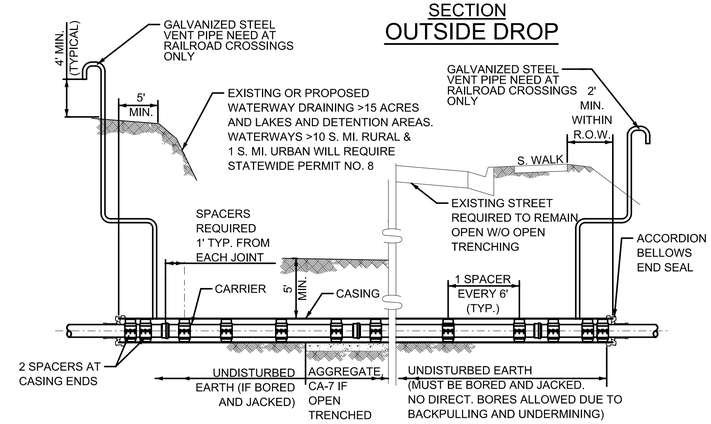

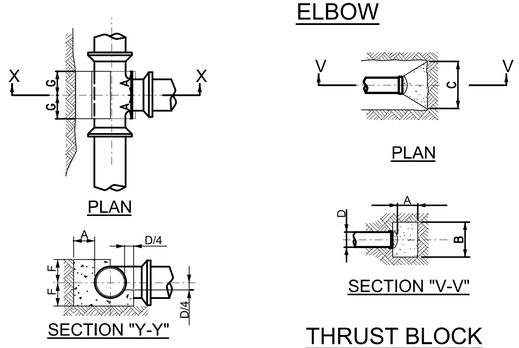

THRUST BLOCK FOR TEES

THRUST BLOCK FOR CAP

	THRUST BLOCK DIMENSIONS									
D	A	B	C	E	F	G	H	J	K	L
4" & 6"	1'-0"	1'-0"	1'-3"	1'-0"	1'-0"	1'-0"	3"	2'-6"	2'-6"	3'-0"
8"	1'-0"	1'-2"	1'-8"	1'-0"	1'-0"	1'-0"	3"	3'-0"	2'-9"	4'-0"
10"	1'-0"	1'-6"	2'-1"	1'-0"	1'-0"	1'-0"	3"	4'-0"	3'-0"	4'-6"
12"	1'-0"	1'-8"	2'-6"	1'-0"	1'-3"	1'-0"	3"	4'-6"	3'-6"	4'-9"
16"	1'-2"	2'-4"	3'-4"	1'-3"	1'-8"	1'-4"	4"	5'-2"	4'-0"	6'-6"
20"	1'-3"	3'-0"	4'-2"	1'-6"	2'-1"	1'-9"	4"	5'-6"	4'-9"	8'-0"
24"	1'-4"	3'-6"	5'-0"	1'-8"	2'-6"	2'-0"	5"	6'-0"	5'-6"	9'-6"

MINIMUM REQUIRED BEARING DIMENSIONS.

THRUST BLOCK DETAILS

NOTE:
CARRY CONCRETE TO SOLID GROUND

CARRIER PIPE DIA.	CASING PIPE DIA.
2"	4"
4"	8"
6"	10"
8"	16"
10"	20"
12"	24"

CASING PIPE:

ASTM A139, GRADE B, 35,000 PSI BURST PRESSURE STEEL, 18' MIN. LENGTHS, SOLID BUTT WELDS, MIN. 3/8" THICKNESS <36" O.D., MIN. 5/8" THICKNESS >36" O.D.; EXTERIOR COATED WITH COAL TAR EPOXY OR BITUM. ASPHALT.

AWWA C900 DR 25 PVC SHALL BE USED FOR WATER QUALITY CASING AS CALLED OUT IN PLANS.

CASING PIPE DIAMETER TO BE DETERMINED BY THE CARRIER PIPE DIAMETER AND THE REQUIRED END SEAL DIAMETERS BY PSI CORPORATION.

CARRIER PIPE:

SANITARY SEWER, BOTH GRAVITY AND FORCE MAIN, SHALL HAVE RESTRAINED JOINTS TO ALLOW FOR REMOVAL OF CARRIER PIPE, PER ASTM 2241. SDR 21, <14" NOM. DIAM. AND SDR 26 >14" NOM. DIAM. SHALL BE UTILIZED.

NOTE: SERVICE LATERALS SHALL REQUIRE SAME DETAILS AS FOR MAINS.

CASING SPACERS:

DUAL CASING SPACER SERIES CCS-08 BY CASCADE WATERWORKS MFG. OR EQUAL. SPACERS REQUIRED TO BE INSTALLED IN ALL CASINGS AS CALLED OUT IN PLANS.

ACCORDION-BELLOWS END SEAL:

MODEL "S" END SEALS BY PSI CORPORATION. NEOPRENE W/ S.S. WORM GEAR SCREW STAINLESS STEEL BANDS TO BE UTILIZED TO PREVENT CORROSION. END SEALS REQUIRED TO BE INSTALLED ON ALL CASINGS AS CALLED OUT IN PLANS.

CASING DETAIL
BORE & JACK, DIRECTONAL BORE & WATER QUALITY CASING REQUIREMENTS

REVISIONS

PLOT DATE 10-21-19
DWG FILE Fox 21-22 Zone.dgn
Jan 14, 2020 8:00AM

TYPICAL SEWER DETAILS SHEET 2 OF 2

LIFT STATION #14 FORCEMAIN REPLACEMENT MOUNT VERNON, ILLINOIS

HMG ENGINEERS, INC.
9360 HOLY CROSS LANE
BREESE, ILLINOIS 62230
WWW.HMGENGINEERS.COM
(618) 526-9611
HMG Engineers • Surveyors

SURVEY
DESIGN DJS/BMO
DRAWN JDV
CHECKED NJK
DATE JAW 06-19

SHEET 19

JOB NO. 6694.2